Genetic Structuring of Western Corn Rootworm (Coleoptera: Chrysomelidae) Populations in the United States Based on Microsatellite Loci Analysis

KYUNG SEOK KIM AND THOMAS W. SAPPINGTON[1]

USDA–ARS, CICGRU, Genetics Laboratory, Iowa State University, Ames, IA 50011

Environ. Entomol. 34(2): 494–503 (2005)

ABSTRACT The western corn rootworm (*Diabrotica virgifera virgifera* LeConte) (Coleoptera: Chrysomelidae) is a major corn insect pest in North America and is spreading in Europe. Seven polymorphic microsatellite loci were surveyed to characterize genetic structuring of *D. v. virgifera* populations, based on 595 individuals sampled from 10 locations across nine U.S. states (western Texas and Kansas to New York and Delaware). All populations showed high levels of genetic diversity, with mean allelic diversity ranging from 7.3 to 8.6, and mean expected heterozygosity ranging from 0.600 to 0.670. *D. v. virgifera* populations exhibited little genetic differentiation as a whole across the geographic range sampled, with a global F_{ST} of only 0.006. Pairwise F_{ST} estimates also revealed little genetic differentiation among populations. Most pairwise F_{ST} values were nonsignificant, except for those estimated between the Texas population and all others. There was a positive correlation between genetic distance and geographic distance as a whole, but no significant correlation for populations from Kansas to the east coast. There was no evidence for a genetic bottleneck in any *D. v. virgifera* population sampled. Phylogenetic and principal component analyses support the picture of high genetic similarity over much of the United States. Although high migration rates could produce the same pattern and cannot be ruled out, it seems more likely that the *D. v. virgifera* populations sampled have had insufficient time for substantial genetic structuring to develop since its recent eastward range expansion from the Great Plains that began ≈50 yr ago.

KEY WORDS *Diabrotica virgifera virgifera*, western corn rootworm, microsatellites, population genetics, genetic differentiation

THE WESTERN CORN ROOTWORM, *Diabrotica virgifera virgifera* LeConte, is a major pest of corn both in North America, where annual total losses in the United States can reach one billion dollars (Metcalf 1983, Levine and Oloumi-Sadeghi 1991, Levine et al. 2002), and now in Europe after its recent introduction (Baca 1994, Edwards et al. 1998, Hemerik et al. 2004). It has one generation per year, overwintering as diapausing eggs in the soil (Chiang 1973). Larvae emerge in the spring and feed on corn roots, leading to a decrease in yield (Spike and Tollefson 1991, Godfrey et al. 1993, Urías-López and Meinke 2001). This species is thought to be a native of the American tropics that spread into temperate North America as a specialist on cultivated corn beginning ≈1,000 yr ago (Smith 1966, Branson and Krysan 1981). Records of its distribution in North America were restricted to Nebraska, eastern Colorado, and northern Kansas until a dramatic eastward range expansion began in the mid-20th century (Chiang 1973, Metcalf 1983). It reached central Iowa by the mid-1960s, eastern Illinois by the late 1960s, western Ohio by the late 1970s, central Pennsylvania by the mid-1980s, and the east coast by ≈1990.

A number of circumstances have converged to make an understanding of *D. v. virgifera* population genetics a high priority. This insect has shown an ability to evolve resistance not only to insecticides (Meinke et al. 1998, Wright et al. 2000), but also to cultural practices. A crop rotation–resistant behavioral variant of *D. v. virgifera* recently evolved in eastern Illinois, and its geographic range is spreading (Onstad et al. 1999, Levine et al. 2002, O'Neal et al. 2002, Isard et al. 2004). The evolution of this variant has generated a great deal of concern about the origins of the rootworms that were introduced into Europe, where crop rotation is often the only viable management tool available for this pest.

In addition, transgenic corn hybrids are now commercially available that express a toxin from *Bacillus thuringiensis* (*Bt*) that confers resistance to rootworms (USEPA 2003). There is concern that the high selection pressure imposed by the *Bt* toxin will lead to insect resistance to the transgenic plants as well as to

Mention of trade names or commercial products in this article is solely for the purpose of providing specific information and does not imply recommendation or endorsement by the U.S. Department of Agriculture.

[1] Corresponding author, e-mail: tsapping@iastate.edu.

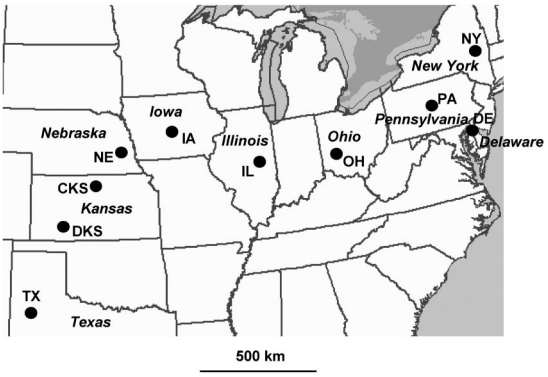

Fig. 1. Geographic locations of *D. v. virgifera* samples.

conventional *Bt* formulations used by organic farmers. Substantial efforts are being made to delay the development of resistance as long as possible through insect resistance management (IRM) strategies. IRM is based on the premise that the course and timing of pest evolution in response to selection through an insecticide can be predicted, monitored, manipulated, and mitigated. Our ability to successfully predict and model evolution in the corn rootworm requires a fundamental understanding of the ecological genetics of this insect. At the population level, IRM-related research questions include gene flow, temporal and spatial changes in allele frequency, invasion dynamics, and the genetic architecture of populations. Modeling of resistance evolution, pest management tactics, range expansion, and IRM strategies (Gould 1998, Onstad et al. 2003, Storer 2003) are disadvantaged by critical knowledge gaps in patterns and extent of effective dispersal in rootworms and definition of population dimensions. An estimate of gene flow derived from molecular markers can serve as an index of dispersal rates between populations (Kim and Sappington 2004a, b, Lowe et al. 2004).

There are a few reports of genetic variation within and among populations of *D. v. virgifera* (Krysan et al. 1989, Krafsur 1999, Szalanski et al. 1999). A phylogenetic study of *Diabrotica* species (Krysan et al. 1989) revealed low levels of allozyme variation as well as little genetic differentiation among 15 western corn rootworm populations. In an allozyme study of *D. v. virgifera* collected in Iowa, Krafsur (1999) found that only 7 of 36 allozyme loci were polymorphic, with a mean expected heterozygosity of only 0.048. Restriction fragment length polymorphism (RFLP) analysis revealed no polymorphisms in the nuclear rRNA ITS1 region of *D. v. virgifera* samples from South Dakota, Nebraska, and Indiana, and only 1 of 170 restriction sites observed in the mitochondrial DNA was significantly polymorphic (Szalanski et al. 1999). Thus, there is a need to employ more polymorphic markers to resolve subtle genetic differentiation between *D. v. virgifera* populations.

Microsatellites are highly polymorphic short tandem repeats of nuclear DNA, which can serve as codominant markers in population genetics studies (Parker et al. 1998). An organism can be genotyped relatively easily with an automated sequencer at multiple microsatellite loci after amplification by polymerase chain reaction (PCR). Microsatellite loci are generally the markers of choice for numerous applications in ecological genetics (Parker et al. 1998, Goldstein and Schlötterer 1999, Lowe et al. 2004), and are being applied increasingly in population studies of insects (e.g., Llewellyn et al. 2003, Brouat et al. 2004, Hufbauer et al. 2004). They are especially useful for studying population structure among closely related or recently diverged populations (Haig 1998, Donnelly and Townson 2000, Kim et al. 2001). We have isolated 25 polymorphic microsatellite loci from *D. v. virgifera* (Kim and Sappington 2005). Among the 17 markers characterized, there were 2–20 alleles per locus, with estimated heterozygosities of 0.229–0.881, in an Iowa population, indicating abundant variation suitable for population studies. In this study, we used a subset of these markers to evaluate the degree of genetic structuring among widely separated populations of *D. v. virgifera* in the United States, from western Kansas and Texas to New York and Delaware.

Materials and Methods

Sample Collection

Diabrotica virgifera virgifera adults were sampled from 10 widely separated geographic locations across nine U.S. states (Fig. 1.). Details of collectors and collection dates are shown in Table 1. At each location, adults of mixed sexes were collected by hand from corn plants and frozen. An exception was Delaware, where they were collected from squash plants.

Table 1. Locations of *D. v. virgifera* collections and corresponding abbreviations, sample sizes, collection dates, and collectors

Location	Abbreviation	Sample size	Collection date	Collector
New Deal, TX	TX	51	8–5–2004	Greg Cronholm (Texas Agricultural Extention Service)
Dodge City, KS	DKS	59	8–26–2003	Lee French (French Agricultural Research)
Concordia, KS	CKS	59	8–26–2003	Lee French (French Agricultural Research)
Mead, NE	NE	60	8–26–2003	Lance Meinke (University of Nebraska)
Ankeny, IA	IA	61	8–8–2003	Brendon Reardon (USDA, CICGRU)
Champaign, IL	IL	60	8–4–2003	Eli Levine (Illinois Natural History Survey)
Clark Co., OH	OH	61	8–20–2003	Bruce Eisley (Ohio State University)
Bellefonte, PA	PA	62	8–18–2003	Dennis Calvin (Pennsylvania State University)
Newark, DE	DE	61	7–23–2003	Joanne Whalen (University of Delaware)
Cobleskill, NY	NY	61	8–12–2003	Ken Wise (Cornell University)

Table 2. Characterization of seven microsatellite loci analyzed across all *D. v. virgifera* populations

Locus	Allele no. and size range (bp)	F_{IS}	F_{IT}	F_{ST}	G_{ST}	R_{ST}
DVV-D2	13 (178–210)	0.025	0.032	0.007***	0.013	0.004
DVV-D4	9 (221–241)	0.006	0.007	0.001**	0.009	0.006
DVV-D5	4 (169–177)	−0.043	−0.038	0.005***	0.010	0.006
DVV-D8	22 (211–253)	0.000	0.008	0.008***	0.014	0.000
DVV-D9	7 (129–153)	0.004	0.010	0.006***	0.013	0.007
DVV-D11	15 (171–213)	−0.001	0.008	0.008***	0.015	0.000
DVV-T2	6 (206–242)	0.019	0.023	0.003***	0.008	0.004
All loci	76	0.006*	0.011*	0.006***	0.012	0.004

Probability that value is different from zero: *not significant; **$P < 0.01$; ***$P < 0.001$.

Voucher specimens have been deposited in the Iowa State Insect Collection, Iowa State University, Ames, IA. Genomic DNA from the sampled rootworms is available from the authors by request.

Microsatellites

Of 17 polymorphic microsatellite markers developed for *D. v. virgifera* (Kim and Sappington 2005), 7 were used in this study (Table 2). These are all perfect dinucleotide repeats, except DVV-T2, which is a trinucleotide repeat. These markers showed Mendelian segregation in family analysis (10 families, 25 offspring per family) and were amplified by PCR in all *D. v. virgifera* individuals examined, indicating an apparent absence of null alleles. The loci were amplified from 51 to 62 individuals per location in multiplexed PCR reactions, and individuals were genotyped using a Beckman-Coulter CEQ 8000 Genetic Analysis System (Beckman Coulter, Inc., Fullerton, CA) using the methods described by Kim and Sappington (2005).

Data Analysis

Genetic Diversity Within Populations. Three indices of genetic diversity, allelic diversity (the mean number of alleles per locus), observed heterozygosity (H_O), and expected heterozygosity (H_E) under Hardy-Weinberg assumptions, were estimated for each locus using the GENETIX software package (Belkhir et al. 2000). To account for variation in sample sizes, allelic diversity was adjusted using both bootstrapping and jackknifing techniques implemented in the program AGARST (Harley 2001). Significant differences in allelic diversity among *D. v. virgifera* populations were assessed across all loci with the nonparametric Kruskal-Wallis test ($\alpha = 0.05$), corrected for experiment-wise error rate (Daniel 1990) using Statistix software (Analytical Software 1998). Evidence of linkage disequilibrium was assessed by the Fisher method for each locus pair across all populations using the genotype disequilibrium option implemented in the program GENEPOP (Raymond and Rousset 1995).

Population Differentiation. Three different estimators of population differentiation, G_{ST}, R_{ST}, and F_{ST}, were measured for each locus across all populations. G_{ST} and R_{ST} were calculated by the program AGARST, which allows for unequal population or sample numbers (Slatkin 1995). *F*-statistics (Weir and Cockerham 1984) and pairwise F_{ST}s were calculated using the program FSTAT (Goudet 1995). The sequential Bonferroni correction was applied in deriving significance levels for the analysis involving multiple comparisons (Rice 1989). For Hardy-Weinberg equilibrium (HWE) estimation, we followed the probability test approach (Guo and Thompson 1992) using the program GENEPOP (Raymond and Rousset 1995).

The relationship between $F_{ST}/(1 - F_{ST})$ and the geographic distance ($\log_{10}$ km) between populations was calculated using the MXCOMP option of NTSYSPC, version 1.70 software (Rohlf 1992). The significance of the log-linear association was tested through normalization by the Mantel statistic Z with 5,000 permutations of the data.

Genetic Relationship Analysis. Genetic divergence between populations based on allele frequencies was calculated as D_A genetic distance (Nei et al. 1983) using the DISPAN computer program (Ota 1993). The genetic distances were used to construct phylogenetic trees by neighbor-joining (NJ) clustering (Saitou and Nei 1987). Bootstrap resampling ($n = 1{,}000$) determined the most robust dendrogram topology. A principal component (PC) analysis was applied to a covariance matrix of allele frequencies across all loci using the program XLSTAT (Agresti 1990, Saporta 1991). The geometric relationship among *D. v. virgifera* populations was visualized with a scattergram of factor scores along the two PC axes that accounted for the most variation.

Population Bottleneck Tests. Evidence of recent population bottlenecks was assessed using the program BOTTLENECK 1.2 (Cornuet and Luikart 1996). We employed both a strict stepwise mutation model (SMM) (Kimura and Ohta 1978) and a two-phase model (TPM) (Di Rienzo et al. 1994) in which 90% of the microsatellite mutations followed the strict SMM and 10% produced multistep changes (see Estoup and Cornuet 1999). Wilcoxon sign-rank tests (Luikart et al. 1998a) were used to determine whether deviations of observed heterozygosity relative to that expected at drift-mutation equilibrium were significant ($\alpha = 0.05$). A mode-shift in allele frequency distribution was used as a qualitative indicator of population bottlenecks (Luikart et al. 1998b).

Table 3. Allelic diversity (AD), H_O, H_E at HWE, F_{IS} values, and *P* of HWE for *D. v. virgifera* populations over seven microsatellite loci

Location	AD[a]			H_E	H_O	F_{IS}	P^b
	DC	Bootstrap	Jackknife				
TX	8.6	8.0	8.6	0.670	0.678	−0.012	0.8387 (0)[c]
DKS	7.9	7.2	7.7	0.600	0.579	0.036	0.0597 (1)
CKS	7.7	7.1	7.6	0.629	0.625	0.006	0.0421 (1)
NE	8.0	7.3	7.8	0.607	0.631	−0.041	0.8527 (0)
IA	8.4	7.5	8.2	0.641	0.621	0.032	0.1369 (1)
IL	7.7	7.1	7.6	0.645	0.636	0.015	0.8130 (0)
OH	7.7	7.1	7.6	0.630	0.635	−0.008	0.1593 (1)
PA	8.0	7.2	7.8	0.646	0.636	0.016	0.9876 (0)
DE	7.3	6.7	7.1	0.623	0.609	0.024	0.0185 (1)
NY	7.9	7.1	7.6	0.632	0.642	−0.015	0.9309 (0)
Mean	7.9	7.2	7.8	0.632	0.629	0.006	0.1347 (5)

[a] Allelic diversity is given as a direct count (DC) of the average no. of observed alleles per locus and as bootstrap and jackknife estimates to account for sample size variation.
[b] Probability values using Fisher's method implemented by the program GENEPOP.
[c] Number in parentheses indicates the no. of loci showing a significant departure ($p < 0.05$) from HWE.

Results

Allele Frequencies and Genetic Diversity

A total of 76 alleles was detected across the seven *D. v. virgifera* microsatellite loci for 595 individuals analyzed (Table 2). The number of alleles per locus ranged from 4 in DVV-D5 to 22 in DVV-D8, with an average of 10.9. Ten of 76 alleles were unique to a location, but they occurred at very low frequency (mean frequency of private alleles = 0.0207). The highest frequency of a private allele, 0.09, was observed in the Texas population at the DVV-T2 locus. However, the frequency of most private alleles was <0.01.

F_{IS} estimates across all populations ranged from −0.043 to 0.025, and F_{IT} estimates ranged from −0.038 to 0.032 (Table 2). The global estimates of F_{IS} and F_{IT} across all loci and all populations were not significantly different from zero (Table 2). On average, populations exhibited a nonsignificant 0.6% deficiency of heterozygotes, and the total population exhibited a nonsignificant 1.1% heterozygote deficit.

Three measures of genetic differentiation (F_{ST}, G_{ST}, and R_{ST}) across all *D. v. virgifera* populations were similar, and very little genetic structuring was detected globally (Table 2). Although significant, the multi-locus F_{ST} estimate was only 0.006, indicating that very little of the total genetic variation was accounted for by population differences and that most of the variation was attributable to differences among individuals. When the Texas population, which is geographically closest to the presumed ancestral home range (Branson and Krysan 1981), was excluded, only two of seven loci revealed significant differentiation, with a global F_{ST} of 0.004 (data not shown). Thus, the observed significant genetic differentiation most likely can be attributed to differentiation of the Texas population from the others.

Allelic diversity, observed (H_O) and expected (H_E) heterozygosity, the inbreeding coefficient (F_{IS}), and *P* values for HWE were calculated over all loci for each *D. v. virgifera* population (Table 3). Uncorrected allelic diversity ranged from 7.3 (Delaware) to 8.6 (Texas), with an average of 7.9. Adjusted allelic diversity to account for sample size variation ranged from 6.7 to 8.0 in bootstrapping estimates and from 7.1 to 8.6 in jackknifing estimates, slightly lower than the uncorrected allelic diversity. Expected mean heterozygosity (H_E) was uniformly high across the United States, ranging from 0.600 (Dodge City, Kansas) to 0.670 (Texas), with an average of 0.632. Thus, the three related indices (allelic diversity, H_E, and H_O) indicated high levels of genetic diversity across all populations. The highest level of genetic diversity was detected in the Texas sample, which is expected of the population closest to the ancestral range. However, there were no significant differences in allelic diversity across locations (KW statistic = 0.5, $P > 0.9$).

In 70 instances, over all 10 populations and all seven loci, only five significant departures from HWE (Table 3) and three instances of significant heterozygote deficiency were detected. There was no significant deviation from HWE over all loci and all populations. Thus, mating within most *D. v. virgifera* populations across the central Corn Belt seems to be random. However, 2 (Concordia, Kansas and Delaware) of 10 populations showed significant departures from HWE, which were associated with positive F_{IS} values (Table 3), indicating deviation in the direction of heterozygote deficiency. These departures from HWE could be caused by a Wahlund effect, nonrandom sampling, inbreeding, or genetic drift (Castric et al. 2002, Lowe et al. 2004). Although the occurrence of a null allele cannot be ruled out as the cause for heterozygote deficits, family analysis and uniform amplification suggest that this is unlikely.

Finally, most locus pairs did not show significant evidence of linkage disequilibrium. However, the loci DVV-D2 and DVV-D11 were in significant ($P < 0.05$) linkage disequilibrium.

Gene Differentiation Among Populations

F_{ST} and its significance were calculated for each pair of populations (Weir and Cockerham 1984)

Table 4. Pairwise estimates of F_{ST} (Weir and Cockerham 1984) (above diagonal) and D_A genetic distance (Nei et al. 1983) (below diagonal) between locations

	TX	DKS	CKS	NE	IA	IL	OH	PA	DE	NY
TX	—	0.0141**	0.0140**	0.0132**	0.0125**	0.0196**	0.0117**	0.0176**	0.0201**	0.0178**
DKS	0.0655	—	0.0009	−0.0005	0.0046	0.0127	0.0007	0.0083	0.0058	0.006
CKS	0.0874	0.0248	—	0.0010	−0.0010	0.0081	−0.0001	0.0063	0.0053	0.0012
NE	0.0773	0.0211	0.0268	—	−0.0024	0.0080	−0.0005	0.0071	0.0086	−0.0001
IA	0.0668	0.0241	0.0214	0.0187	—	0.0009	−0.0023	0.0030	0.0037	−0.0024
IL	0.0783	0.0301	0.0344	0.0266	0.0193	—	0.0028	0.0103*	0.0127*	0.0073
OH	0.0736	0.0301	0.0309	0.0226	0.0191	0.0206	—	0.0019	0.0037	0.0006
PA	0.0802	0.0316	0.0315	0.0227	0.0221	0.0348	0.0271	—	0.0067	0.0022
DE	0.0858	0.0316	0.0325	0.0302	0.0281	0.0328	0.0288	0.0304	—	0.0044
NY	0.0928	0.0293	0.0245	0.0196	0.0225	0.0288	0.0290	0.0261	0.0234	—

Probability of being significantly different than zero after corrections for multiple comparisons: $*P < 0.05$; $**P < 0.01$.

(Table 4, above diagonal). F_{ST} estimates ranged from −0.0024 (Iowa versus Nebraska; Iowa versus New York) to 0.0201 (Texas versus Delaware). Nonsignificant and very low F_{ST}s were observed in most paired comparisons, revealing little genetic differentiation across the locations sampled. However, some comparisons were significant, most of which were detected between Texas and other populations. After corrections for multiple comparisons, F_{ST} values that differed significantly from zero were observed in Texas versus each other population and in Illinois versus Pennsylvania and Delaware. Indirect estimates of gene flow (Nm values) inferred from pairwise F_{ST}s (Wright 1969) were very high or indicated panmixis in most paired comparisons (data not shown).

Genetic distance inferred from $F_{ST}/(1 - F_{ST})$ was positively correlated with geographic distance between populations as a whole (Fig. 2A), suggesting that individuals from adjacent locations exchange genes more frequently than those from more distant locations. However, the geographic scale of this study was very large, ≈2,500 km between the Texas and New York locations. At this scale, one or two populations with high divergence from other homogeneous populations can skew the pattern of isolation by distance. In this study, the Texas population exhibited relatively high levels of genetic differentiation from all other populations, with an average pairwise F_{ST} of 0.0156. In contrast, when the Texas population was excluded, average pairwise F_{ST} estimates of other populations ranged from 0.0024 (between Delaware and others) to 0.0061 (between Pennsylvania and others). The relationship of genetic differentiation to geographic distance among these populations was not significant (Fig. 2B).

Genetic Relationships Among Populations

D_A genetic distances were calculated to infer genetic divergence among populations (Table 4; D_A below diagonal). The D_A values ranged from 0.0187 (Iowa versus Nebraska) to 0.0928 (Texas versus New York). The population sampled from Texas showed consistently high levels of genetic divergence with respect to other populations, as expected in populations closest to the presumed ancestral region.

To resolve phylogenetic relationships among populations, an NJ tree was reconstructed based on D_A genetic distances (Fig. 3). Apart from the far southwestern populations (Texas and Dodge City, Kansas), most populations were grouped into a single large clade with moderate bootstrap support of 63%. Within this clade, the Illinois and Ohio populations and New York and Delaware populations clustered together with bootstrap support of 57% and 55%, respectively, suggesting some differentiation in those regions. However, the low resolution of the tree further supports the overall genetic homogeneity of populations from northcentral Kansas to the Atlantic Coast.

Mean factor scores obtained from PC analysis were plotted along the first two PC axes, which to-

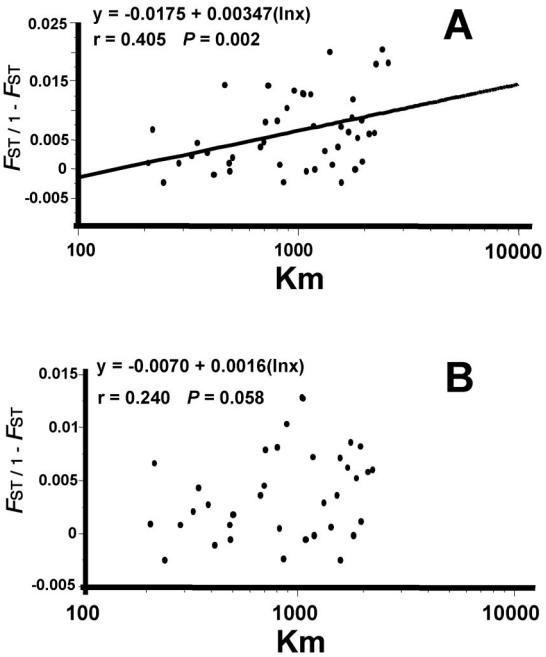

Fig. 2. Relationship of $F_{ST}/(1 - F_{ST})$ to geographic distance ($\log_{10}$ km). (A) All 10 *D. v. virgifera* populations included in the analysis, and (B) analysis excluding the Texas population.

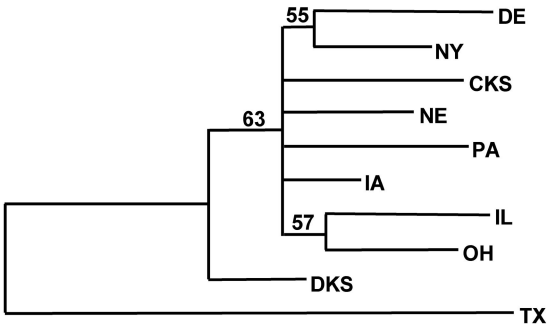

Fig. 3. Neighbor-joining dendrogram showing the genetic relationships among 10 *D. v. virgifera* populations based on D_A genetic distance (Nei et al. 1983). The numbers at the nodes are the percentage bootstrap values from 1,000 replications of resampled loci. Only nodes with at least 50% bootstrap support are shown.

gether accounted for 47% of the total variance in the covariance matrix (Fig. 4). The largest portion of the variance (28%) was accounted for by PC1. The scattergram generally supports the phylogenetic tree reconstructed from the genetic distance of Nei et al. The Texas population is clearly divergent from the other populations along the PC1 axis.

Although the Dodge City, Kansas and Illinois populations are somewhat isolated from the other populations, most populations across the central Corn Belt were clustered together.

Population Bottleneck Tests

Under both the SMM and TPM models of microsatellite mutation, Wilcoxon sign-rank tests revealed no evidence of excess heterozygosity relative to drift-mutation equilibrium in any *D. v. virgifera* population. Instead, significant heterozygote deficiencies were detected in nine populations under the SMM model and in two populations under the TPM model. There was no evidence of a mode shift in any population. As

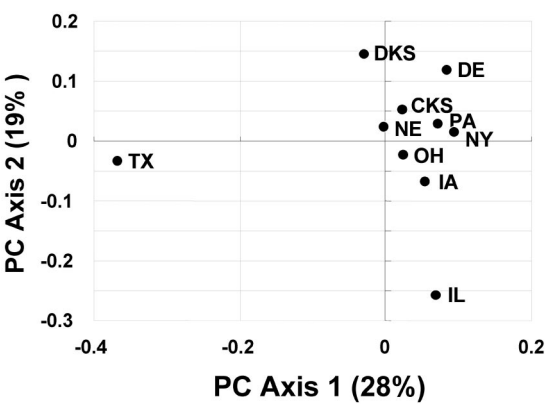

Fig. 4. Scatter diagram of factor scores for 10 *D. v. virgifera* populations derived from PC analysis of a covariance matrix of allele frequencies for seven microsatellites.

an independent assessment for bottleneck detection, we compared allelic diversity among populations with a Kruskal-Wallis test. Here, we considered the Texas population as a presumed ancestral population. None of the other populations differed significantly from the Texas population, again suggesting that these populations have not undergone bottlenecks.

Discussion

The seven microsatellite markers surveyed in this study showed a high degree of allelic and genetic diversity in all *D. v. virgifera* populations sampled across the United States, with little genetic structuring evident between these widely separated geographic populations. Even where pairwise comparisons of F_{ST}s were significantly different from zero, the calculated F_{ST}s were quite low. Thus, populations of *D. v. virgifera* across the central U.S. Corn Belt are genetically very similar. Our data suggest that this high genetic similarity is a historical reflection of the recent range expansion rather than because of genetic bottlenecks that might have arisen through founder effects during the species' spread eastward. It seems most plausible that the recent range expansion occurred along a broad front and that there has not yet been time for the populations to diverge genetically to any great degree. Alternatively, the observed genetic homogeneity could be maintained by high migration rates, but given what is known about rootworm dispersal distances, as discussed below, this seems unlikely.

The high rates of gene flow calculated from the F_{ST}s are probably an artifact of the range expansion rather than a true reflection of effective migration. Estimates in the literature of *D. v. virgifera* dispersal distances are variable. Coats et al. (1986) recorded a single flight of 24 km by a mated female on a laboratory flight mill. Metcalf (1983) estimated that *D. v. virgifera* expanded its range eastward across the United States by 40–115 km/yr, and Onstad et al. (1999) calculated from the same data that the rate of spread during 1963–1964 was 138 km/yr. Ruppel (1975) estimated a spread of 66–125 km/yr across Michigan and Ohio, and Balsbaugh (1980) suggested movement of 112 km by founder populations. However, Onstad et al. (1999) estimated that the rotation-resistant variety of *D. v. virgifera* was spreading from its origin in eastern Illinois at a rate of only 10–30 km/yr, and Hemerik et al. (2004) likewise reported a range expansion of 33.3 km/yr in Europe from its introduction site in Belgrade, Serbia. These estimates indicate only a modest dispersal capacity for this insect, which eventually should lead to isolation by distance across the larger total population, and indeed, we found evidence for such in our study (Fig. 2A). However, when the Texas population was excluded, there was no significant isolation by distance pattern from southern Kansas to New York, a distance of ≈2,200 km (Fig. 2B). Isolation by distance is predicted when a population is at or near equilibrium under its current patterns of dispersal (Slatkin 1993). Its absence in the case of *D. v. virgifera* in the central and northern United States suggests that

the total population may not be at equilibrium and that the paucity of genetic structuring may reflect the recent range expansion rather than current levels of gene flow (Slatkin 1993, Peterson and Denno 1998). Although our data and the apparent modest dispersal capacity of this insect are consistent with this conclusion, confirmation awaits additional studies specifically designed to characterize gene flow.

Our results concerning the present genetic status of *D. v. virgifera* populations are consistent with previous studies based on analyses of allozymes (Krysan et al. 1989, Krafsur 1999) and mtDNA PCR-RFLP (Szalanski et al. 1999). These studies consistently reported low genetic variation and minimal genetic differentiation within and between geographic *D. v. virgifera* populations. Although the microsatellite markers we surveyed in our study revealed much higher genetic diversity than allozymes and mtDNA, we found little genetic differentiation among populations across much of the United States. Despite the rapid range expansion, we found no evidence that the populations suffered a genetic bottleneck, a conclusion also reached by Krafsur (1999) based on allozyme surveys of South Dakota, Nebraska, and Indiana populations.

The Texas population was consistently differentiated genetically from all other populations sampled. Beetles were collected from a region in northern Texas that is thought to be part of a hybrid zone between the Mexican corn rootworm, *D. v. zeae* Krysan and Smith and *D. v. virgifera* (Krysan et al. 1980). There is unidirectional reproductive isolation between these subspecies mediated by the rickettsial bacterium *Wolbachia* infecting *D. v. virgifera,* which causes cytoplasmic incompatibility (Giordano et al. 1997), but the *D. v. virgifera* female × *D. v. zeae* male intersubspecific cross produces viable offspring (Krysan and Branson 1977). Thus, the genetic differentiation of the Texas population from all others sampled in this study may reflect, in part, introgression of genetic material from *D. v. zeae.*

Like all molecular markers used to characterize the genetic structuring of populations, microsatellites have certain shortcomings, so caution must be exercised when interpreting results. The most important of these are the common presence of null alleles and the possibility of size homoplasy, limitations that have been discussed in detail elsewhere (Estoup et al. 1995, Treuren 1998, Viard et al. 1998, Goldstein and Schlötterer 1999, Reece et al. 2004). Briefly, a null allele can arise from nucleotide sequence variation in a primer annealing site, which prevents amplification of that allele during PCR. Thus, a null allele goes undetected when individuals are genotyped at that locus, and those individuals are mistakenly assumed to be homozygous for the other allele. As a result, the presence of a null allele at a high enough frequency in a population can lead to a significant, but artifactual, departure from HWE in the direction of heterozygote deficiency. Although null alleles are not expected to affect the magnitude of measures of population differentiation, such as overall F_{ST} across all loci and all populations, they may impact their significance levels, as well as influence the magnitude of pairwise F_{ST} values because of erroneous allele frequency estimates. The probability of occurrence of null alleles is relatively high in insects because of the high mutation rate in this class of animals (Liewlaksaneeyanawin et al. 2002). Accordingly, checking for null alleles in microsatellites should be considered a prerequisite for their use in insect population studies.

A significant heterozygote deficiency is a warning sign that null alleles may be present, but this is not a fail safe indication because it can also arise from a Wahlund effect caused by population subdivision, inbreeding resulting from consanguineous mating, genetic drift, and/or selection (Lowe et al. 2004). If its frequency is high enough, a null allele also can be detected from the presence of nonamplifying individuals, presumably homozygous for one or more nulls. However, if controlled mating is possible, the most robust method to detect null alleles is through family analysis, employing a parentage test that assumes a Mendelian segregation ratio. We have checked for the presence of null alleles for many of the microsatellite markers we have developed (Kim and Sappington 2005), including the seven used in this study. These latter markers all displayed Mendelian segregation ratios in 10 families, and there is evidence of significant heterozygote deficiency in only a few isolated cases. These markers also amplified DNA from all 595 *D. v. virgifera* individuals examined. Taken together, the evidence suggests either that null alleles are not present in these markers or that they are present at very low frequencies.

Size homoplasy occurs when the same allele (i.e., the same number of simple repeats) is found in two different populations because of convergence through mutation (identity by state) rather than through common ancestry (identity by descent). This is particularly a problem with microsatellites because of their high mutation rate. In general, size homoplasy confounds evolutionary relationships among samples, the primary effect being to lessen estimates of genetic differentiation, which leads to inflated estimates of gene flow between populations. Size homoplasy is relatively frequent in distantly related populations with high levels of genetic differentiation (Estoup et al. 1995) and is more likely in a geographically widespread population with a long history of residence than in populations with only a short history of occupation. Thus, caution is required when one uses microsatellites to measure gene flow between distantly related populations or within a geographically large population with a long history of residence. In this study, the nominal degree of between-population genetic differentiation found in *D. v. virgifera* populations is not likely an artifact of size homoplasy in the microsatellites, because these populations were established during the range expansion that began only 50 yr ago, culminating in the eastern United States only 15 yr ago, leaving little time for homoplasy problems to arise. Ultimate resolution of this issue, however, will require comparison of the flanking sequences around apparently identical microsatellite alleles sampled

from the extremes of the range (e.g., Kansas versus New York). The presence of unique nucleotide substitutions in the more conserved flanking regions would suggest that two alleles have converged in state. Regardless, potential size homoplasy in these markers should not be a factor affecting future population genetic analyses conducted on finer geographic scales.

Taken together, the evidence suggests that the populations of *D. v. virgifera* sampled from Kansas to the east coast of the United States are slowly diverging genetically from a similar genetic starting point in the aftermath of the range expansion eastward from the Great Plains that began ≈50 yr ago. Consequently, characterizations of dispersal from gene flow estimates might be most robust when obtained from comparisons of populations from eastern Colorado and western Nebraska, where *D. v. virgifera* has a longer history of residence (Chiang 1973). Nevertheless, given the high genetic diversity among microsatellite loci, it should be possible to obtain good estimates of gene flow anywhere in the United States by examining temporal changes in allele frequencies (Wang and Whitlock 2003, Paetkau et al. 2004) or by employing spatial analyses on a finer geographic scale than what has been attempted so far.

Acknowledgments

We thank J. Gibson for excellent technical assistance, all those who collected western corn rootworms for this study, and J. Russo of ZedX for helping coordinate collections.

References Cited

Agresti, A. 1990. Categorical data analysis. Wiley Interscience, New York.

Analytical Software. 1998. Statistix for Windows: user's manual. Analytical Software, Tallahassee, FL.

Baca, F. 1994. New member of the harmful entomofauna of Yugoslavia, *Diabrotica virgifera virgifera* LeConte (Coleoptera, Chrysomelidae). Zastita Bilja. 45: 125–131.

Balsbaugh, E. U., Jr. 1980. New collection records of three rare species of flea beetles: *Distigmoptera faveolate Balsbaugh, D. texana* Blake, and *Alticia nancyae* Stirrett. J. Kansas Entomol. Soc. 53: 833–836.

Belkhir, K., P. Borsa, J. Goudet, L. Chikhi, and F. Bonhomme. 2000. GENETIX 4.02, logiciel sous WindowsTM pour la genetique des populations. Universite de Montpellier II, Montpellier, France.

Branson, T. F., and J. L. Krysan. 1981. Feeding and oviposition behavior and life cycle strategies of *Diabrotica:* an evolutionary view with implications for pest management. Environ. Entomol. 10: 826–831.

Brouat, C., H. Chevallier, S. Meusnier, T. Noblecourt, and J.-Y. Rasplus. 2004. Specialization and habitat: spatial and environmental effects on abundance and genetic diversity of forest generalist and specialist *Carabus* species. Mol. Ecol. 13: 1815–1826.

Castric, V., L. Bernatchez, K. Belkhir, and F. Bonhomme. 2002. Heterozygote deficiencies in small lacustrine populations of brook charr *Salvelinus Fontinalis* Mitchill (Pisces, Salmonidae): a test of alternative hypotheses. Heredity. 89: 27–35.

Chiang, H. C. 1973. Bionomics of the northern and western corn rootworms. Annu. Rev. Entomol. 18: 47–47.

Coats, S. A., J. J. Tollefson, and J. A. Mutchmor. 1986. Study of migratory flight in the western corn rootworm (Coleoptera: Chrysomelidae). Environ. Entomol. 15: 620–625.

Cornuet, J. M., and G. Luikart. 1996. Description and power analysis of two tests for detecting recent population bottlenecks from allele frequency data. Genetics. 144: 2001–2014.

Daniel, W. W. 1990. Applied nonparametric statistics. PWS-KENT Publishing, Boston, MA.

Di Rienzo, A., A. C. Peterson, J. C. Garza, A. M. Valdes, M. Slatkin, and N. B. Freimer. 1994. Mutational processes of simple-sequence repeat loci in human populations. Proc. Natl. Acad. Sci. U.S.A. 91: 3166–3170.

Donnelly, M. J., and H. Townson. 2000. Evidence for extensive genetic differentiation among populations of the malaria vector *Anopheles arabiensis* in Eastern Africa. Insect Mol. Biol. 9: 357–367.

Edwards, C. R., J. L. Barcic, H. K. Berger, H. Festic, J. Kiss, G. Princzinger, G.G.M. Schulten, and I. Vonica. 1998. Overview of the FAO western corn rootworm management program for central Europe. Pflanzenschutzberichte. 57: 3–14.

Estoup, A., and J. M. Cornuet. 1999. Microsatellite evolution: inferences from population data, pp. 49–65. *In* D. B. Goldstein, and C. Schlötterer (eds.) Microsatellites: evolution and applications. Oxford University Press, New York.

Estoup, A., C. Tailliez, J. M. Cornuet, and M. Solignac. 1995. Size homoplasy and mutational processes of interrupted microsatellites in two bee species, *Apis mellifera* and *Bombus terrestris* (Apidae). Mol. Biol. Evol. 12: 1074–1084.

Giordano, R., J. J. Jackson, and H. M. Robertson. 1997. The role of *Wolbachia* bacteria in reproductive incompatibilities and hybrid zones of *Diabrotica* beetles and *Gryllus* crickets. Proc. Natl. Acad. Sci. U.S.A. 94: 11439–11444.

Godfrey, L. D., L. J. Meinke, and R. J. Wright. 1993. Vegetative and reproductive biomass accumulation in field corn: response to root injury by western corn rootworm (Coleoptera: Chrysomelidae). J. Econ. Entomol. 86: 1557–1573.

Goldstein D. B., and C. Schlötterer. 1999. Microsatellites: evolution and applications. Oxford University Press, New York.

Goudet, J. 1995. FSTAT, version 1.2, a computer program to calculate F-statistics. J. Hered. 86: 485–486.

Gould, F. 1998. Sustainability of transgenic insecticidal cultivars: integrating pest genetics and ecology. Annu. Rev. Entomol. 43: 701–736.

Guo, S. W., and E. A. Thompson. 1992. Performing the exact test of Hardy-Weinberg proportion for multiple alleles. Biometrics. 48: 361–372.

Haig, S. M. 1998. Molecular contributions to conservation. Ecology. 79: 413–425.

Harley, E. H. 2001. AGARst. A programme for calculating allele frequencies, G_{ST} and R_{ST}, from microsatellite data, version 2. University of Cape Town, Cape Town, South Africa.

Hemerik, L., C. Busstra, and P. Mols. 2004. Predicting the temperature-dependent natural population expansion of the western corn rootworm, *Diabrotica virgifera.* Entomol. Exp. Appl. 111: 59–69.

Hufbauer, R. A., S. M. Bogdanowicz, and R. G. Harrison. 2004. The population genetics of a biological control introduction: mitochondrial DNA and microsatellite variation in native and introduced populations of *Aphidus ervi,* a parisitoid wasp. Mol. Ecol. 13: 337–348.

Isard, S. A., J. L. Spencer, T. R. Mabry, and E. Levine. 2004. Influence of atmospheric conditions on high-elevation flight of western corn rootworm (Coleoptera: Chrysomelidae). Environ. Entomol. 33: 650–656.

Kim, K. S., and T. W. Sappington. 2004a. Boll weevil (*Anthonomus grandis,* Boheman) (Coleoptera: Curculionidae) dispersal in the southern United States: evidence from mitochondrial DNA variation. Environ. Entomol. 33: 457–470.

Kim, K. S., and T. W. Sappington. 2004b. Genetic structuring of boll weevil populations in the U.S. based on RAPD markers. Insect Mol. Biol. 13: 293–303.

Kim, K. S., and T. W. Sappington. 2005. Polymorphic microsatellite loci from the western corn rootworm (Insecta: Coleoptera: Chrysomelidae) and cross-amplification with other *Diabrotica* spp. Mol. Ecol. Notes. 5: 115–117.

Kim, K. S., Y. Tanabe, C. K. Park, and J. H. Ha. 2001. Genetic variability in East Asian dogs using microsatellite loci analysis. J. Hered. 92: 398–403.

Kimura, M., and T. Ohta. 1978. Stepwise mutation model and distribution of allelic frequencies in a finite population. Proc. Natl. Acad. Sci. U.S.A. 75: 2868–72.

Krafsur, E. S. 1999. Allozyme gene diversities in some leaf beetles (Coleoptera: Chrysomelidae). Biochem. Genet. 37: 215–226.

Krysan, J. L., and T. F. Branson. 1977. Inheritance of diapause intensity in western corn rootworm, *Diabrotica virgifera.* J. Hered. 68: 415–417.

Krysan, J. L., R. F. Smith, T. F. Branson, and P. L. Guss. 1980. A new subspecies of *Diabrotica virgifera* (Coleoptera: Chrysomelidae): description, distribution and sexual compatibility. Ann. Entomol. Soc. Am. 76: 197–202.

Krysan, J. L., I. C. McDonald, and J. H. Tumlinson. 1989. Phenogram based on allozymes and its relationship to classical biosystematics and pheromone structure among eleven diabroticites (Coleoptera: Chrysomelidae). Ann. Entomol. Soc. Am. 82: 574–581.

Levine, E., and H. Oloumi-Sadeghi. 1991. Management of diabroticite rootworms in corn. Annu. Rev. Entomol. 36: 229–255.

Levine, E., J. L. Spencer, S. A. Isard, D. W. Onstad, and M. E. Gray. 2002. Adaptation of the western corn rootworm to crop rotation: evolution of a new strain in response to a management practice. Am. Entomol. 48: 94–107.

Liewlaksaneeyanawin, C., C. E. Ritland, and Y. A. El-Kassaby. 2002. Inheritance of null alleles for microsatellites in the white pine weevil (*Pissodes strobi* [Peck] [Coleoptera: Curculionidae]). J. Hered. 93: 67–70.

Llewellyn, K. S., H. D. Loxdale, R. Harrington, C. P. Brookes, S. J. Clark, and P. Sunnucks. 2003. Migration and genetic structure of the grain aphid (*Sitobion avenae*) in Britain related to climate and clonal fluctuation as revealed using microsatellites. Mol. Ecol. 12: 21–34.

Lowe, A., S. Harris, and P. Ashton. 2004. Ecological genetics: design, analysis, and application. Blackwell, Malden, MA.

Luikart, G., W. B. Sherwin, B. M. Steele, and F. W. Allendorf. 1998a. Usefulness of molecular markers for detecting population bottlenecks via monitoring genetic change. Mol. Ecol. 7: 963–974.

Luikart, G., F. W. Allendorf, J. M. Cornuet, and B. Sherwin. 1998b. Distortion of allele frequency distributions provides a test for recent population bottlenecks. J. Hered. 89: 238–247.

Meinke, L. J., B. D. Siegfried, R. J. Wright, and L. D. Chandler. 1998. Adult susceptibility of Nebraska western corn rootworm (Coleoptera: Chrysomelidae) populations to selected insecticides. J. Econ. Entomol. 91: 594–600.

Metcalf, R. L. 1983. Implications and prognosis of resistance to insecticides, pp. 703–733. *In* G. P. Georghiou, and T. Saito (eds.), Pest resistance to pesticides. Plenum, New York.

Nei, M., F. Tajima, and Y. Tateno. 1983. Accuracy of estimated phylogenetic trees from molecular data. J. Mol. Evol. 19: 153–170.

O'Neal, M. E., C. D. DiFonzo, and D. A. Landis. 2002. Western corn rootworm (Coleoptera: Chrysomelidae) feeding on corn and soybean leaves affected by corn phenology. Environ. Entomol. 31: 285–292.

Onstad, D. W., M. G. Joselyn, S. A. Isard, E. Levine, J. L. Spencer, L. W. Bledsoe, C. R. Edwards, C. D. DiFonzo, and H. Willson. 1999. Modeling the spread of western corn rootworm (Coleoptera: Chrysomelidae) populations adapting to soybean-corn rotation. Environ. Entomol. 28: 188–194.

Onstad, D. W., D. W. Crowder, P. D. Mitchell, C. A. Guse, J. L. Spencer, E. Levine, and M. E. Gray. 2003. Economics versus alleles: balancing integrated pest management and insect resistance management for rotation-resistant western corn rootworm (Coleoptera: Chrysomelidae). J. Econ. Entomol. 96: 1872–1885.

Ota, T. 1993. DISPAN, genetic distance and phylogenetic analysis. Institute of Molecular Evolutionary Genetics, Pennsylvania State University, State College, PA.

Paetkau, D., R. Slade, M. Burden, and A. Estoup. 2004. Genetic assignment methods for the direct, real-time estimation of migration rate: a simulation-based exploration of accuracy and power. Mol. Ecol. 13: 55–65.

Parker, P. G., A. A. Snow, M. D. Schug, G. C. Booton, and P. A. Fuerst. 1998. What molecules can tell us about populations: choosing and using a molecular marker. Ecology. 79: 361–382.

Peterson, M. A., and R. F. Denno. 1998. The influence of dispersal and diet breadth on patterns of genetic isolation by distance in phytophagous insects. Am. Nature. 152: 428–446.

Raymond, M., and F. Rousset. 1995. GENEPOP (version 1.2): population genetics software for exact tests and ecumenicism. J. Hered. 86: 248–249.

Reece, K. S., W. L. Ribeiro, P. M. Gaffney, R. B. Carnegie, and S. K. Allen. 2004. Microsatellite marker development and analysis in the eastern oyster (*Crassostrea virginica*): confirmation of null alleles and non-Mendelian segregation ratios. J. Hered. 95: 346–352.

Rice, W. R. 1989. Analyzing tables of statistical tests. Evolution. 43: 223–225.

Rohlf, F. J. 1992. NTSYS-PC numerical taxonomy and multivariate analysis system, version 1.70. Exeter Publishers, Setauket, NY.

Ruppel, R. F. 1975. Dispersal of western corn rootworm, *Diabrotica virgifera* LeConte, in Michigan (Coleoptera: Chrysomelidae). J. Kansas Entomol. Soc. 48: 291–296.

Saitou, N., and M. Nei. 1987. The neighbor-joining method: a new method for reconstructing phylogenetic tree. Mol. Biol. Evol. 4: 406–425.

Saporta, G. 1991. Probability, analyse de donnis et statistiques. Technip, Paris, France.

Slatkin, M. 1993. Isolation by distance in equilibrium and non-equilibrium populations. Evolution. 47: 264–279.

Slatkin, M. 1995. A measure of population subdivision based on microsatellite allele frequencies. Genetics. 139: 457–462.

Smith, R. F. 1966. Distributional patterns of selected western North American insects: the distribution of di-

abroticites in western North America. Bull. Entomol. Soc. Am. 12: 108–110.

Spike, B. P., and J. J. Tollefson. 1991. Yield response of corn subjected to western corn rootworm (Coleoptera: Chrysomelidae) infestation and lodging. J. Econ. Entomol. 84: 1585–1590.

Storer, N. P. 2003. A spatially explicit model simulating western corn rootworm (Coleoptera: Chrysomelidae) adaptation to insect-resistant maize. J. Econ. Entomol. 96: 1530–1547.

Szalanski, A. L., R. L. Roehrdanz, D. B. Taylor, and L. Chandler. 1999. Genetic variation in geographical populations of western and Mexican corn rootworm. Insect Mol. Biol. 8: 519–526.

Treuren, R. V. 1998. Estimating null allele frequencies at a microsatellite locus in the oystercatcher (*Haematopus ostralegus*). Mol. Ecol. 7: 1413–1417.

Urías-López, M. A., and L. J. Meinke. 2001. Influence of western corn rootworm (Coleoptera: Chrysomelidae) larval injury on yield of different types of maize. J. Econ. Entomol. 94: 106–111.

U.S. Environmental Protection Agency [USEPA]. 2003. *Bacillus thuringiensis* Cry3Bb1 Protein and the genetic material necessary for its production (Vector ZMIR13L) in event MON863 corn (006484) fact sheet. http://www.epa.gov/pesticides/biopesticides/ingredients/factsheets/factsheet_006484.htm.

Viard, F., P. Franck, M. P. Dubois, A. Estoup, and P. Jarne. 1998. Variation of microsatellite size homoplasy across electromorphs, loci, and populations in three invertebrate species. J. Mol. Evol. 47: 42–51.

Wang, J., and M. C. Whitlock. 2003. Estimating effective population size and migration rates from genetic samples over space and time. Genetics. 163: 429–446.

Weir, B. S., and C. C. Cockerham. 1984. Estimating F-statistics for the analysis of population structure. Evolution. 38: 1358–1370.

Wright, R. J., M. E. Scharf, L. J. Meinke, X. Zhou, B. D. Siegfried, and L. D. Chandler. 2000. Larval susceptibility of an insecticide-resistant western corn rootworm (Coleoptera: Chrysomelidae) population to soil insecticides: laboratory bioassays, assays of detoxification enzymes, and field performance. J. Econ. Entomol. 93: 7–13.

Wright S. 1969. Evolution and genetics of populations, vol. 2. University of Chicago Press, Chicago, IL.

Received for publication 29 November 2004; accepted 13 January 2005.