1 Ag84Te

Agriculture

Economic
Research
Service

Technical
Bulletin
Number 1762

An Economic Analysis of Electron Accelerators and Cobalt-60 for Irradiating Food

Rosanna Mentzer Morrison

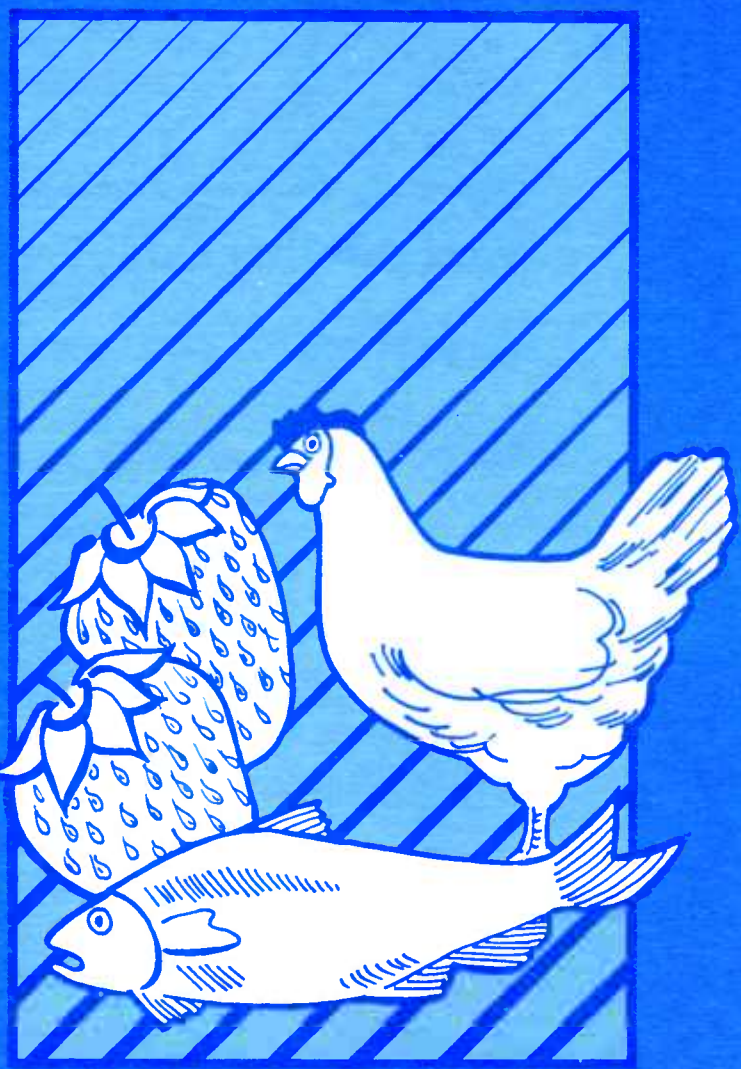

Want Another Copy? It's Easy.

Just dial 1-800-999-6779. Toll free.

Ask for *An Economic Analysis of Electron Accelerators and Cobalt-60 for Irradiating Food* (TB-1762)

The cost is $5.50 per copy. For non-U.S. addresses, add 25 percent (includes Canada). Charge your purchase to your VISA or MasterCard, or we can bill you. Or send a check or purchase order (made payable to ERS-NASS) to:

ERS-NASS
P.O. Box 1608
Rockville, MD 20850.

We'll fill your order by first-class mail.

An Economic Analysis of Electron Accelerators and Cobalt-60 for Irradiating Food.
By Rosanna Mentzer Morrison, Commodity Economics Division, Economic Research Service, U.S. Department of Agriculture. Technical Bulletin No. 1762.

Abstract

Average costs per pound of irradiating food are similar for the electron accelerator and cobalt-60 irradiators analyzed in this study, but initial investment costs can vary by $1 million. Irradiation costs range from 0.5 to 7 cents per pound and decrease as annual volumes treated increase. Cobalt-60 is less expensive than electron beams for annual volumes below 50 million pounds. For radiation source requirements above the equivalent of 1 million curies of cobalt-60, electron beams are more economical.

Keywords: Food irradiation; electron accelerators; cobalt-60; cost comparison; economies of size.

Use of company names is for identification only and does not constitute endorsement by the U.S. Department of Agriculture.

1301 New York Avenue, NW.
Washington, DC 20005-4788

June 1989

Acknowledgments

The author thanks the following individuals for providing technical information and critiques:

Joseph McKeown
Atomic Energy of Canada, Limited
Chalk River, Ontario, Canada

Anthony J. Berejka
Huntington, New York

Theo Sadat
CGR MeV
Buc, France

Franklin C. Ford
Ford Laboratories, Inc.
Dublin, California

Jacob Haimson
Haimson Research Corp.
Palo Alto, California

James H. Bly
Marshall R. Cleland
Radiation Dynamics, Inc.
Melville, New York

Francois Erhart
SGN
Cedex, France

Winton B. Boone
Craig S. Nunan
Varian
Palo Alto, California

The author also thanks the following reviewers: Raymond Folwell, University of Washington; J. William Levedahl, ERS; John Malone, Pennsylvania State University; Tanya Roberts, ERS; and David Smallwood, ERS. I thank Kyra Toland-Jordan for typing the manuscript, Sara L. Wampler for editing, and Nadine Loften for composition.

Contents

Summary v

Introduction 1
What is Food Irradiation? 1
Why the Interest in Machine Irradiators? 3

Types of Machines and Their Uses 4
DC Accelerators 6
RF Linear Accelerators 6
Conversion to X rays 7

Selected Applications and Throughputs 8

Technical and Economic Assumptions 9
Capital Costs 9
Operating Costs 11
Processing Schedules 12
Calculating an Annual Charge for Fixed and Variable Costs 12

Cost Analysis and Economies of Size 13
Sources of Size Economies 14
Comparison With Cobalt-60 Irradiators 17
Treatment of Seasonal Products 20

Conclusions 21

References 24

Appendix A—Definitions and Assumptions
For Machine Irradiators 26

Appendix B—Definitions and Assumptions for Cobalt-60 Irradiators 28

Appendix Tables 31

Summary

The U.S. Food and Drug Administration permits three types of ionizing radiation to be used on foods: gamma rays from radioactive cobalt-60 or cesium-137, high-energy electrons, and x rays. The latter two types of radiation are produced by electron accelerators powered by electricity. On the molecular level, these three types of radiation have similar effects. However, they have different properties that affect their technical, social, and economic desirability.

One of the most important technical differences relates to penetration. Gamma rays from cobalt-60 and cesium-137 and x rays can readily penetrate pallet loads of foods. Electrons of the allowed energy levels cannot penetrate more than 1 to 3 inches, depending on the food's density, when irradiated from one side. The limited penetration of electron beams restricts their use to treating the surface of foods or foods in individual, thin packages or a shallow stream of grains, powders, or liquids. An irradiator using electron beams must be part of a processing or packing plant to treat the food before it is packed for shipping.

This study estimates the cost of using an electron accelerator and a cobalt-60 irradiator to irradiate selected foods in facilities of various sizes. Average costs per pound of irradiating food are similar for the two types of irradiators; however, initial investment costs can vary by $1 million between the two. Irradiation treatment costs range from 0.5 to 7 cents per pound, with the costs per pound declining as the volume of food treated increases. Cobalt-60 is less expensive than electron beams for annual volumes below 50 million pounds. Electron beams are more economical for radiation source requirements above the equivalent of 1 million curies of cobalt-60.

Irradiation costs are estimated for fish fillets, papayas, cut-up chicken, and strawberries to determine advantages and disadvantages of alternative radiation sources. The largest difference in cost occurs with the papaya irradiators in which using cobalt-60 is cheaper than using x rays from electron accelerators.

Hours of annual operation is an important determinant of irradiation costs. Irradiators that treat seasonal commodities are likely to be idle part of the year. Underutilization raises unit costs because there is less output over which to spread the irradiator's high fixed costs. Proponents of electron accelerators often suggest that an electron accelerator would be more economical for seasonal use. In the example in this study, the electron accelerator has little cost advantage over cobalt-60 for seasonal use because the two types of irradiators have similar levels of fixed costs.

An Economic Analysis of Electron Accelerators and Cobalt-60 for Irradiating Food

By Rosanna Mentzer Morrison

Introduction

Growers, food companies, and regulators continually search for cheaper and/or more effective ways to reduce food losses and improve the quality and safety of foods. At the same time, many consumers and regulators are dissatisfied with some of the chemical preservatives and fumigants used in food. Irradiation may be a technically viable substitute for some of these post-harvest and slaughter treatments. This report provides information on irradiation's economic viability as a food process.

Food irradiation is not a new technology. British and American patents were awarded in 1905 to individuals who suggested that ionizing radiation could be used to preserve food (*17*).[1] Research by the U.S. Atomic Energy Commission (now the Department of Energy) and the U.S. Army dates from the "Atoms for Peace" program of the early 1950's. The U.S. Food and Drug Administration (FDA) approved low-dose irradiation of wheat and wheat flour and white potatoes in the early 1960's. In 1984 and 1985, FDA approved irradiation of spices and pork. The following year, FDA approved low-dose irradiation to control insects in foods and extend the shelf life of fresh fruits and vegetables. With the exception of one-time test marketings of irradiated mangoes and papayas, spices used in processed foods are the only U.S. foods that have been irradiated for commercial sale.

About 20 countries commercially irradiate food, most of them using irradiation to decontaminate small amounts of spices (*28*). The amount of spices treated in individual irradiators ranges from 50 to 20,000 tons per year (*28*). A few countries also irradiate potatoes, onions, poultry, or grain.

Radioactive cobalt-60 is the most common radiation source used for treating foods. Growing awareness of food irradiation has sparked concern over the desirability of a process dependent on a long-life radioactive material. Concerns over environmental and worker safety have heightened interest in whether machine-produced radiation in the form of high-energy electrons or x rays could replace cobalt-60.

This study examines the economies of size for irradiators using machine-produced radiation. Economies of size refer to declining average costs per unit of output or unit costs as the size of the plant increases. Economies of size have implications for the size of food firms most likely to build their own irradiators. If the economies of size are substantial and a large output is needed to capture the production economies, then large food firms will be more likely to invest in this technology. An industry composed of small growers or manufacturers too far apart to consolidate their outputs would be discouraged from using irradiation.

This study also contrasts the economies of size for machine-produced radiation with updated results of an earlier cost study on cobalt-60 irradiators (*21, 22*). Differing economies of size between cobalt-60 and machine irradiators influence which radiation source a company might investigate.

Information on the costs of building and operating food irradiators is limited. Most irradiators treating foods today operate on a research scale or are contract irradiators that treat a variety of foods and nonfoods. In this analysis, capital and operating costs are estimated for hypothetical irradiators treating a particular food. The estimated costs are based on information from builders and operators of commercial irradiation facilities and manufacturers of machine irradiators used to improve plastic and rubber products and sterilize medical devices. The costs presented here are meant to provide the reader with an idea of the magnitude of irradiation treatment costs and how these generalized costs might vary with plant size. Costs for a particular facility will vary depending on the circumstances.

What is Food Irradiation?

Irradiation is a process by which products are exposed to ionizing radiation to achieve a variety of effects. In foods, radiation sterilizes or kills insects or microbial pests by damaging their genetic material. Irradiation also slows ripening and sprouting in fresh fruits and vegetables by inter-

[1] Numbers in parentheses refer to literature cited in the References section.

fering with cell division. Food applications include inhibiting sprouting of potatoes, onions, and other root crops; disinfesting grain and produce; killing foodborne pathogens; and sterilizing a food so it will keep in unrefrigerated storage (table 1). The effects of the radiation depend on the dose absorbed, measured in kilograys (kGy).[2]

Although irradiated foods are exposed to radiation, they do not become radioactive when irradiated with FDA-approved sources. The major problem with irradiating food is that often the dose needed to kill the insect or microbial pest damages the food. Medium doses may soften and pit fruits and vegetables and create off-flavors in radiation-sensitive meats. Irradiation leaves no protective residues, so proper packaging and refrigeration are needed.

In the early 1960's, FDA approved irradiation of white potatoes to stop sprouting and irradiation of wheat and wheat flour to control insects (table 1). Neither application has ever been used by U.S. growers or food manufacturers because of the availability of less expensive and easier to use chemicals. Twenty years later, FDA approved doses of 10 kGy to kill micro-organisms in spices and dried vegetable seasonings. In July 1985, FDA approved irradiation of pork at doses between 0.3 and 1 kGy to sterilize trichinae and prevent trichinosis in humans eating infected pork (*32*). The U.S. Department of Agriculture's (USDA) Food Safety and Inspection Service (FSIS) gave its approval to irradiate pork in January 1986 (*30*).[3]

In April 1986, FDA issued its first blanket approval of doses up to 1 kGy to control insects in foods and delay ripening and sprouting in fresh fruits and vegetables (*33*). FDA also raised the level permissible for spices and dried vegetable seasonings to 30 kGy. The only foods treated for commercial use in the United States are small amounts of spices. Less than 5 percent of spices in the United States are irradiated, and they are used in processed foods. Irradiated spices used as ingredients are not required to be disclosed on the retail label.

FDA is considering approvals above 1 kGy on a case-by-case basis. FDA is reviewing an FSIS petition to use 1.5 to 3 kGy to reduce pathogens in poultry, such as *Salmonellae*, which cause human intestinal illnesses.

[2] One Gray equals 1 joule of energy absorbed per kilogram of absorber. One thousand Grays equals 1 kGy. The older term is kilorad (krad). One kGy equals 100 krads.

[3] FSIS is responsible for the safety and wholesomeness of U.S. red meats and poultry. FSIS cannot authorize the use of irradiation until FDA has approved its use for meats and poultry. However, FSIS can forbid irradiation of the products under its jurisdiction if the agency believes irradiation of these products is not safe.

Table 1—Irradiation's food applications and FDA approvals

Dose (kGy)	Benefits	Limitations	Approvals[1]
0.05-0.15	Inhibits sprouting of root crops and elongation of asparagus.	Potatoes must cure before irradiation.	1964 (potatoes only), 1986
0.15-0.75	Sterilizes insects.	Reinfestation possible. Insects still able to feed.	1963 (wheat and wheat flour only), 1986
0.1-0.75	Delays ripening of some fruits.	Successful for limited number of fruits.	1986
0.3-0.5	Inactivates parasites in meat.	Still need refrigeration.	1985 (trichinae in pork only)
1-2	Kills spoilage micro-organisms in fish and fungi in fruits.	Recontamination possible. Still need refrigeration. Above certain doses, softening, pitting, and other problems.	Petition submitted for fish
2-4	Reduces micro-organisms causing public health problems in meat and poultry.	Recontamination possible. Still need refrigeration. Above certain doses, off-flavor and color problems.	Under review for chicken
23-57	Sterilizes food for packaged, unrefrigerated storage.	Most foods must be irradiated frozen to minimize undesirable changes in quality.	Only spices approved, 1983 and 1986

[1]Two dates are listed for the first two applications because FDA initially approved individual foods. In 1986, FDA granted a broad approval of irradiation doses up to 1 kGy that included the previously approved wheat, wheat flour, and potatoes. For the last application, FDA approved doses of 10 kGy for spices in 1983 and then increased the allowed dose to 30 kGy in 1986.

Why the Interest in Machine Irradiators?

FDA permits three types of ionizing radiation to be used on foods: gamma rays from the radioactive isotopes (radionuclides) cobalt-60 or cesium-137, high-energy electrons, and x rays. The latter two types of radiation are produced by electron accelerator machines powered by electricity. FDA has established maximum energy levels for the machines to prevent inducing radioactivity in the treated food (see discussion in next section). The energy levels of the gamma rays from cobalt-60 and cesium-137 are too low to induce radioactivity.

On the molecular level, these three types of radiation have similar effects. However, they have different properties that affect their technical, social, and economic desirability (table 2). One of the most important technical differences relates to penetration. Gamma rays from cobalt-60 and cesium-137 and x rays can readily penetrate pallet loads of foods. Electrons of the energy levels allowed by FDA cannot penetrate more than 1 to 3 inches, depending on the food's density, when irradiated from one side. The limited penetration of electron beams restricts their use to treating the surface of foods and treating products in individual, thin packages or a shallow stream of grains, powders, or liquids. An irradiator using electron beams must be part of a processing or packing plant to treat the food before it is packed for shipping.

Cobalt-60 is produced by placing nonradioactive cobalt-59 in a nuclear reactor for 1 to 1.5 years. In the reactor, some cobalt-59 atoms absorb neutrons that transform them into radioactive cobalt-60. NORDION International Inc. (previously known as the Radiochemical Company, Atomic Energy of Canada Limited), a Canadian crown corporation, supplies almost 90 percent of the world's supply of cobalt-60. U.S. companies may be reluctant to depend on a foreign supplier for their radiation source.

Cesium-137 is a fission byproduct of nuclear power production. It is extracted by running a nuclear reactor's spent fuel through a multimillion-dollar fuel reprocessing facility. The Department of Energy (DOE) has extracted some cesium-137 from defense reactor waste, but this supply has already been leased or committed to specific projects. Getting more cesium-137 would require reprocessing other defense reactor wastes or spent fuel from commercial nuclear power plants. Reprocessing spent fuel from commercial plants is currently prohibited in the United States.

As with any radioisotope, cobalt-60 and cesium-137 are continually decaying and giving off radiation. Extreme care and

Table 2—Comparison of radiation sources for commercial irradiation

Radiation sources	Advantages	Disadvantages
Isotopes	Reliable, no repair to radiation source needed. Excellent penetration allowing product flexibility.	Radiation continually emitted requiring constant shielding. Radiation emitted in all directions. High perceived safety risk by the public. Source must be replenished periodically and disposed of properly when too weak for commercial use.
Cobalt-60	Widely used. Many years of experience. Foreign supply will continue to grow.	Very minor U.S. supply. 12.5 percent decays each year and must be replenished to maintain original throughput.
Cesium-137	Can be produced domestically from Government nuclear reactors' waste.	Supply is severely limited due to lack of U.S. commercial reprocessing. Water soluble as currently extracted.
Machine-generated	Radiation emission stops when machine is turned off. Radiation can be directed. Environmentally more attractive. Conveyor less complex.	Some development still required.
High-energy electrons	Capable of high throughputs.	Package size and density are restricted. Individual, thin packages must be treated before they are packed for shipping.
X rays	Penetration equivalent to cobalt-60 allowing product flexibility.	Conversion to x rays is inefficient. Not used commercially for material processing; further development required.

Source: Based on *(5)* and modified by author.

special equipment must be used when handling, transporting, and disposing of these materials to ensure that people and other living things are not exposed to the harmful radiation, or that the environment is not contaminated. The cesium-137 extracted and encapsulated by DOE has the additional danger of being water soluble. A leaking or ruptured capsule could contaminate water around it.

Electron accelerators are powered by electricity. Radiation is produced while the machine is on, requiring adequate shielding and proper procedures to protect workers in the facility and the environment. The machine can be turned off for maintenance and when not in use. Electron accelerators are also environmentally attractive because no radioactive materials must travel on highways or be disposed of when too weak for commercial use.

The safety to the environment and the influence of public interest groups are important factors which cannot be ignored in determining the economic viability of food irradiation. Initial plans by DOE to fund six cesium-137 research and demonstration irradiators were opposed strongly by residents in several cities proposed as sites. An irradiator slated for Dublin, CA, was canceled, and the Gainesville, FL, irradiator has been switched from cesium-137 to an electron accelerator. The DOE-funded irradiator proposed to be part of the University of Iowa's Meat Research Lab in Ames has also been switched to an electron accelerator.

In addition to its greater environmental attractiveness, there is interest in using machine-produced radiation to treat foods for economic reasons. The constantly decaying cobalt-60 is most efficiently used when the irradiator is run continually (three shifts a day, 7 days a week). Many fruits, vegetables, and grains have seasonal harvesting patterns, which create periods when the decaying cobalt-60 is not fully utilized. Since machine irradiators can be turned off, they are hypothesized to be more economical in situations of seasonal or other noncontinuous use. There remains a sizable fixed investment in the electron accelerator and the rest of the facility, however, that must be considered. This report will compare the diseconomies of seasonal use for machine and cobalt-60 irradiators, using strawberries as an example.

Cobalt-60 is an important cost item for large irradiators. The amount of cobalt-60 needed is directly related to the dose required and the amount of product that must be treated during a set amount of time. Given this fixed technological relationship, there are no production economies for the radiation source as the size of the irradiator (hourly throughput) increases.[4] In the earlier analysis of cobalt-60 irradiators, it was found that as irradiator size increases and cobalt-60 becomes a larger portion of total costs, fewer size economies are possible, and unit costs decline at a slower rate.

Similarly, the power requirements for an electron accelerator are directly related to dose and hourly throughput. However, as the processing capacity of the accelerator rises, its cost increases less than the power increases. Thus, it has been hypothesized that machine irradiation will exhibit more dramatic economies of size than cobalt-60.

[4] There may be some minor pecuniary economies from the cobalt-60 supplier offering volume price discounts.

Types of Machines and Their Uses

Electron accelerators are generally described by how deeply they can penetrate a material and how much material at what dose they can treat during a set amount of time. Penetrating ability is determined by the energy level of the electrons or voltage of the accelerator and expressed in million electron volts (MeV). The useful electron energy range for material processing is 0.1 to 10 MeV (*7*). At energy levels below 0.1 MeV, the electrons will not penetrate solid materials. Electrons cannot be used on food products at energies much above 12 MeV because of the possibility of inducing radioactivity in the food (*12*).[5] FDA prohibits the use of electron accelerators on foods at energies above 10 MeV.

[5] In comparison, the energy levels of gamma rays from cobalt-60 are 1.17 and 1.33 MeV, considerably below the threshold of inducing radioactivity. Cesium-137 emits a gamma ray of 0.66 MeV (*15*). One MeV equals 1.6×10^{-13} joules (*15*).

Table 3—Penetration by electron beams through water[1]

Energy	Treatment on one side, useful depth[2]	Treatment on both sides, useful depth[2]
MeV	*Inches*	
1	0.11	0.28
2	.22	.57
3	.35	.83
4	.48	1.17
5	.61	1.51
6	.76	1.84
7	.88	2.17
8	1.01	2.54
9	1.14	2.84
10	1.26	3.17

[1]To obtain the penetration depth in different food products, multiply the numbers in the table by the ratio of the density of water (1 gm/cm^3) to the density of the food item *(3)*. Densities range from about 0.4 gm/cm^3 for bulk packaged foods to about 0.9 gm/cm^3 for fish fillets or chicken parts *(5, 13)*.

[2]The dose at the backside of the sample is the same as at the front side.

Source: *(10)*.

Electron beams at a level of 10 MeV can penetrate only about 3 inches into a food when the density of the food is close to 1 gram per cm^3 and if both sides are treated (table 3). Treatment from both sides more than doubles the useful depth of penetration possible with treatment from one side because of the overlap of the beams' depth-dose distributions. The limited penetration of electron beams restricts their use to surface treatment of foods or treating products in individual, thin packages or a shallow stream of small particles, such as grains and powders.

The beam power, expressed in kilowatts (kW), determines the amount of product that can be treated in a specific time interval and at what dose. As the dose or throughput is increased, more beam power is needed.

In most industrial electron accelerators, the energy of the electrons is increased by accelerating them with either a steady electric field or a field varying at a frequency in the microwave range. The former type of accelerator is called a DC (direct current) accelerator. The latter type of accelerator is called an RF (radiofrequency) linear accelerator.[6] A third type of accelerator, the linear induction accelerator, accelerates the electrons using a series of magnetic switches. This type of machine is discussed in the section on x ray conversion.

Today's industrial electron accelerators have been developed with low- to medium-energy levels, less than 5 MeV, and relatively high beam powers, 150 to 500 kW, or with higher energy levels, 7 to 10 MeV, and relatively low beam powers, 10 to 20 kW. Economic and other practical considerations have limited the voltage rating for large DC industrial accelerators to no more than 5 MeV (5). Thus, DC accelerators cannot penetrate more than half an inch of a dense food when irradiated from one side. Irradiation applications requiring greater penetration, electrons with energies above 5 MeV, would use RF linear accelerators. Figure 1 shows the energy level/beam power combinations for existing commercial machines. It is difficult to simultaneously produce high-energy particles and high beam power (5).

[6] RF linear accelerators are also referred to as RF linacs and microwave linacs.

Figure 1

Energy level/beam power combinations for existing commercial electron accelerators

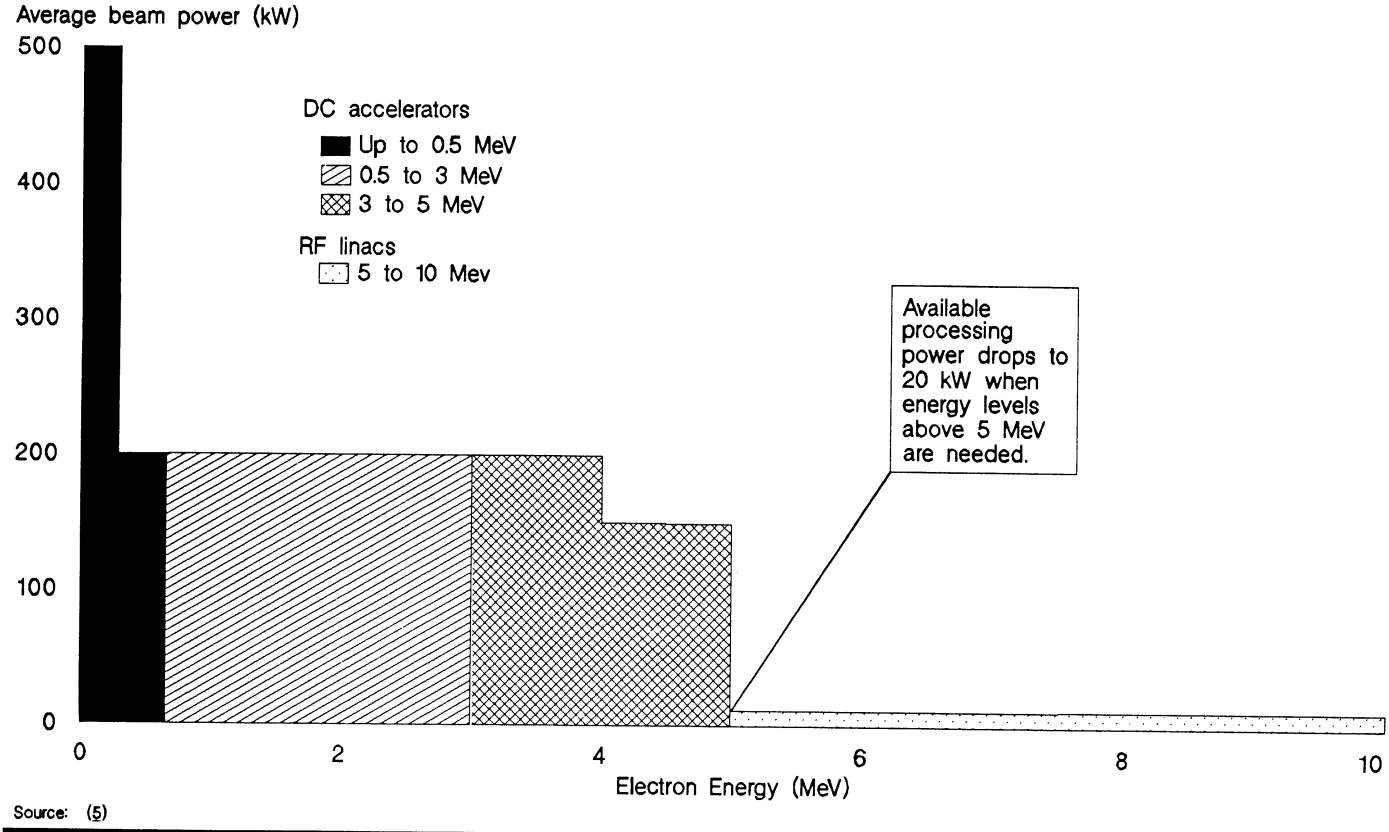

Source: (5)

Figure 2

Russian accelerator irradiation facility for disinfesting grain.

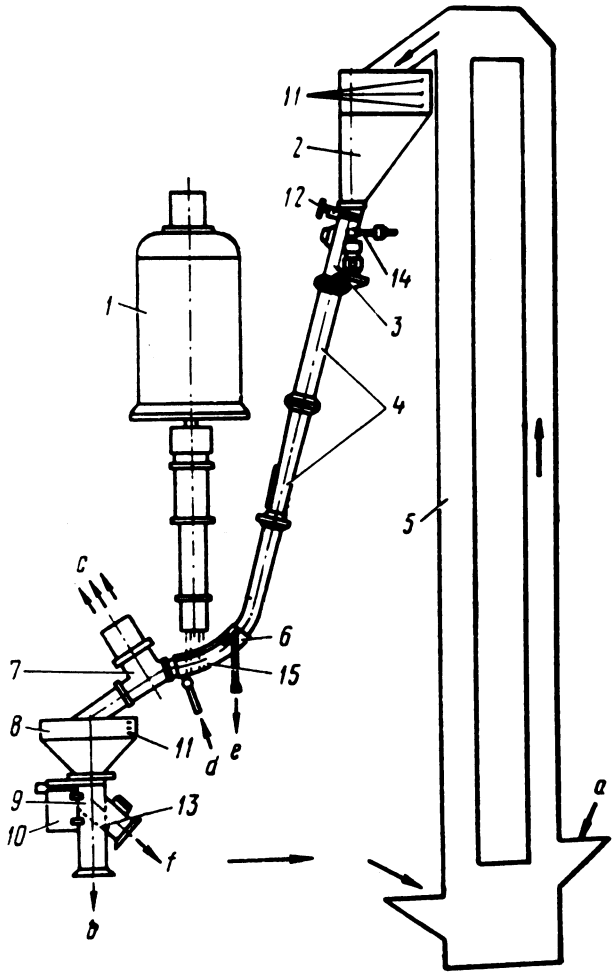

a. infested grain delivered for processing; *b.* processed grain; *c.* suction ducts; *d.* inlet for cooling water; *e.* outlet for cooling water; *f.* grain fed for recycling.

1. electron accelerator;
2. feeding bin;
3. grain flow distribution unit;
4. grain acceleration duct;
5. bucket elevator;
6. irradiation chamber cooling radiator;
7. suction chamber;
8. damping bin;
9. grain flow redistribution chamber;
10. automatic device for maintaining grain level in damping bin;
11. grain level sensors;
12. grain flow control valve;
13. selector valve;
14. fast-action valve;
15. irradiation chamber

From *Techsnabexport.* Moscow. 1984.

DC Accelerators

Machines with energy levels of 0.15 to 0.3 MeV and beam powers up to 500 kW are used for high-speed curing of coatings, inks, and adhesives on paper and film and cross-linking of thin plastic films and wire insulation. The low-energy machines are considered self-shielded since they are encased in lead and can be inserted directly into a processing line (*24*). Their very limited penetration, about 0.02 inch in water, restricts their use for foods to thin streams of liquid or powders.

DC accelerators in the range of 0.3 to 4.5 MeV with maximum beam powers of 200 kW to 150 kW, respectively, are used to improve the physical properties of plastics, cables, and wires. These higher energy DC accelerators, and the RF linear accelerators, generally need thick concrete shielding and a concrete labyrinth arrangement leading into and out of the irradiation area to deflect and absorb the radiation.[7] Disinfestation of loose grain is the food use most often considered appropriate for these DC accelerators.

In 1980, the USSR installed two 1.4-MeV, 20-kW machines at the port of Odessa (*34*). The irradiators are used to rid imported wheat of grain pests (see fig. 2). Infested grain from cargo holds passes through the irradiation zone in a stream 7 to 9 mm (0.3 inch) thick at approximately 18 feet per second. The grain receives a dose of 0.2 to 0.4 kGy. Each accelerator is designed to handle a maximum of 200 tons of grain per hour.

An American-built machine is part of an Israeli experiment to reduce the *Salmonellae* and other bacteria in poultry feed in an effort to produce *Salmonellae*-free chickens. The machine has an energy level of 1.5 MeV and a beam power of 75 kW. This power allows throughputs of about 15 tons per hour of poultry feed needing a dose of 7.5 kGy, or 30 tons per hour of feed needing a dose of 3.75 kGy (*18*).

RF Linear Accelerators

Machines with energy levels of 5 to 10 MeV are generally lower power, 20-kW-and-less RF linear accelerators. The overall electrical efficiency from power source to emitted beam power of RF linacs is only about 20 to 30 percent (*16*), compared with efficiencies of 60 to 80 percent for the DC accelerators.

Along with greater penetration, these higher energy machines also deliver the dose of radiation more uniformly at different depths. RF linacs are used mainly for sterilizing

[7] While the electrons themselves would not require thick shielding, penetrating x rays are produced when the electrons strike material.

medical devices (*5*). There are approximately 10 RF linacs used for industrial processing with power levels of 10 to 20 kW (*5*). RF linacs are also used in research labs and in hospitals for radiation therapy.

An RF linac is used by a French food processing company to reduce *Salmonellae* in mechanically deboned poultry. The mechanically deboned poultry is made into thin 2.25-inch-thick cakes, packaged, and then deep-frozen. The cakes are loaded onto a conveyor that takes them under the beam where they receive a dose of 3 kGy. The cakes are mechanically flipped over and conveyed back under the beam again. Figures 3 and 4 are pictures of the scanning horn of the accelerator and the conveyor. The machine treats 3.5 tons of poultry an hour during 14 hours of operation (*26*). The machine was built by CGR MeV, a French accelerator manufacturer recently purchased by General Electric. The machine produces a 7-MeV electron beam with a power of 5 kW. CGR MeV has also built a 10-MeV, 20-kW machine.

An 18-kW RF linac was built in the early 1960's by the U.S. company, Varian, for the U.S. Army's food irradiation research laboratory in Natick, MA. The accelerator was originally rated at 24 MeV, but its beam energy was later modified to 12 MeV (*25*). The machine was used for food irradiation experiments for many years. RF linear accelerators with power levels between 20 and 50 kW have been designed by various companies, but not built or operated.

Conversion to X rays

The 3-inch-or-less penetration limitation of high-energy electron beams can be overcome by converting them into x rays or bremsstrahlung radiation. X rays are produced when high-energy electrons strike a metal target, such as tungsten. At 3 MeV or above, the penetration of x rays is equivalent to that of cobalt-60 gamma rays (*10*). With x rays, foods can be irradiated in shipping boxes and the radiation can reach the inside of foods and packages.

Figure 3

Frozen mechanically deboned poultry cakes pass under the scanning horn of the electron accelerator. The cakes receive a dose of 3 kGy to reduce *Salmonellae*.

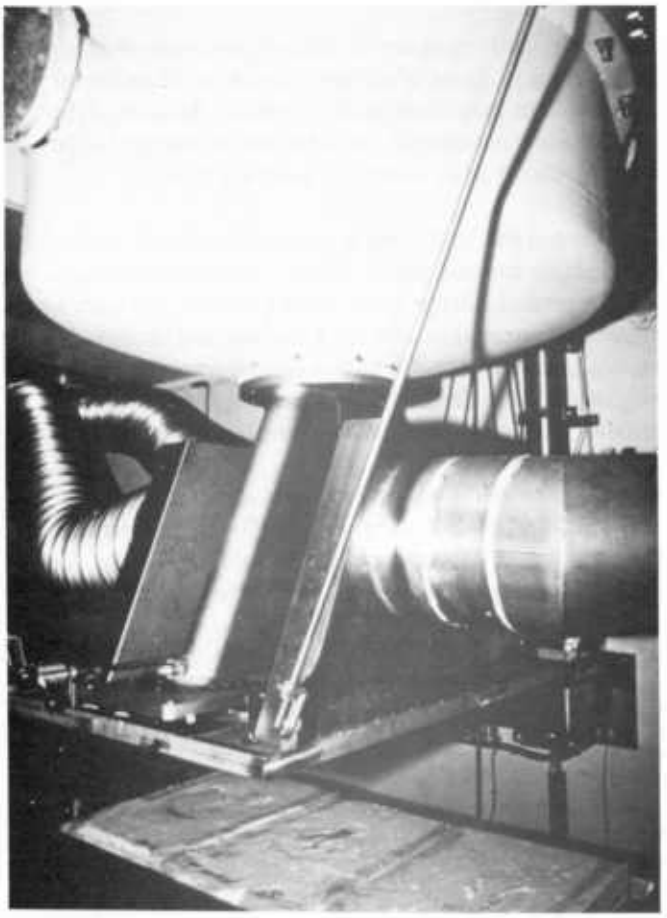

Courtesy of CGR MeV, Buc, France.

Figure 4

The poultry cakes are mechanically flipped over and conveyed under the beam again.

Courtesy of SPI, Brittany, France.

Much of the power, however, is lost as heat when the electrons are converted to x rays. The efficiency of converting electrons to x rays depends on the nature and thickness of the target material and the energy of the electrons. With tungsten as a target material and 5-MeV electrons, only 7 to 8 percent of the original electron beam power is theoretically available for treating objects under the best conditions. The conversion efficiency is higher for 10-MeV electrons (see table 4), but FDA allows electrons of only 5 MeV or less to be converted into x rays for use on foods. To have 20 kW of beam power available to decontaminate 25,400 pounds of chicken per hour, the beam power of the electrons prior to conversion to x rays would need to be at least 260 kW. Machines of this power are not yet commercially available at the 5-MeV energy level. Radiation Dynamics, Inc. builds a 4.5-MeV, 150-kW machine and recently developed a 5-MeV, 200-kW version (*6*).

Accelerators capable of producing high-energy (5- to 10-MeV) electrons with beam powers as high as 500 kW are being developed for military and industrial purposes. These machines would require elaborate cooling systems to remove the heat from such high-powered sources. Two types of high-powered machines are the pseudocontinuous wave accelerator with power levels in the 20- to 250-kW range being developed by Atomic Energy of Canada, Limited, and the pulsed induction linear accelerator being developed by the U.S. Department of Energy at the Lawrence Livermore National Laboratory (*1*). These new accelerator advancements are discussed in (*5*).

Material processing with x rays is not used for commercial purposes. No industrial electron accelerators currently operate in the x ray mode for a significant portion of time (*5*).

Selected Applications and Throughputs

Four applications, including doses, energy levels of the machines, and treatment arrangements, are chosen by the author to illustrate diverse radiation uses on both plant and animal foods. According to the scientific literature, the doses needed will not cause noticeable off-flavors or other undesirable changes. The applications and doses analyzed are:

- Sterilizing fruit flies on Hawaiian papayas to satisfy quarantine requirements for shipment to the continental United States (0.26 kGy).
- Killing spoilage micro-organisms in fish fillets and extending the refrigerated shelf life of fresh fillets by 7 to 10 days (1.75 kGy).[8]
- Decreasing storage decay of strawberries and extending shelf life by several days (2 kGy).
- Reducing the numbers of common food-poisoning micro-organisms, such as *Salmonellae* and *Campylobacter*, in fresh chicken (2.5 kGy)

The only application approved by FDA is irradiation of papaya.[9] The other doses are above FDA's 1 kGy maximum for foods other than spices. FDA does not consider shelf life extension of fish to be a legal application under their 1-kGy approval (*29*). FDA is reviewing a petition from FSIS to use 1.5 to 3 kGy on poultry.

The papaya and strawberry irradiators are assumed to be freestanding facilities which use x rays to irradiate boxed products from individual packing houses. Because of the large power requirements, strawberries are assumed to be treated with 4.5-MeV instead of 5-MeV x rays.[10]

Chicken and fish irradiators are assumed to be physically integrated into existing plants. This arrangement eliminates the refrigerated storage space, certain offices, and truck loading/unloading areas needed for a freestanding facility. An integrated arrangement also allows certain personnel already employed by the slaughtering or packing plant to handle some of the duties associated with the irradiator.

Fish fillets in individual packages are assumed to be irradiated with 10-MeV electrons. At 10 MeV, the radiation penetrates about 1.3 inches from one side. Therefore, fillets of this thickness or less will not need to be flipped over for

Table 4—Theoretical conversion efficiency for x rays with tungsten as the target material

Energy of electron beam	Conversion efficiency in forward direction
MeV	*Percent*
3	4.5
5	7.4
10	14.8

Source: *(6)*.

[8] Proper refrigeration is important so that *Clostridium botulinum* does not grow and produce toxins during the longer shelf life. Some scientists have recommended a lower dose for fish of 1 kGy which would leave enough spoilage micro-organisms on the fish that it would spoil before any botulism risk occurred.

[9] USDA's Animal and Plant Health Inspection Service (APHIS), the agency responsible for determining appropriate quarantine treatments, approved irradiation as a quarantine treatment for Hawaiian papaya in January 1989.

[10] Existing linear accelerators above 5 MeV have maximum beam powers of 20 kW.

both sides to be treated. One-sided, complete penetration can also be used if the goal of the radiation treatment is to inactivate or kill parasites inside the fish.

Packaged chicken parts are assumed to be treated with an electron beam of 7 MeV. This energy level allows surface treatment of the chicken by penetrating about 0.75 inch.[11] The packaged chicken is assumed to be flipped over and to travel under the beam again. Another way to irradiate both sides is to have two offset beams that irradiate the chicken from top and bottom.

Throughputs or hourly capacities are based on actual production conditions in appropriate geographic locations in the United States, such as a major fishing port or the California region with the greatest concentration of strawberry production. These maximum throughputs are then successively halved to approximate annual volumes of existing agricultural plants. Yearly throughputs for the chicken irradiators reflect processing capacities of large- and medium-sized U.S. chicken packing plants.

Technical and Economic Assumptions

The actual cost of irradiating a food will depend on the required dose, the food's tolerance of radiation, construction costs, land prices, wages, financing arrangements, and other variables particular to each situation. The purpose of this study is to provide an idea of the magnitude of irradiation treatment costs and how these generalized costs change with irradiator size. Specific assumptions about input prices and operating procedures are required to make comparisons across plant sizes. The assumptions used in this analysis are based on information from builders and operators of industrial irradiators used mostly to sterilize disposable medical supplies. The following sections describe the major cost components for an electron accelerator facility and some of the assumptions made for this analysis and the earlier cobalt-60 study (*21, 22*).

Capital Costs

Irradiation is a capital-intensive technology requiring a substantial initial investment. The major capital costs are for a radiation source, special shielded structures, and conveyor machinery. Figure 5 shows the major components of an electron accelerator facility.

Electron Accelerator and Installation

The type of accelerator required depends on the amount of penetration and beam power needed. The fish, papaya, and chicken irradiators are assumed to use an RF linear accelerator, and the strawberry irradiator uses a DC accelerator. Beam power is determined by the dose and how much food must be treated per unit of time. Accurate costs for accelerators are difficult to obtain because machines are designed or adapted to the specific requirements of the product and the processing situation.[12] Although similar machines are used for industrial purposes, such as curing tires and sterilizing disposable medical supplies, existing food applications are few. The cost of an accelerator generally increases with beam power and energy level. A study prepared for DOE estimated relationships between capital cost and electron beam power for accelerators with different energy levels (*5*). In this analysis, the purchase price of electron accelerators ranges from $1-$3 million. Installation of the accelerators includes mechanical and electrical installation and verifying the dose absorbed. This charge is assumed to be the same for all accelerators.

The price of cobalt-60, including delivery and loading charges, is assumed to be $1.20 per curie for amounts above 200,000 curies and $1.25 per curie for smaller shipments. Appendix tables 6 through 9 list the costs of the initial cobalt-60 loadings.

Shielding and Auxiliary Systems

Shielding is needed to protect workers operating the facility and the general public from exposure to radiation when the machine is on. The type of accelerators assumed for this study require the thick concrete walls and labyrinth arrangement used in gamma facilities. However, no deep pool of water is needed to store the machine for repairs as is found in cobalt-60 facilities. As with gamma irradiators, an air-handling system is needed to vent out the ozone produced.

In cobalt-60 facilities, the cost of shielding increases with hourly throughput because the irradiation chamber gets larger. Shielding requirements for accelerators increase only slightly for larger hourly throughputs. Larger throughputs are treated by increasing the beam power and conveyor speed.

[11] There is some controversy about whether the *Salmonellae* are also found inside the meat rather than just on the skin. If the inside of the muscle must be treated, it is most likely that x rays would be needed. Such an arrangement would require a lot of power because of the large volumes that must be treated and the inefficient conversion from electrons to x rays. If the chicken parts could be packaged in thickness no greater than 3 inches, then two-sided irradiation with 10-MeV electrons could substitute for x rays.

[12] The general nature of this analysis does not allow the author to provide manufacturers with the engineering specifics required for a more accurate cost estimate. This caveat also holds for other estimated costs such as conveyor system, shielding, and maintenance.

Shielding costs are assumed to be higher for the papaya and strawberry accelerator irradiators than for the fish and chicken accelerator irradiators. The irradiation chambers for papayas and strawberries are larger because the fruits are irradiated in shipping boxes rather than individual, small packages. Also, x rays need thicker shielding than electron beams.

Conveyor System

A conveyor system moves the product past the accelerator. The conveyor must be able to turn the corners of the labyrinth and withstand the effects of radiation. The conveyors for the cobalt-60 irradiators are assumed to increase in cost as more product is treated per hour.

With accelerator irradiators, greater throughputs are handled by increasing the speed of the conveyor. Conveyor speeds in this study range from about 10 to 100 feet per minute. Conveyor manufacturers agree that this speed range can be covered with the same conveyor run at varying speeds. Conveyor systems for the chicken, papaya, and strawberry irradiators are assumed to be more expensive than for the fish irradiators because the chicken is flipped and the papaya and strawberries are treated in larger shipping boxes. Conveyor costs for the integrated accelerator and cobalt-60 irradiators

Figure 5

An electron beam treatment facility

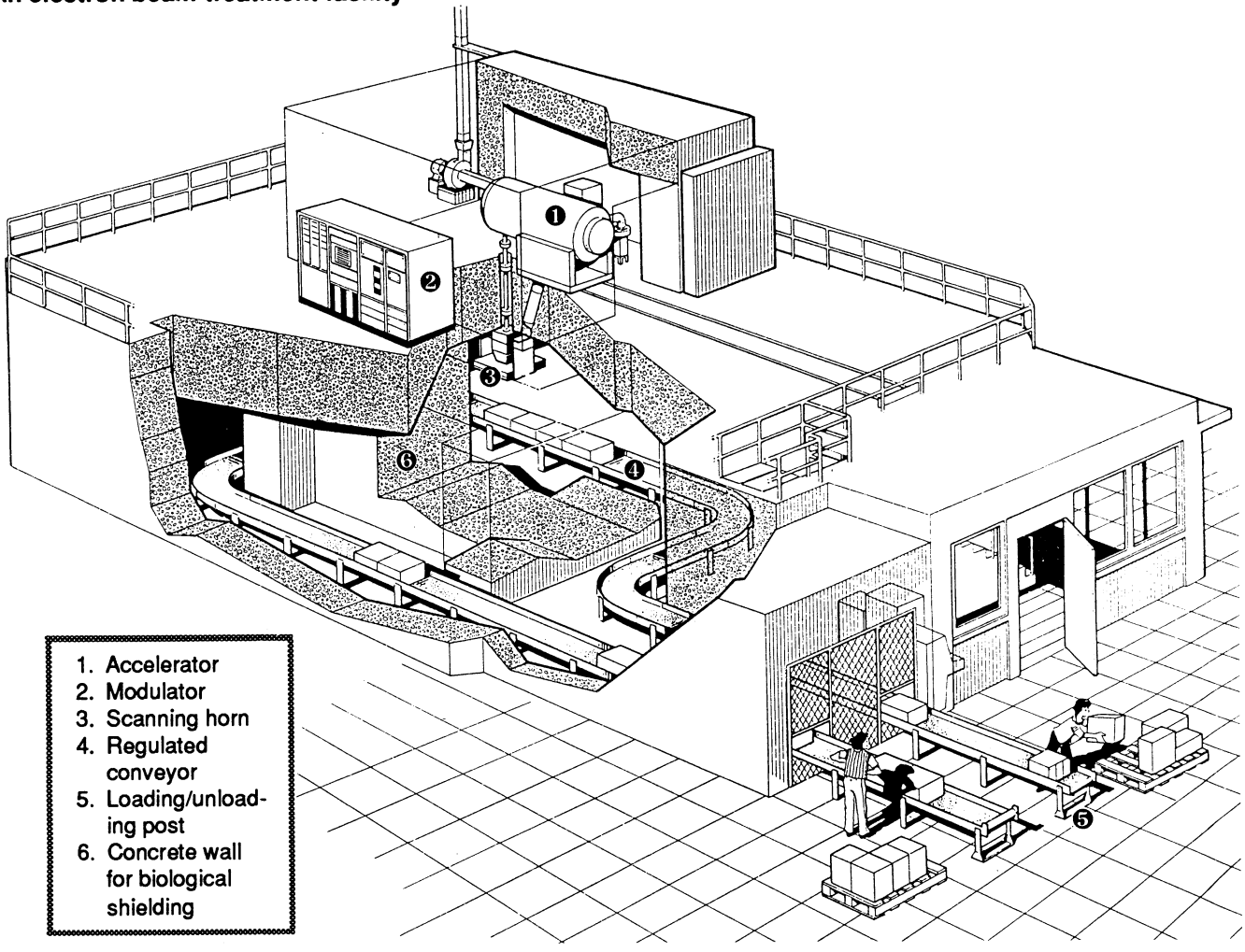

Courtesy of CGR MeV, Buc, France.

are increased to reflect the extra conveyors needed to connect with packing lines.

Other Capital Costs

Building space is required for offices, the control panel area for the accelerator and conveyor, a laboratory to conduct tests to verify the dose received, and room for the accelerator and ancillary equipment. For the freestanding papaya and strawberry facilities, equipment and building space is needed to load and unload trucks. Refrigerated storage space is needed to hold the papayas and strawberries before and after irradiation unless trucking schedules can be coordinated with the irradiation timetable. Refrigerated storage space for a 4-day supply of food for each irradiator's processing capacity is assumed in case of unscheduled downtime or shipping problems.

Land is needed on which to construct the irradiator. For the integrated fish and chicken irradiators, land cost is assumed to be zero since the irradiators would be located adjacent to the packing houses on land already owned by the firms, for which the firms have no alternative use. All freestanding irradiators are assumed to be located on 3 acres of land to allow for trucks to turn around, for building setback requirements, and for other landscaping reasons.

Freestanding irradiators also need forklifts to load and unload the trucks delivering and retrieving food. Because of relatively high U.S. labor costs, depalletizing and repalletizing machines which reduce human labor are used for the largest irradiators.

The same assumptions about building space, refrigerated storage, land, and product-handling equipment are used in the cobalt-60 analysis. Total capital costs, minus the cost of the accelerator or cobalt-60, for the various sized irradiators range from $880,000 to $2.1 million for the accelerator facilities and from $920,000 to $3.3 million for the cobalt-60 facilities.

Operating Costs

Operating costs include fixed and variable labor, electricity to run the accelerator, maintenance costs, general utilities, and miscellaneous operating costs. Total annual operating costs range from $184,000 to $1.4 million for the integrated fish and chicken irradiators and from $317,000 to $733,000 for the freestanding papaya and strawberry irradiators.

Labor

Labor costs account for between 25 and 43 percent of total annual costs for the various electron accelerator facilities. The salaried personnel of the electron accelerator irradiators are assumed to be the same as their cobalt-60 counterparts. Salaried employees consist of a plant manager, a radiation safety officer/quality control person, a maintenance person, and clerical help. The maintenance person for the accelerator irradiator earns a slightly higher salary because of the more sophisticated electronic skills needed. For the integrated fish and chicken irradiators, only portions of the plant manager's, clerical person's, and maintenance person's salaries are allocated to the irradiator (see appendixes A and B). Fifty percent of the maintenance person's salary is allocated to the irradiator instead of the 30 percent assumed in the cobalt-60 analysis, because of the possibility of more complex repairs.

Variable labor, those people needed for each shift, consists of a shift supervisor/plant operator and product handlers. The number of people needed and their salaries are listed in appendixes A and B and appendix table 1.

Utility Costs for the Accelerator

Electron accelerators are powered by electricity. Therefore, electricity is one cost of operating the accelerator. The amount of electricity needed depends on the beam power and the system efficiency of the accelerator. System efficiency is how much of the electrical power from the wall plug comes out as beam power. Beam power needs are determined by the dose, throughput rate, and how much of the beam power is actually absorbed by the product, or the net utilization efficiency. Appendix A lists the formula for computing beam power needs.

Net utilization efficiency is the percentage of radiation emitted by the source that is absorbed by the product rather than being absorbed by the conveyor or traveling in between the packages. Net utilization efficiency for electron accelerators is higher than for cobalt-60 because the electrons and x rays can be focused directly on the product rather than being given off in all directions as with cobalt-60's gamma rays. Net utilization efficiency for the accelerators is assumed to be 40 percent. The cobalt-60 analysis assumes a 25-percent efficiency.

System efficiencies vary between machines. DC accelerators have system efficiencies of 60 to 80 percent (*7*). System efficiencies for RF linear accelerators are 20 to 30 percent (*16*).[13] In this analysis, system efficiency is assumed to be 25 percent for the fish, papaya, and chicken accelerators and 60 percent for the strawberry accelerator. Accelerators with lower net utilization or system efficiencies

[13] The system efficiency for the accelerator built by CGR MeV for irradiating mechanically deboned frozen poultry cakes is 10 percent (*26*).

than those assumed in this analysis will have larger utility needs. Higher utility costs will increase the cost of irradiating the foods.

When x rays are used, the efficiency of converting the electron beam into x rays must also be considered. This conversion efficiency is assumed to be 7 percent in a forward direction useful for processing. Forty percent of the x rays are assumed to be absorbed by the food. Thus, in the x ray mode, only 2.8 percent of the original beam power is used to treat the food. The example in the box shows how these efficiencies affect beam power needs and electricity costs.

Power Needs and Costs: A Papaya Example

X rays are used on papayas so the fruit can be treated in shipping boxes and the radiation reaches the inside of the fruit. The largest papaya irradiator in table 8 is designed to irradiate about 19,000 pounds of fruit an hour. Treating 19,000 pounds of food an hour at a dose of 0.26 kGy requires about 0.6 kW of power. Because only 7 percent of the beam power will be converted to useful x rays and only 40 percent of the x rays will be absorbed, about 22 kW of beam power will be needed. The 22 kW must be multiplied by four to account for the 25-percent system efficiency typical of an RF linear accelerator to determine electricity requirements. Thus, the annual electricity cost for the accelerator used in the largest papaya irradiator is 22 kW x 4 x the price of electricity per kWh x the number of hours the irradiator is operated per year. Electricity is assumed to cost 4.7 cents per kilowatthour, which was the average cost of electricity for U.S. industrial customers in 1987. In this example, the electricity cost for the accelerator is about $21,000 per year or about 5 percent of annual variable costs.

Other Operating Costs

Costs for scheduled maintenance and repairs are assumed to be 5 percent of the initial cost of the electron accelerator. Maintenance costs are assumed to be 3.5 percent of the total facility cost for the cobalt-60 irradiators. General utility costs for water, phones, and electricity for the conveyor and refrigerated storage are assumed to be the same for accelerator and cobalt-60 facilities of equal size. Assumptions about other miscellaneous costs, such as working capital, insurance, and taxes, are listed in appendixes A and B.

Processing Schedules

In the cobalt-60 analysis, all but the smallest fish irradiator are assumed to operate three shifts so that the constantly decaying cobalt-60 can be used most efficiently. Electron accelerators can be turned off when not in use, so one must weigh the alternatives of machine costs versus hours of operation. It may be more economical to treat a day's worth of food in one shift by operating a larger machine and save on variable labor costs. This is the case with the relatively small fish irradiators. The larger daily volumes for the chicken, papaya, and strawberry irradiators are handled in three shifts because their beam power requirements are greater.

Fish, chicken, and papaya irradiators are assumed to run 5 days per week, year round. The fish and papaya irradiators are assumed to operate 240 days a year, and the chicken irradiators are assumed to operate 250 days per year. Strawberries are irradiated 7 days per week for 4 months of the year, 124 processing days per year. Treatment of seasonal agricultural products is more likely to follow this schedule. If other commodities requiring the same equipment can be irradiated in the strawberry facilities during the off-season, the capital costs can be spread over a larger output and the average treatment costs will be lower.

Irradiators do not operate continuously. Downtime is needed for maintenance and replenishing the cobalt-60. Downtime for the machine and cobalt-60 irradiators is assumed to be 1 hour for every 7 hours of processing.[14] Table 5 lists how many hours per year the hypothetical irradiators are operated and their corresponding hourly throughputs and radiation source requirements.

Calculating an Annual Charge for Fixed and Variable Costs

The total cost of building and operating an irradiator is divided into fixed and variable costs. Fixed costs remain unchanged as output is altered. For example, once the shielding and machinery are built to accommodate a particular level of throughput, the cost of using these inputs will not change if output is reduced. In contrast, the cost of inputs such as utilities and hourly labor are directly related to the volume of output. Hourly labor, supplies, utilities, and maintenance that depend on how much the facility is used are considered variable-cost items.

[14] One user of a linear accelerator, who runs his machine 24 hours a day, performs a total of 16 hours of preventive and unscheduled maintenance each week (*9*). If downtime for the accelerator irradiators were greater than what is assumed for this analysis, unit costs would be higher because there would be less output over which to spread the fixed costs.

Fixed and variable costs are expressed on an annual basis so that total cost can be divided by annual output to derive unit cost. Recurring expenses like utilities, salaries, and maintenance costs are already expressed on a yearly basis. An annual cost for the investment items, such as the accelerator, buildings and shielding, and machinery, is calculated as in the earlier cobalt-60 study. The procedure computes an average annual charge in current dollar values to recover the original investment or purchase price, plus the opportunity cost of the money spent to buy the assets, over their useful lives. The formula used is described at the end of appendix A. The useful life of the accelerator is assumed to be 15 years, to be comparable to the 15-year useful life of cobalt-60. The useful lives for the other capital assets are assumed to be 25 years for buildings and shielding and 10 years for the conveyor system and other machinery. An assumed real (adjusted for inflation) interest rate of 5 percent is used.

Table 5—Annual hours of operation, hourly throughputs, and radiation source requirements

Commodity and annual throughput	Annual hours of operation	Hourly throughput	Radiation source requirement	
Million pounds	*Hours*	*Pounds per hour*	*kW*	*kcuries*
Fish fillets:[1]				
6	1,680	3,570	2.0	—
12	1,680	7,140	3.9	—
24	1,680	14,280	7.9	—
48	1,680	28,560	15.7	—
Fish fillets:[2]				
6	1,680	3,570	—	239
12	5,040	2,380	—	159
24	5,040	4,760	—	319
48	5,040	9,520	—	638
Papayas:[3]				
12	5,040	2,380	2.8	24
24	5,040	4,760	5.6	47
48	5,040	9,520	11.1	95
96	5,040	19,050	22.3	189
Cut-up chicken[3]				
52	5,250	9,905	7.8	947
104	5,250	19,810	15.6	1,894
208	5,250	39,620	31.2	3,789
416[4]	5,250	79,240	62.4	7,577
Strawberries:[3]				
25	2,604	9,600	100.8	653

— = not applicable
[1]Electron accelerator facilities.
[2]Cobalt-60 facilities.
[3]Electron accelerator and cobalt-60 facilities.
[4]Throughput for the largest chicken accelerator and cobalt-60 irradiator is divided between two irradiators.

This approach does not take into account the potentially important effects that tax code provisions such as depreciation schedules, investment tax credits, and deductibility of interest payments on loans may have on a particular investment decision. Tax considerations vary between firms and between States and would make this analysis less general.

Cost Analysis and Economies of Size

Irradiation is a capital-intensive technology requiring a substantial initial investment. Commercial-scale electron accelerators are complex machines with minimum prices of $500,000 to $700,000. An irradiation facility must have radiation shielding, conveyors, controls, and other equipment. Table 6 lists estimates of the initial investment costs for the four sizes of fish, papaya, and chicken machine irradiators. The minimum investment cost is $2.1 million for the smallest fish irradiator. The largest chicken irradiator has initial investment costs of $8.8 million. The 416 million pounds of chicken per year irradiated by the largest facility is assumed to be divided between two irradiators because of the amount of power required.

Table 6 lists the treatment costs per pound (unit costs) for the fish, papaya, and chicken machine irradiators based on the specific assumptions and input prices used in this analysis. Appendix tables 3, 4, and 5 contain the capital and operating costs underlying the unit costs. The last columns of table 6 list farm and retail prices for the three commodities for comparison with irradiation costs. Treatment costs vary from 6.9 cents per pound for the smallest fish irradiator to 0.5 cent per pound for the largest chicken irradiator. Unit costs rise with higher doses and smaller volumes.

All three applications exhibit decreasing unit costs as the plant capacity is doubled, demonstrating economies of size. In the absence of transportation costs, larger irradiators are able to treat foods at a lower unit cost than smaller irradiators. However, in all cases, the production economies become less pronounced as size increases. Unit costs fall 3 cents between the two smallest fish irradiators, compared with a 0.02-cent decline for the two largest chicken irradiators.

Irradiators using machine-produced radiation can realize significant per unit cost reductions as they increase in size up to annual volumes of 100 million pounds. Above that level, unit costs continue to decline, but at a slower rate, as illustrated by unit costs for the chicken irradiators. Unit costs decline by 37 percent between the 52-million pound irradiator and the 104-million pound one. Between the 104- and 208-million-pound irradiators, unit costs decline by 27

Table 6—Investment and treatment costs for electron accelerator irradiators

Commodity and annual throughput	Dose	Initial investment[1]	Irradiation treatment costs[2]	Farm price[3]	Retail price
Million pounds	*kGy*	*Million dollars*	----------*Cents per pound*----------		
Fish fillets:[4]	1.75				
6		2.1	6.9	180	499-1,099
12		2.3	3.8		
24		2.7	2.2		
48		3.0	1.3		
Papaya:[5]	0.26				
12		2.9	5.8	18	89
24		3.1	3.1		
48		3.6	1.9		
96		4.7	1.2		
Cut-up chicken:[4]	2.5				
52		2.8	1.2	35	129
104		3.1	.7		
208		4.4	.53		
416		8.8	.51		

[1]Initial investment includes the 1988 purchase price for the electron accelerator, shielding and other building space, product-handling equipment, design and engineering, and working capital. For freestanding facilities, the cost of the land and refrigerated warehouse space is also included.
[2]Unit costs are based on assumptions and input prices listed in appendix A.
[3]Source: *Agricultural Statistics 1987*, U.S. Dept. Agr.
[4]Integrated facility.
[5]Freestanding facility.

percent. But unit costs drop by only 0.02 cent, or 4 percent, between the two largest chicken irradiators.

Source of Size Economies

Economies of size result from production inputs expanding less than proportionally with increases in throughput. To determine the source of the economies, one examines how the major cost components change with size. The electron accelerator, buildings and machinery, and labor account for 63 to 78 percent of unit cost in these scenarios (see tables 7-9).

One way to demonstrate the sources of production economies is to calculate the relative costs of largest facility to smallest facility for each cost component. Table 10 lists the cost ratios of largest to smallest facility for the total cost and six cost components for the three foods. The ratios for the annual food throughputs are 8 (for example, 6 million to 48 million pounds for fish), indicating an eightfold increase in throughput. If the irradiators had no economies of size, their total cost ratios would also be 8. However, all three ratios are less than 4. This means that total costs increase less than 300 percent as throughput increases 700 percent. The fish irradiators, with the smallest total cost ratio (1.47), exhibit the most economies of size, followed by papayas (1.66), and then chicken (3.49). This is to be expected because the chicken irradiators are larger and gains from economies of size decline as throughput increases.

The dominant cost components—buildings and machinery, labor, and the accelerator—have relatively low cost ratios, indicating their importance as sources of size economies. For the fish and chicken irradiators, buildings and machinery have the lowest cost ratio of the six components and are the primary source of the size economies. Buildings and machinery are not the primary source of economies of size for the papaya irradiators. Unlike the integrated fish and chicken irradiators, the freestanding papaya irradiators need refrigerated storage space that increases proportionately with throughput. Buildings, shielding, and conveyor costs are likely to follow the general construction relationship where productive capacity increases faster than cost, although economies are likely to decline as size increases (*19*). This relationship also contributes to the existence of larger economies for small irradiators. However, larger plants can make use of labor-saving machinery not justified at lower volumes. Workers in the smallest irradiators restack pallets by hand, whereas the largest irradiators use depalletizing and repalletizing machines for this task.

Certain employees—plant manager, quality control person, maintenance and clerical personnel, and shift supervisors—are needed regardless of the size of the irradiator. Spreading

Table 7—Electron accelerator fish irradiators: Annual costs for major cost categories and initial investment by annual throughput[1]

Cost items	6 million pounds		12 million pounds		24 million pounds		48 million pounds	
	Dollars	*Percent of total*	*Dollars*	*Percent of total*	*Dollars*	*Percent of total*	*Dollars*	*Percent of total*
Accelerator	115,600	28	134,900	30	163,800	31	192,700	31
Buildings and machinery	71,900	17	71,900	16	74,700	14	76,000	12
Labor	112,900	27	112,900	25	132,400	25	151,900	25
Maintenance	51,000	12	60,000	13	75,000	14	91,000	15
Utilities	19,600	5	22,200	5	28,500	5	39,000	6
Other[2]	44,300	11	48,500	11	55,000	10	61,500	10
Total[3]	415,300	100	450,400	100	529,400	100	612,100	100
				Dollars				
Initial investment[4]	2,128,000		2,331,000		2,663,000		2,985,000	
				Cents per pound				
Cost per pound	6.9		3.8		2.2		1.3	

[1]Integrated facility, year-round operation, 5 days per week, one shift per day, 1.75-kGy dose. The estimated costs in this table are based on assumptions listed in appendix A. The costs for the accelerator, buildings, and machinery are the average annual charges in current dollars to recover the original investment (purchase price), plus the opportunity cost of the money spent to buy the assets, over their useful lives (see end of appendix A for the formula).

[2]Annual cost for working capital, insurance, and taxes.

[3]Numbers may not sum to total because of rounding.

[4]Initial investment includes the 1988 purchase price for the electron accelerator, shielding and other building space, product-handling equipment, design and engineering, and working capital.

Table 8—Electron accelerator papaya irradiators: Annual costs for major cost categories and initial investment by annual throughput[1]

Cost items	12 million pounds		24 million pounds		48 million pounds		96 million pounds	
	Dollars	*Percent of total*	*Dollars*	*Percent of total*	*Dollars*	*Percent of total*	*Dollars*	*Percent of total*
Accelerator	134,900	20	154,100	21	183,100	21	231,200	20
Buildings and machinery	105,700	15	111,100	15	123,500	14	169,700	15
Labor	298,000	43	300,000	40	371,000	42	449,000	39
Maintenance	60,000	9	71,000	10	85,000	10	111,000	10
Utilities	25,600	4	33,300	4	47,600	5	82,100	7
Other[2]	65,800	10	72,100	10	82,300	9	105,100	9
Total[3]	690,000	100	741,600	100	892,500	100	1,148,000	100
				Dollars				
Initial investment[4]	2,866,000		3,148,000		3,639,000		4,686,000	
				Cents per pound				
Cost per pound	5.8		3.1		1.9		1.2	

[1]Freestanding facility, year round operation, 5 days per week, three shifts per day, 0.26-kGy dose. Electron beams are converted into x rays. The estimated costs in this table are based on assumptions listed in appendix A. The costs for the accelerator, buildings, and machinery are the average annual charges in current dollars to recover the original investment (purchase price), plus the opportunity cost of the money spent to buy the assets, over their useful lives (see end of appendix A for the formula).

[2]Annual cost for land, working capital, insurance, and taxes.

[3]Numbers may not sum to total because of rounding.

[4]Initial investment includes the 1988 purchase price for the electron accelerator, shielding and other building space, product-handling equipment, refrigerated warehouse space, design and engineering, land, and working capital.

Table 9—Electron accelerator chicken irradiators: Annual costs for major cost categories and initial investment by annual throughput[1]

Cost items	52 million pounds		104 million pounds		208 million pounds		416 million pounds	
	Dollars	*Percent of total*	*Dollars*	*Percent of total*	*Dollars*	*Percent of total*	*Dollars*	*Percent of total*
Accelerator	163,800	27	192,700	26	308,300	28	616,600	29
Building and machinery	85,600	14	89,100	12	93,800	9	187,000	9
Labor	171,000	28	230,000	30	288,000	26	522,000	25
Maintenance	75,000	12	91,000	12	151,000	14	300,000	14
Utilities	51,700	9	86,400	11	158,800	15	298,600	14
Other[2]	57,700	10	65,100	9	92,500	8	184,000	9
Total[3]	604,800	100	754,300	100	1,092,400	100	2,108,200	100
				Dollars				
Initial investment[4]	2,766,000		3,122,000		4,407,000		8,787,000	
				Cents per pound				
Cost per pound	1.2		0.7		0.53		0.51	

[1]Integrated facility, year-round operation, 5 days per week, three shifts per day, 2.5-kGy dose. The estimated costs in this table are based on assumptions listed in appendix A. The costs for the accelerator, buildings, and machinery are the average annual charges in current dollars to recover the original investment (purchase price), plus the opportunity cost of the money spent to buy the assets, over their useful lives (see end of appendix A for the formula).
[2]Annual cost for working capital, insurance, and taxes.
[3]Numbers may not sum to total because of rounding.
[4]Initial investment includes the 1988 purchase price for the electron accelerator, shielding and other building space, product-handling equipment, design and engineering, and working capital.

their fixed salaries over large outputs lowers average fixed labor costs.[15] When salaried employees are a major cost item, such as in the papaya irradiators where costs for the plant manager and maintenance and clerical personnel are not shared with a packing or slaughtering plant, favorable economies are captured with relatively small increases in irradiator size. Conversely, the number of material handlers depends on the volume treated. In large irradiators requiring many product handlers, they become a more important component of labor costs and moderate the economies of size for total labor costs. For example, the ratio of largest to smallest facility for labor costs for the fish irradiators is 1.35 versus 3.05 for the chicken irradiators, meaning that labor costs rise more over the range of the chicken irradiators than over the smaller fish irradiators.

Electron accelerators also have economies of size. The cost of an accelerator increases less than proportionally with its processing capacity or beam power. This relationship is observed in table 10, where the ratios of largest to smallest facilities for the accelerator are 1.67 for the fish irradiators, 1.71 for the papaya irradiators, and 3.76 for the chicken irradiators. The chicken irradiators' ratio is higher, reflecting fewer economies of size, because the largest chicken facility is assumed to need two accelerators.

Utilities have the highest ratio of the six components, 1.99 for the fish irradiators, 3.21 for papaya, and 5.77 for chicken. Thus, utilities are less of a source of size economies. Electricity costs for the accelerators show no size economies

Table 10—Cost increases in moving from smallest to largest irradiator for selected cost items

Cost item	Fish	Papaya	Chicken
		Cost ratios[1]	
Accelerator	1.67	1.71	3.76
Building and machinery	1.06	1.61	2.18
Labor	1.35	1.51	3.05
Maintenance	1.78	1.85	4.00
Utilities	1.99	3.21	5.77
Other	1.39	1.60	3.19
Total cost	1.47	1.66	3.49
Annual throughput	8.00	8.00	8.00

[1]Cost ratios represent the proportionate increases in cost for the selected items associated with an eightfold increase in irradiator throughput. Cost ratios are calculated by dividing the annual cost of a particular item for the largest irradiator by the annual cost of that item for the smallest irradiator.

[15] Salaries were not assumed to change as irradiator size increased because of the relatively small work force (all sizes employed fewer than 40 people) and the fact that the skill levels of the employees do not change much as size increases

because electricity needs are directly related to hourly throughput and dose. However, electricity cost for the accelerators is a small component of total cost, less than $5,000 for the fish irradiators, $21,000 for the papaya irradiators, and $62,000 for the chicken irradiators.

Comparison With Cobalt-60 Irradiators

Tables 11 through 13 list the annual costs for the major cost components, the initial investments, and the unit costs for the same three sets of irradiators where the radiation source is cobalt-60 instead of electron beams or x rays.[16] Appendix tables 6 through 9 contain the capital and operating costs underlying the unit costs for the cobalt-60 irradiators. Machine irradiators, both electron beams and x rays, require a higher initial investment than their cobalt-60 counterparts, except for the three largest chicken irradiators. Initial investment costs for the cobalt-60 fish irradiators range from $1.2-$1.8 million and from $2.1-$3.0 million for the machine fish irradiators. For the papaya irradiators, the difference between the initial investment for cobalt-60 and machine irradiators is even greater. Investment costs for the cobalt-60 irradiators range from $1.3-$2.8 million compared with $2.9-$4.7 million for the machine irradiators.

The three largest chicken irradiators have larger initial investments for the cobalt-60 facilities than for machine irradiators. Investment costs for the cobalt-60 irradiators range from $2.3-$12.6 million compared with $2.8-$8.8 million for the machine irradiators. The large hourly throughputs and relatively high dose requires cobalt-60 loadings of 1.9, 3.8, and 7.6 million curies for the three largest chicken irradiators. At $1.20 per curie, that is a big expense. Other studies have concluded that initial costs for the radiation source are less for electron accelerators than for cobalt-60 when the source requirements fall between 1 and 2 million curies (*4*).[17]

Despite wide differences in initial investment costs, unit costs for the machine and cobalt-60 irradiators are similar. For example, unit costs for the fish and chicken irradiators differ on average by less than 0.4 cent. Using x rays to irradiate papayas is 0.9 cent per pound higher on average than the cost of using cobalt-60.

Both radiation sources display economies of size, although they are more important for the machine irradiators. For the fish irradiator sizes, unit costs decline on average 70 percent for each 100-percent increase in size for the cobalt-60 irradiators and 81 percent for the machine irradiators. For the papaya irradiators, unit costs decline on average 70 percent for each 100-percent increase in size for the cobalt-60 irradiators and 76 percent for the machine irradiators. And for the large chicken irradiators for which economies of size are less dramatic, unit costs fall on average 20 percent for each 100-percent increase in size for the cobalt-60 irradiators and 39 percent for the machine irradiators. The machine irradiators have significantly declining unit costs at annual throughputs between 50 and 100 million pounds, and even between 100 and 200 million pounds. This occurs because the RF linear accelerator has economies of size up to the technical limit of 30 kW of beam power assumed in this analysis. Economies of size become less important for the cobalt-60 irradiators at annual throughputs above 50 million pounds, largely because cobalt-60 costs are directly related to hourly throughput. When the radiation source becomes a larger portion of total costs, such as in large irradiators applying higher doses like the chicken examples, fewer size economies are possible with cobalt-60.

Fish Irradiators

Based on the assumptions in this analysis, it is slightly more expensive, on a per pound basis, to irradiate fish using an electron accelerator than cobalt-60 up to the 48-million-pound integrated facility (tables 7 and 11). Annual costs for the radiation source, maintenance, and other costs, mostly due to insurance and taxes on the facility and accelerator, are higher for the machine irradiators. For the 48-million pound facility, these cost differences narrow and irradiation costs are 1.3 cents per pound for both the machine and cobalt-60.

The machine irradiators are assumed to operate one shift because the small volumes handled means their power needs are also small. With daily volumes processed in 7 hours rather than 21, power needs for the fish irradiators range from about 2 to 16 kW.[18] Unit costs are found to be less by running larger hourly volumes for one shift and saving on variable labor costs. The 6-million pound cobalt-60 irradiator is also run just one shift because unit costs are lower, 5.5 versus 6.6 cents per pound, than if three shifts are run. This is not the case for the next three sizes of cobalt-60 fish irradiators. The cost of a larger supply of cobalt-60 and a bigger conveyor system for their larger hourly capacities under a one-shift operation outweigh the savings in variable labor and other variable costs.

[16] The cobalt-60 costs estimates were revised from the earlier irradiation study (*21, 22*). Costs were updated to reflect 1987 prices. Also, an assumed real interest rate of 5 percent was used to annualize the costs of capital assets instead of the previously used nominal interest rate of 11.75 percent.

[17] 1 million curies of cobalt-60 is roughly equivalent to 10 kW of electron beam power (*8*).

[18] From conversations with manufacturers of these machines, it appears that the minimum power of an accelerator is 1 kW and such a machine costs about $650,000.

Table 11—Cobalt-60 fish irradiators: Annual costs for major cost categories, initial investment, and unit costs by annual throughput[1]

Cost items	6 million pounds		12 million pounds		24 million pounds		48 million pounds	
	Dollars	*Percent of total*	*Dollars*	*Percent of total*	*Dollars*	*Percent of total*	*Dollars*	*Percent of total*
Cobalt-60[2]	60,900	19	41,300	10	81,100	17	162,200	27
Buildings and machinery	80,000	24	80,000	19	86,400	18	89,200	15
Labor	105,900	32	222,500	53	222,500	46	222,500	37
Maintenance	32,000	10	32,000	8	41,000	8	56,000	9
Utilities	22,000	7	21,000	5	26,000	5	34,000	6
Other[3]	25,800	8	25,300	6	30,400	6	38,600	6
Total[4]	326,600	100	422,100	100	487,400	100	602,500	100
				Dollars				
Initial investment[5]	1,244,000		1,185,000		1,437,000		1,846,000	
				Cents per pound				
Cost per pound	5.5		3.5		2.0		1.3	

[1]Integrated facility, year-round operation, 5 days per week, 1.75-kGy dose. The 6-million pound irradiator operates one shift per day, and the other three irradiators operate three shifts per day. The estimated costs in this table are based on assumptions listed in appendix B. The costs for the cobalt-60, buildings, and machinery are the average annual charges in current dollars to recover the original investment (purchase price), plus the opportunity cost of the money spent to buy the assets, over their useful lives (see end of appendix A for the formula).

[2]Includes annual cost of initial cobalt-60 and yearly replenishment.

[3]Annual cost for working capital, insurance, and taxes.

[4]Numbers may not sum to total because of rounding.

[5]Initial investment includes the 1988 purchase price for cobalt-60, shielding and other building space, irradiator machinery and auxiliary systems, product-handling equipment, design and engineering, and working capital.

Table 12—Cobalt-60 papaya irradiators: Annual costs for major cost categories, initial investment, and unit costs by annual throughput[1]

Cost items	12 million pounds		24 million pounds		48 million pounds		96 million pounds	
	Dollars	*Percent of total*	*Dollars*	*Percent of total*	*Dollars*	*Percent of total*	*Dollars*	*Percent of total*
Cobalt-60[2]	6,200	1	12,300	2	24,500	4	49,100	5
Buildings and machinery	94,200	20	106,100	21	131,200	20	205,200	23
Labor	294,000	61	296,000	57	367,000	56	445,000	49
Maintenance	30,000	6	36,000	7	46,000	7	74,000	8
Utilities	23,000	5	28,000	5	37,000	6	61,000	7
Other[3]	35,200	7	38,300	7	46,400	7	65,800	7
Total[4]	482,600	100	516,700	100	652,100	100	900,100	100
				Dollars				
Initial investment[5]	1,329,000		1,504,000		1,876,000		2,784,000	
				Cents per pound				
Cost per pound	4.0		2.2		1.4		0.9	

[1]Freestanding facility, year-round operation, 5 days per week, three shifts per day, 0.26-kGy dose. The estimated costs in this table are based on assumptions listed in appendix B. The costs for the cobalt-60, buildings, and machinery are the average annual charges in current dollars to recover the original investment (purchase price), plus the opportunity cost of the money spent to buy the assets, over their useful lives (see end of appendix A for the formula).

[2]Includes annual cost for initial cobalt-60 and yearly replenishment.

[3]Annual cost for land, working capital, insurance, and taxes.

[4]Numbers may not sum to total because of rounding.

[5]Initial investment includes the 1988 purchase price for cobalt-60, shielding and other building space, irradiator machinery and auxiliary systems, product-handling equipment, refrigerated warehouse space, design and engineering, land, and working capital.

Table 13—Cobalt-60 chicken irradiators: Annual costs for major cost categories, initial investment, and unit costs by throughput[1]

Cost items	52 million pounds		104 million pounds		208 million pounds		416 million pounds	
	Dollars	*Percent of total*	*Dollars*	*Percent of total*	*Dollars*	*Percent of total*	*Dollars*	*Percent of total*
Cobalt-60[2]	241,100	36	471,600	43	943,100	51	1,886,300	52
Buildings and machinery	103,300	15	133,100	12	172,800	9	321,500	9
Labor	164,000	25	222,500	20	281,000	15	507,000	14
Maintenance	67,000	10	112,000	10	200,000	11	381,000	11
Utilities	44,000	7	71,000	7	124,000	7	242,000	7
Other[3]	49,100	7	78,400	7	133,400	7	259,900	7
Total[4]	668,500	100	1,088,600	100	1,854,300	100	3,597,700	100
				Dollars				
Initial investment[5]	2,344,000		3,771,000		6,498,000		12,638,000	
				Cents per pound				
Cost per pound	1.3		1.1		0.89		0.86	

[1]Integrated facility, year-round operation, 5 days per week, three shifts per day, 2.5-kGy dose. The estimated costs in this table are based on assumptions listed in appendix B. The costs for the cobalt-60, buildings, and machinery are the average annual charges in current dollars to recover the original investment (purchase price), plus the opportunity cost of the money spent to buy the assets, over their useful lives (see end of appendix A for the formula).

[2]Includes annual cost for initial cobalt-60 and yearly replenishment.

[3]Annual cost for working capital, insurance, and taxes.

[4]Numbers may not sum to total because of rounding.

[5]Initial investment includes the 1988 purchase price for cobalt-60, shielding and other building space, irradiator machinery and auxiliary systems, product-handling equipment, design and engineering, and working capital.

Papaya Irradiators

Of the food applications examined, papaya irradiators exhibit the largest differences in unit costs between the machine and cobalt-60 irradiators. This is due primarily to the inefficiency of using x rays. For all four sizes, it is cheaper to irradiate the papayas with cobalt-60 than with x rays from an electron accelerator (tables 8 and 12). Labor needs are the same for both types of irradiators. Irradiators run three shifts a day, 240 days a year. Annual labor costs for the machine irradiators are $4,000 higher because of the higher salary for the maintenance person. Labor costs are large for the papaya irradiators because they are freestanding. Salaried personnel are not shared with the packinghouse, and extra product handlers are needed to load and unload trucks.

Initial investment costs for the machine irradiators are about double those of their cobalt-60 counterparts. Annual costs for all cost components, except for buildings and machinery for the two largest irradiators, are greater for the machine irradiator. The most dramatic disparity in costs between the two approaches is for the radiation source. Annual costs for the initial and replenishment cobalt-60 ranged from approximately $6,000 to $50,000 for the four facilities compared with annual costs for the accelerators of $135,000 to $230,000. The low dose of 0.26 kGy required to control fruit flies means that the largest papaya irradiator needs only about 200,000 curies of cobalt-60. The beam power required to treat an equivalent amount of fruit is about 1.6 kW. However, x rays are needed to penetrate the papaya. Since only 7 percent of the beam power is converted into useful x rays, a higher powered machine, 22 kW, must be purchased and greater utility bills incurred. For example, in spite of fish being irradiated at a higher dose, electricity costs for the fish accelerator are lower than for the papaya accelerator. To treat 48 million pounds a year, the fish accelerator uses $5,000 worth of electricity a year, versus $10,600 for the papaya accelerator in which electron beams are converted to x rays.

Chicken Irradiators

The chicken irradiators span the size range where it is less expensive to use electron beams as opposed to cobalt-60. The biggest cost difference occurs with the radiation source. The annual cost for the accelerator is less than for the cobalt-60, and this difference widens as throughput increases (tables 9 and 13). However, unit costs differ by only 0.1 to 0.4 cent per pound between the two approaches. With the three largest chicken sizes, the initial investment cost is considerably less for machine irradiators.

Under both the machine and cobalt-60 chicken scenarios, the largest size (416 million pounds a year) is assumed to be treated in two irradiators because of the high hourly through-

put (79,000 pounds) that must be handled if only one facility is assumed.[19] The closeness of the unit costs for the two largest chicken irradiators, 0.53 and 0.51 cent per pound for the machine irradiators and 0.89 and 0.86 cent per pound for the cobalt-60 irradiators, reflects how few size economies are possible with this arrangement.

Cobalt-60 gamma rays and electron beams are not perfect substitutes. Electrons from a 7-MeV accelerator penetrate only about 0.75 inch, killing *Salmonellae* on the surface of the chicken parts. The cobalt-60 rays will penetrate the entire piece of chicken. Also, with cobalt-60, the chicken can be treated in shipping boxes. Individual packages of chicken parts must pass under the electron beam, so treatment must be done "in-line" before the packages are boxed.

Treatment of Seasonal Products

Irradiators are likely to operate at less than design capacity during part of the year if irradiation is used to treat seasonal products such as fruits and vegetables. Even commodities grown year round like papaya have definite seasonal harvest patterns. To accommodate the seasonal peaks requiring large hourly capacity, irradiators would have excess capacity during off periods. An unexpected drop in sales would also cause unused capacity. This could occur for many reasons including a change in consumers' incomes and food expenditures, lower prices of substitute foods, negative publicity about a commodity's qualities, or a boycott of irradiated foods. Operating an irradiator at less than design capacity raises unit costs because there is less output over which to spread the high fixed costs.

It has been hypothesized that the diseconomies for seasonal operation will be greater for cobalt-60 irradiators because the cobalt-60 is continually decaying even while no products are being treated. However, the machine facility has a great amount of money tied up in an electron accelerator that is not being fully utilized. Thus, for applications where the fixed costs for cobalt-60 and machine irradiators are equal, one would expect to see similar penalties for under-utilization.

In the earlier cobalt-60 cost analysis, the strawberry irradiators are the only facilities operated seasonally. The strawberry irradiators are assumed to operate three shifts a day, 7 days a week for 4 months of the year, the harvest season for the bulk of California strawberries, or 2,604 processing hours a year. The plant manager is hired for the full year to maintain the irradiator during nonuse. The other employees are assumed to be hired for just 4 months of the year. The radiation safety officer/quality control person, shift supervisors, and plant operators receive a 30-percent bonus to compensate for part-year employment. These same assumptions are applied to the machine irradiator treating strawberries.

Strawberries are assumed to need to be treated with x rays. In this way, they can be treated in protective shipping boxes and not have to be handled in individual flats. The large hourly throughputs of 9,600 to 76,800 pounds and a relatively high 2.0-kGy dose means that beam powers of 100 kW and higher are needed.[20] The processing x ray power needed for the four sizes of strawberry irradiators and the initial beam power required to achieve those powers are shown in table 14.

The maximum installed power for a 4.5-MeV DC accelerator is currently 150 kW. Only the smallest strawberry irradiator is technically feasible if x rays are used.[21] A comparison between the cost of irradiating strawberries for fungi control using cobalt-60 versus an electron accelerator can be

[19] Treating 79,000 pounds an hour with a dose of 2.5 kGy would require a 62-kW machine. A 7-MeV, 62-kW commercial machine has never been built, so it is more conservative to assume two 7-MeV, 31-kW machines. Likewise for the cobalt-60, 2 or 3 million curies is a more common loading for commercial irradiators, so splitting the 7.6-million-curie loading needed for the largest throughput between two side-by-side irradiators is appropriate.

[20] The irradiators treating fish, papaya, and chicken used RF linear accelerators. This type of machine could not be used for the strawberry examples because the maximum beam power assumed in this analysis for RF linacs is 30 kW. Instead, a 4.5-MeV DC accelerator was assumed to be used. At 4.5 MeV, the conversion efficiency to x rays is lower than at 5 MeV. A 6-percent conversion efficiency was used in place of 7 percent. The DC accelerator has a higher system efficiency (60 to 80 percent) than the RF linacs (20 to 30 percent).

[21] Papayas could be treated with x rays because the smaller throughputs of 2,400 to 19,000 pounds an hour combined with a lower dose of 0.26 kGy required initial beam powers of 3 to 22 kW.

Table 14—Beam power requirements for different sized strawberry irradiators

Annual throughput	Hourly throughput[1]	Processing power[2]	Initial beam power[3]
Pounds		*Kilowatts per hour*	
25,000,000	9,600	2.4	100.8
50,000,000	19,200	4.8	201.6
100,000,000	38,400	9.7	403.2
200,000,000	76,800	19.4	806.4

[1]Based on 21 processing hours a day and 125 days available.
[2]Dose of 2 kGy.
[3]Assumes 6-percent efficiency in conversion to x rays, and a net utilization efficiency of 40 percent of the x rays.

made only for the smallest size. Table 15 contrasts the major cost components, initial investments, and unit costs for the cobalt-60 and DC accelerator facilities. Using cobalt-60 to treat the 25 million pounds of strawberries is less costly than using x rays, 2.5 versus 3.4 cents per pound.

An irradiator that treats seasonal products is likely to have peak periods where the daily throughputs could be double the norm for a few weeks or a month. The irradiator needs to be capable of handling this higher hourly rate. While variable costs are reduced when fewer strawberries are treated, the fixed costs for the accelerator or cobalt-60, shielding, machinery, salaried employees, and other factors remain the same (see table 16). If only 12.5 million pounds are treated in an accelerator irradiator designed for 25 million pounds, unit costs are 5.8 cents per pound versus 3.4 cents if the irradiator handles the volume it is designed for during the 4-month period. If the cobalt-60 irradiator is run at half its capacity, unit costs follow the same pattern as the machine irradiator but are lower (see table 16).

Table 15—Strawberry irradiators: Annual costs for major cost categories, initial investment, and unit costs[1]

Cost items	Machine irradiator	Cobalt-60 irradiator
	Dollars	
Radiation source[2] (accelerator or cobalt-60)	250,500	177,400
Buildings and machinery	121,600	127,900
Labor	224,000	222,000
Maintenance	120,000	32,000
Utilities	37,000	16,000
Other[3]	93,800	56,200
Total[4]	847,000	631,500
Initial investment[5]	4,256,000	2,435,000
	Cents per pound	
Cost per pound	3.4	2.5

[1]Annual volume is 25 million pounds. Freestanding irradiators, operated 125 days a year, three shifts per day, 2-kGy dose. For machine irradiator, electron beams are converted to x rays. The estimated costs in this table are based on assumptions listed in appendixes A and B. The costs for the radiation source, buildings, and machinery are the average annual charges in current dollars to recover the original investment (purchase price), plus the opportunity cost of the money spent to buy the assets, over their useful lives (see end of appendix A for the formula).

[2]Annual cost for electron accelerator or initial cobalt-60 and yearly replenishment.

[3]Annual cost for land, working capital, insurance, and taxes.

[4]Numbers may not sum to total because of rounding.

[5]Initial investment includes the 1988 purchase price for the electron accelerator or initial cobalt-60, shielding and other building space, product-handling equipment, refrigerated warehouse space, design and engineering, land, and working capital.

In this example, the machine irradiator has little cost advantage over a cobalt-60 facility in being operated at less than design capacity because both types of irradiators have similar levels of fixed costs. In the larger chicken irradiators where fixed costs are higher for the cobalt-60 irradiators, machine irradiators would have an economic advantage in treating seasonal products.

Conclusions

This analysis estimates the cost of irradiating selected foods in various sizes of facilities using an electron accelerator or cobalt-60 as the radiation source. Treatment costs per pound drop as the volume of food treated increases. Costs vary from 7 cents per pound for an electron accelerator facility irradiating 6 million pounds of fish fillets a year to 0.5 cent per pound for an electron accelerator irradiator treating 416 million pounds of chicken a year (see table 17).

The initial investment, which includes the cost of the radiation source, the radiation shielding, conveyor system, and other ancillary building space and machinery, is greater for electron accelerator facilities until the radiation source requirements reach the equivalent of about 1 million curies of cobalt-60. An irradiator requires a radiation source of this size or larger if it has to treat a large amount of food per hour and/or if the necessary dose is relatively high. In this analysis, the three largest chicken irradiators have cobalt-60 loadings above 1 million curies. Between 20,000 and 79,000 pounds of chicken an hour are irradiated at a dose of 2.5 kGy for these sizes.

Although initial investment costs generally vary by $1 million between the accelerator and cobalt-60 irradiators, unit costs are very similar. For example, unit costs for the fish fillet and chicken irradiators differ on average by less than 0.4 cent between the cobalt-60 and electron accelerator facilities. Unit costs are lower using cobalt-60 when annual throughputs are below 50 million pounds. Annual volumes above 50 million pounds at doses of 1.75 kGy for fish and 2.5 kGy for chicken require cobalt-60 loadings above 900,000 curies where it becomes more economical to use electron beams. The cost efficiency of electron accelerators for large throughputs has been asserted by other researchers (*8, 18*).

The largest difference in unit costs occurs with the papaya irradiators where using cobalt-60 to irradiate the fruit is cheaper on a per-pound basis than converting electron beams to x rays. Source costs are greater for the accelerator because the low conversion efficiency to x rays requires high-power machines, while the cobalt-60 loadings are less than 200,000 curies.

The cost of irradiation may be offset by its benefits (*23*). For example, the papaya industry has seen part of its market disappear because of consumer dissatisfaction with the texture and taste of papayas treated with a double hot water dip in place of the banned ethylene dibromide. Irradiation disinfestation can allow consumers in the continental United States to once again enjoy tree-ripened papayas. A portion of the 20- to 30-percent spoilage losses for fresh fish (*13*) may be lessened if shelf life can be extended.

Economies of size are found to be important over a larger throughput range for irradiators using electron beams or x rays produced by an electron accelerator than for cobalt-60 irradiators. Economies of size are less dramatic for the cobalt-60 irradiators at annual throughputs above 50 million pounds. The accelerator irradiators have significantly declining unit costs at annual throughputs between 50 and 100 million pounds, and even between 100 and 200 million pounds. The greater production economies in source costs and shielding as machine facilities increase in size contribute to this difference in economies of size.

The purpose of studying irradiation's economies of size is to determine how large an irradiator must be to capture the

Table 16—Cost of operating strawberry irradiators at less than design capacity

Type of irradiator	Annual throughput	Annual fixed costs[1]	Annual variable costs[2]	Total costs	Per pound costs	Cost penalty from full utilization
	Pounds	*Dollars*			*Cents per pound*	*Percent*
Machine irradiator:						
100 percent	25,000,000	599,000	248,000	847,000	3.4	0
75 percent	18,750,000	599,000	186,000	785,000	4.2	24
50 percent	12,500,000	599,000	124,000	723,000	5.8	71
25 percent	6,250,000	599,000	62,000	661,000	10.6	212
Cobalt-60 irradiator:						
100 percent	25,000,000	462,000	170,000	632,000	2.5	0
75 percent	18,750,000	462,000	127,500	589,500	3.1	24
50 percent	12,500,000	462,000	85,000	547,000	4.4	76
25 percent	6,250,000	462,000	42,500	504,500	8.1	224

[1]Includes the annual costs for the electron accelerator or initial cobalt-60, shielding and other building space, product-handling equipment, refrigerated warehouse space, design and engineering, land, and working capital. Also annual costs for cobalt-60 replenishment, fixed maintenance, insurance, taxes, and salaried personnel.
[2]Includes wages of shift supervisors/plant operators and product handlers, supplies, utilities, and variable maintenance.

Table 17—Initial investment and treatment costs for electron accelerator and cobalt-60 irradiators[1]

Commodity and annual throughput	Electron accelerator		Cobalt-60	
	Initial investment	Treatment costs	Initial investment	Treatment costs
Million pounds	*Million dollars*	*Cents per pound*	*Million dollars*	*Cents per pound*
Fish fillets:				
6	2.1	6.9	1.2	5.5
12	2.3	3.8	1.2	3.5
24	2.7	2.2	1.4	2.0
48	3.0	1.3	1.8	1.3
Papayas:				
12	2.9	5.8	1.3	4.0
24	3.1	3.1	1.5	2.2
48	3.6	1.9	1.9	1.4
96	4.7	1.2	2.8	.9
Cut-up chicken:				
52	2.8	1.2	2.3	1.3
104	3.1	.7	3.8	1.1
208	4.4	.53	6.5	.89
416	8.8	.51	12.6	.86

[1]The estimated costs in this table are based on assumptions listed in appendixes A and B.

production economies. With the input prices and assumptions used in this analysis, annual volumes above 50 million pounds must be treated to achieve low average treatment costs. Thus, irradiation will be more economical for industries with large plants or geographically centralized production.

Of the four commodities for which costs are estimated, fish fillets, papayas, chicken, and strawberries, only the chicken packing industry has plants with annual volumes above 50 million pounds. About 60 percent of the U.S. whole and cut-up chicken production occurs in plants packing 52 million pounds or more a year (see table 18). The largest California strawberry cooling plants handle 30 to 40 million pounds a year. Fifty-two percent of the U.S. fresh fish fillets are packed by plants with annual volumes of 2.9 million pounds or less (see table 19). The largest plant packs about 16 million pounds of fresh fillets a year. The typical papaya packing plant packs about 10 million pounds of fruit each year, with volumes ranging from 2.5 to 20 million pounds (*27*).

Table 18—Size distribution of U.S. chicken packing plants, FY 1987[1]

Annual volume of whole and cut-up chicken	Plants	Share of U.S. production[2]
Millions of pounds	*Number*	*Percent*
25.9 and less	1,467	15
26 to 51.9	56	26
52 to 77.9	34	25
78 to 103.9	12	12
104 to 129.9	2	3
130 to 155.9	5	8
156 to 181.9	2	4
182 to 207.9	0	0
208 and over	3	7
Total	1,581	100

[1]Includes only whole and cut-up chicken. Does not include chicken used for processed products.
[2]U.S. production of whole and cut-up chicken was about 9 billion pounds in FY 1987.
Source: Food Safety and Inspection Service, U.S. Department of Agriculture.

Table 19—Size distribution of U.S. plants packing fresh fish fillets, 1986[1]

Annual volume	Plants	Share of U.S. production[2]
Millions of pounds	*Number*	*Percent*
2.9 and less	244	52
3 to 5.9	9	19
6 to 11.9	2	7
12 to 15.9	3	22
Total	258	100

[1]Excludes fish from aquaculture enterprises.
[2]Total production of fresh fish fillets by U.S. plants was about 192 million pounds in 1986.
Source: National Marine Fisheries Service, U.S. Department of Commerce.

For irradiation to be compatible with typical packinghouse sizes, low-cost, self-shielded accelerators with low beam powers but energy levels of 5 to 10 MeV would be required. Because such machines do not exist, firms that do not have the volumes to justify an in-house irradiator will have to join with other firms and build a freestanding, centrally located irradiator to treat their combined volumes. Smaller firms can also use the services of a contract irradiator, if available, who will charge a fee for the irradiation treatment. These fees are expected to be higher than costs for an in-house irradiator because the flexibility needed to handle a variety of products sacrifices operational efficiency and raises costs. For seasonal products, however, the contractor's fee may be less than the in-house cost because the contract facility can be more efficiently used by treating other products during the remainder of the year.

Transportation to the irradiator is an added cost for freestanding and contract facilities. As freestanding irradiators increase in size and production density remains constant, they will have to draw on larger geographic areas for products. Transportation costs to the large irradiator may outweigh its gains in production economies. This may bring the total cost of using a small irradiator with its lower transportation costs more closely in line with that of using a large irradiator.

In addition to size, the number of hours of annual operation is an important economic determinant of irradiation costs. Food irradiators that treat seasonal commodities are likely to be idle part of the year. Underutilization raises unit costs, as seen in the strawberry analysis. Proponents of machine irradiation often suggest that an accelerator would be more economical to use for a seasonal food because cobalt-60 is continually decaying. The resources tied up in an expensive machine sitting idle must be weighed against replacing the 12 percent of cobalt-60 lost yearly to decay. When electron accelerators and cobalt-60 irradiators have equal fixed costs, they will exhibit similar diseconomies for seasonal use.

Electron beams and gamma rays are not perfect substitutes. Depending on the density of the food, 10-MeV electron beams penetrate only about 1 to 3 inches when irradiated from one side and about 3 to 8 inches when irradiated from two sides. This penetration limitation restricts the use of electron beams to treating the surface of foods and treating products in individual packages or a shallow stream of

grains, powders, or liquids. An electron beam irradiator must be integrated into a slaughtering or packing house so the food can be treated before it is placed in shipping boxes.

Freestanding irradiators built to treat products shipped from various growers, on the other hand, need to use cobalt-60 or x rays. It is too costly, time consuming, and potentially damaging to unpack the food for treatment with electron beams. X rays have the same penetrating ability as cobalt-60 gamma rays, but converting electron beams to x rays is inefficient. The current power limits of 20 kW for RF linear accelerators and 150 kW for DC accelerators are reduced to about 0.5 and 3.6 kW of x ray processing power, respectively. Also, material processing with x rays is not an established commercial venture. There are currently no industrial electron accelerators operating for a significant portion of time in the x ray mode (*5*). The DOE research irradiators planned for Florida and Iowa will be able to irradiate with both electron beams and x rays. Perhaps these irradiators will provide insight on the suitability of using x rays on foods.

Despite generally favorable responses in test markets to irradiated mangoes and papayas (*2, 14*), U.S. food manufacturers and retailers seem unwilling at this time to risk consumer opposition to irradiated food. Maine has banned the sale of irradiated food in the State while allowing foods containing irradiated spices to be sold. Several other States are considering legislation to ban the sale of irradiated foods or to require more extensive labeling than FDA requires (*11, 31*). Food irradiation opponents have threatened to organize boycotts against manufacturers and supermarkets that sell irradiated food.

Building and operating an irradiator is an expensive undertaking with initial investment costs of $1-$3 million. Food companies may be unwilling to commit such funds to a technology they are uncertain about. Companies can avoid incurring the capital outlay by using the services of the 30 or so contract irradiators in the United States. However, if the contract irradiator is not located near the food company, transportation is costly and consumes some of a perishable food's shelf life.

For food companies to be willing to incur the 1- to 3-cents-per-pound (or higher) cost of irradiation and risk consumer rejection, irradiation must offer superior benefits or answer a critical need facing the industry. Government and industry researchers are continuing to explore new techniques to extend shelf life, reduce disease-causing micro-organisms, and satisfy quarantine requirements. Irradiation must compete with these alternative techniques in terms of cost and acceptance by regulators, producers, retailers, and consumers.

References

1. Berejka, A.J., and others. 1987. "Prospects for Industrial Electron Beam Processing," Paper presented at the 6th International Meeting on Radiation Processing, Ottawa, Canada, May 31-June 5.

2. Bruhn, C.M., and J.W. Noell. 1987. "Consumer In-Store Response to Irradiated Papayas," *Food Technology*, Vol. 41, No. 9, September, pp. 83-85.

3. Brynjolfsson, A. 1973. "Factors Influencing Economic Evaluation of Irradiation Processing," *Factors Influencing the Economical Application of Food Irradiation*, Panel Proceedings Series, Vienna, 1971, Vienna: International Atomic Energy Agency, pp. 13-35.

4. CH2M Hill. 1987. *Final Report, Feasibility Study for Commodities Irradiation Facility in the State of Hawaii*, Prepared for State of Hawaii, Dept. of Planning and Economic Development, May.

5. CH2M Hill. 1988. *Options Analysis, Machine Sources for Food Irradiation*, Prepared for U.S. Dept. of Energy, Advanced Radiation Technology Programs, DOE contract DE-AC04-87AL37515, January.

6. Cleland, M.R. 1988. Chairman of the Board of Radiation Dynamics, Inc., personal communication with author, October 6.

7. Cleland, M.R., C.C. Thompson, and H.F. Malone. 1977. "The Prospects for Very High-Power Electron Accelerators for Processing Bulk Materials," *Radiation Physics and Chemistry*, Vol. 9, pp. 547-566.

8. Cleland, M.R., and G.M. Pageau. 1985. "Electrons Versus Gamma Rays—Alternative Sources for Irradiation Processes," *Food Irradiation Processing*, IAEA-SM-271/54, Vienna: International Atomic Energy Agency, pp. 397-406.

9. Dean, T. 1987. IRT Corp., personal communication with author, December 28.

10. Deitch, J., J.W. Osburne, Jr., and H.W. Ketchum. 1972. *Cost-Benefits Analysis: Potential Radiation Sterilized Military Subsistence Items*, BDC-788-09-71-002, U.S. Dept. of Commerce, Bureau of Domestic Commerce, March.

11. "Draft International Policy Recommends Labeling of Irradiated Foods," 1988. *Food Chemical News*, Vol. 30, No. 22, August 1, pp. 53-55.

12. Farrell, J. Paul, Jr. 1981. "Examination of Product Throughput Obtained from High Power Bremsstrahlung Sources," *IEEE Transactions on Nuclear Science*, Vol. NS-28, No. 2, April, pp. 1786-1793.

13. Flick, G. 1988. Professor, Food Science and Technology Department, Virginia Tech., personal communication with author, November 16.

14. Giddings, G.G. 1986. "Summary of the Puerto Rican Mango Consumer Test Market Experience Initiated and Coordinated by Isomedix Inc.," *Food Irradiation Newsletter*, Vol. 10, No. 2, Vienna: International Atomic Energy Agency, November, pp. 56-57.

15. Goresline, H.E. 1970. *Training Manual on Food Irradiation Technology and Techniques*, Technical Report Series No. 114, Vienna: International Atomic Energy Agency.

16. Haimson, J. 1974. "Advances in Electron Beam Linear Accelerator Technology," *Technical Developments and Prospects of Sterilization by Ionizing Radiation*, eds. E.R.L. Gaughran, and A.J. Goudie, Montreal, Quebec: Multiscience Publication Limited, pp. 71-106.

17. Josephson, E.S. 1983. "An Historical Review of Food Irradiation," *Journal of Food Safety*, Vol. 5, No. 4, pp. 161-190.

18. Klinger, Y., M. Lapidot, and I. Ross. 1985. "Feed Radicidation in Israel—An Update," *Food Irradiation Processing*, IAEA-SM-271/32, Vienna: International Atomic Energy Agency, pp. 117-126.

19. McGee, J.S. 1974. "Efficiency and Economies of Size," *Industrial Concentration: The New Learning*, eds. H.J. Goldschmid, H.M. Mann, and J.F. Weston, Boston: Little, Brown and Co., pp. 55-97.

20. Mongelli, R.C. 1984. *Marketing Fresh Tomatoes: Systems and Costs*, Marketing Research Report, No. 1137, U.S. Dept. of Agriculture, Agricultural Research Service, February.

21. Morrison, R.M. 1985. "Economies of Scale in Single-Purpose Food Irradiators," *Food Irradiation Processing*, IAEA-SM-271/63, Vienna: International Atomic Energy Agency, pp. 407-428.

22. Morrison, R.M., and T. Roberts. 1985. "Food Irradiation—New Perspectives on a Controversial Technology," *Hearings on Federal Food Irradiation Development and Control Act of 1985*. Committee on Agriculture, House of Representatives, November 18, Serial No. 99-14, pp. 994-1157.

23. Morrison, R.M., and T. Roberts. 1987. "Irradiation. It Could Become a Food Preservation Technology for the 1990's," *Choices*, Vol. 2, No. 2, American Agricultural Economics Association, pp. 8-11.

24. Nablo, S.V. 1984. "The Status of the Industrial Use of Selfshielded Electron Processors," TR-120, Paper presented at the International Conference on Applications of Radioisotopes and Radiation in Industrial Development, Bombay, India, March 1-3.

25. Nunan, C.S. 1988. Senior scientist with Varian, personal communication with author, October 25.

26. Sadat, T., and C. Cuillandre. 1987. *A Linear Accelerator in a Chicken Factory*, Buc, France: CGR MeV, September.

27. Souza, R.A. 1985. Manager, Papaya Administrative Committee, personal communication with author, June 4.

28. "Status of Practical Application of Food Irradiation," 1988. *Food Irradiation Newsletter*, Vol. 12, No. 2, Vienna: International Atomic Energy Agency, pp. 42-43.

29. Takeguchi, C. 1988. U.S. Food and Drug Administration, Division of Food and Color Additives, personal communication with author, March 23.

30. U.S. Department of Agriculture, Food Safety and Inspection Service. 1986. "Irradiation of Pork for Control of Trichinella Spiralis," *Federal Register*, Vol. 51, No. 10, pp. 1,769-1,771.

31. U.S. Department of Agriculture, Food Safety and Inspection Service. 1988. "Status of Food Safety and Inspection Service Irradiation Activities," March.

32. U.S. Department of Health and Human Services, Food and Drug Administration. 1985. "Irradiation in the Production, Processing, and Handling of Food," *Federal Register*, Vol. 50, No. 140, pp. 29,658-29,659.

33. U.S. Department of Health and Human Services, Food and Drug Administration. 1986. "Irradiation in the Production, Processing, and Handling of Food," *Federal Register*, Vol. 51, No. 75, pp. 13,376-13,399.

34. Zakladnoi, G.A., and others. 1982. "Industrial Application of Radiation Deinsectification of Grain," Translated from Atomnaya Energina, Vol. 52, No. 1, January, pp. 57-59.

Appendix A—Definitions and Assumptions For Machine Irradiators

Dose — Depends on desired effect:

0.26 kGy—sterilize insects for quarantine reasons.

1.75 kGy—kill spoilage micro-organisms and extend shelf life.

2.0—kill fungi and extend shelf life.

2.5 kGy—kill *Salmonellae* in chicken.

Throughput per hour — Given for each of the three commodities for four throughputs.

Beam power needed for electron beams

$$\text{Number of kW} = \frac{\text{throughput (lbs. per hr.) x dose (kGy) x 0.000126}}{\text{net utilization efficiency}}$$

Net utilization efficiency is assumed to be 40 percent for all irradiators in this analysis. Actual net utilization efficiency depends on the design of the irradiator, which must consider product density and dose uniformity needs. Net utilization efficiency is expressed as a fraction of 1, where 1 = 100-percent beam utilization efficiency.

Beam power needed for x rays

$$\text{Number of kW} = \frac{\text{throughput (lbs. per hr.) x dose (kGy) x 0.000126}}{\text{net utilization efficiency x conversion efficiency}}$$

Conversion efficiency from e-beam to x ray at 5 MeV (the maximum power allowed by FDA) is assumed to be 7 percent. Net utilization efficiency is assumed to be 40 percent. Thus, usable x ray power is 2.8 percent of the beam power.

Energy level — Depends on penetration needed:

Fish—Treatment of entire fillet from one side, 10 MeV electron beams (1.26) inch).

Chicken—Surface treatment on both sides, 7 MeV electron beams (0.88 inch).

Papayas—Complete penetration of fruit in shipping boxes, 5 MeV x rays.

Fixed Costs (All costs expressed in U.S. dollars.)

Integrated and Freestanding Facilities

Accelerator machine — Varies with beam power and energy level.

Installation and verification — $200,000 per accelerator.

Biological shielding — Assumed cost is $600,000 for all throughputs and beam powers for the fish and chicken irradiators. Assumed cost is $675,000 for the papaya and strawberry irradiators because the irradiation cell must be larger to handle shipping boxes. Shielding requirements would not vary significantly over the 2- to 31-kW range in this analysis. Also, irradiation cell size does not increase with larger hourly throughputs. Instead, the conveyor just moves faster or beam is made wider.

Room for machine, power supply, and gas storage — 600 ft^2 at cost of $35/$ft^2$. A 20-percent overhead construction fee is added to the calculated cost.

Conveyor system — Varies with purpose and size.

For fish fillets—simple, one-direction conveyor to handle light packages: $150,000.

For chicken parts—flipping mechanism needed, product passes under the beam twice: $250,000.

For papaya and strawberries—conveyor needs to handle shipping boxes in half pallet arrangement: $250,000.

For integrated chicken and fish facilities, cost of conveyor increases to reflect additional conveying needed

	to collect and return product to packing lines.
Air handling system	$10,000 to $20,000 depending on beam power.
Control room and dosimetry lab	400 ft^2 at cost of $35 per ft^2. A 20-percent overhead construction fee is added to the calculated cost; same as gamma irradiators.
Design and engineering of facility layout, product movement, etc.	Estimated at 10 percent of facility cost minus cost of accelerator.
Fixed maintenance	35 percent of total maintenance (total maintenance estimated at 5 percent of cost of accelerator).
Insurance and taxes	2 percent of facility and land investment, same as gamma irradiators.
Working capital	3 months' bills for labor, maintenance, and utilities, same as gamma irradiators. For irradiators operating only 4 months per year, working capital equals 1 month's bills.
Salaried personnel (annual salaries and benefits)	Plant manager : $45,500. Radiation safety officer/quality control person: $39,000. Maintenance person: $30,000. Clerical person: $18,200. Plant manager, radiation safety officer, and clerical person earn same as in gamma facilities. Maintenance person earns slightly more, $30,000 vs. $26,000 per year, because of the more sophisticated electronics skills needed. Also, for integrated facilities, 50 percent vs. 30 percent of maintenance person's time is allocated to irradiator because of the possibility of more complex repairs. See appendix B for allocation of time in integrated facilities.

Freestanding Facilities Only (papayas and strawberries)

Land	3 acres for trucks to turn around, parking lot, landscaping, etc., at $40,000 per acre (same for all sizes of irradiators). Same as gamma irradiators.
Refrigerated storage	Space needed is based on storing 4 days' worth of throughput in case of unscheduled downtimes or shipping problems. Cost of $54 per ft^2, a 20-percent contruction fee is added to the calculated cost. Same as gamma irradiators of equal throughput.
Additional rooms and bathroom, loading/unloading area	1,000 ft^2 for offices, mechanical room, lunchroom (same for all sizes of irradiators). Same as gamma irradiators of equal throughput. See Appendix B for cost of loading/unloading area.
Forklifts, palletizers	Needed to load and unload trucks and conveyor. For largest papaya irradiator, palletizing and depalletizing machines are used to reduce labor costs. Cost of forklifts and palletizers estimated for five levels of throughput (see appendix table 1).

Variable Costs

Integrated and Freestanding Facilities

Utilities

Machine	kW needed x hours of operation x 4 x $0.047 per kWh. x 4 reflects the loss of power in converting from the power line to the electron beam. This inefficiency is in addition to those discussed under beam power needed. For the strawberry irradiator, 1.7 was used instead of 4 because DC accelerators have higher system efficiencies than RF linear accelerators. $0.047 per kWh was the U.S. average cost of electricity for industrial customers in 1987.

General	Same as gamma facilities of equal throughput.
Variable maintenance	65 percent of total maintenance (total maintenance estimated at 5 percent of the cost of the accelerator).
Hourly labor (annual salaries and benefits)	Shift supervisor and plant operator: $39,000 for second and third shift. Plant operator: $23,400 for first shift. Material handler: $19,500 for each worker per 8-hour shift. Plant operators and product handlers earn same as in gamma facilities. Number of product handlers is the same as gamma facility of equal hourly throughput (see Appendix B).

Fixed costs for the accelerator facilities are annualized in the same manner as in the gamma irradiation analysis. The capital recovery factor estimates the levelized annual charge in current dollar values to recover the original investment (purchase price), plus the opportunity cost of the money spent to buy the asset, over the useful life of the asset. Asset is assumed to have no salvage value. All calculations assume constant prices.

$$\text{Annual charge} = K \times \frac{i(1+i)^n}{(1+i)^n - 1}$$

Where : K = original investment
i = real interest rate (assumed to be 5 percent)
n = number of years of useful life

The useful life of the accelerator is assumed to be 15 years to be comparable to the 15-year useful life of cobalt-60. The useful lives for the other capital assets are assumed to be 25 years for buildings and biological shielding and 10 years for conveyor system and other machinery.

The other fixed costs are treated as follows:

land for freestanding irradiators	5 percent of investment
working capital	5 percent of investment
fixed maintenance insurance and taxes salaried employees	} current cost items

$$\text{Unit cost in dollars per lb.} = \frac{\text{total variable cost} + \text{total annualized fixed cost}}{\text{throughput per year in lbs.}}$$

Appendix B—Definitions and Assumptions for Cobalt-60 Irradiators

Curie load

$$\text{Number of curies} = \frac{8.5 \times \text{throughput (lbs. per hr.)} \times \text{dose (kGy)}}{\text{net utilization efficiency}}$$

Net utilization efficiency is assumed to be 25 percent for all irradiators for this analysis. Actual net utilization efficiency depends on the design of the irradiator, which must consider product density and dose uniformity needs. Net utilization efficiency is expressed as a fraction of 1, where 1 = 100-percent cobalt-60 utilization efficiency.

An additional 12.5 percent for yearly decay is added to initial loading for those irradiators operating year round.

Price of cobalt-60 (including delivery and loading charges) is assumed to be $1.20 per curie for amounts above 200,000 curies. For smaller amounts, cobalt-60 is assumed to cost $1.25 per curie.

Source replenishment	12.5 percent required each year to maintain previous year's throughput.

Fixed Costs (All costs expressed in U.S. dollars)

Integrated and Freestanding Facilities

Biological shielding — Costs for concrete cell and labyrinth and water-filled pool estimated for five throughput levels as follows:

100 ft^3/hr	$570,000
250 ft^3/hr	$600,000
550 ft^3/hr	$650,000
1,000 ft^3/hr	$700,000
2,500 ft^3/hr	$1,100,000

Irradiator machinery: Costs estimated for five throughput levels as follows:

- source hoist and plaque
- control panel
- mechanical interlocks

} A

- conveyor
- carriers

} B

	A	B
100 ft^3/hr	$150,000 +	$80,000
250 ft^3/hr	$50,000 +	$100,000
550 ft^3/hr	$175,000 +	$150,000
1,000 ft^3/hr	$200,000 +	$300,000
2,500 ft^3/hr	$225,000 +	$550,000

Auxiliary systems: Costs estimated for five throughput levels as follows:

- de-ionizer
- chiller
- air handling

100 ft^3/hr	$40,000
250 ft^3/hr	$50,000
550 ft^3/hr	$50,000
1,000 ft^3/hr	$50,000
2,500 ft^3/hr	$55,000

For irradiators with loadings less than 500,000 curies of cobalt-60, pool chiller not needed and $20,000 subtracted from above estimates.

Control room and dosimetry lab: 400 ft^2 at cost of $35 per ft^2. A 20-percent overhead construction fee is added to the calculated cost.

Forklifts, palletizers: Cost of forklifts and palletizers estimated for five levels of throughput (See appendix table 1).

Design and engineering of facility layout, product movement, cobalt-60 utilization, etc. Varies widely with experience and knowledge base.: Estimated at 10 percent of facility cost minus cost of cobalt-60.

Fixed maintenance: 35 percent of total maintenance (total maintenance estimated at 1.5 percent of facility cost).

Insurance and taxes: 2 percent of facility and land investment.

Working capital: 3 months' bills for labor, supplies, and utilities. For irradiators operating only 4 months per year, working capital equals 1 month's bills.

Salaried personnel (annual salaries and benefits): Plant manager: $45,500. For integrated facility, only 15 percent of manager's time allocated to irradiator.

Radiation safety officer/quality control (RSO/QC): $39,000.

Maintenance person: $26,000. For integrated facility, only 30 percent of maintenance person's time allocated to irradiator.

The above personnel work only one shift a day and are considered "on call" for emergencies.

Clerical: $18,200. For integrated facility, only 50 percent of clerical person's time allocated to irradiator. Clerical person works only one shift a day.

Freestanding Facilities Only (papayas and strawberries)

Land: 3 acres for trucks to turn around, parking lot, landscaping, etc., at $40,000 an acre (same for all sizes of irradiators). Actual land costs vary widely.

Refrigerated warehouse: Space needed is based on storing 4 days' worth of throughput in case of unscheduled downtimes or shipping problems. Cost of $54 per ft^2, a 20-percent overhead construction fee is added to the calculated cost.

Additional rooms and loading/unloading area: 1,000 ft^2 for offices, mechanical room, bathroom, and lunchroom (same for all sizes of irradiators).

Loading and unloading area depends on throughput and is estimated as follows:

100 ft^3/hr	400 ft^2
250 ft^3/hr	400 ft^2
550 ft^3/hr	400 ft^2
1,000 ft^3/hr	800 ft^2
2,500 ft^3/hr	2,000 ft^2

	Cost of \$35 per ft^2, a 20-percent overhead construction fee is added to the calculated cost.

Variable Costs

Integrated and Freestanding Facilities

Supplies	1.6 percent of facility cost.
Utilities	2 percent of facility cost, plus \$0.112 per ft^3 of refrigerated warehouse space.
Variable maintenance	65 percent of total maintenance (total maintenance estimated at 1.5 percent of facility cost).
Hourly labor (annual salaries and benefits)	Shift supervisor and plant operator: \$39,000 for second and third shift.
	Plant operator: \$23,400 for first shift.
	Material handler: \$19,500 for each worker per 8-hour shift.
	Number of handlers needed estimated for five throughput levels (see appendix table 1).
	(No provision is made for wage differentials for second and third shifts or weekend work. When irradiator is operated 7 days a week, fixed and variable labor costs are adjusted accordingly.)

Fixed costs for the cobalt-60 facilities are annualized in the same manner as the fixed costs for the accelerator facilities (see end of appendix A). The useful life for the cobalt-60 is assumed to be 15 years, and yearly cobalt-60 replenishment is treated as a current cost item.

Appendix table 1—Number of product handlers needed for five sizes of irradiators

Hourly throughput (ft^3)	Pallets/ hour[1]	Worker-hours per pallet	Handlers per shift to run irradiator[2]	Handlers to unload trucks[3]	Total handlers per day
			Number		
100 (hand)	2	0.28[4]	1	0.3	3.3
250 (hand)	3	.28	1	.4	3.4
550 (hand)	7	.28	2	1	7
1,000 (palletizers)	12	.103[5] + 1	3	2	11
2,500 (palletizers)	29	.103 + 2	5	4	19

[1]Although the ft^3 per pallet differs between products and shippers, one pallet is assumed = 48″ x 40″ x 78″ = 149,760″ or approximately 87 ft^3 (Source: AMS marketing specialist, U.S. Dept. Agr.). Pallets/hour rounded up to next whole pallet.
[2]Number of product handlers needed per shift rounded up to next whole person.
[3]See Appendix table 2 for calculations. Trucks unloaded during one shift.
[4]Source (with modifications): (*20*, table 6).
[5]Source: (*20*, table 8). The extra one or two handlers are needed for the depalletizer(s).

Appendix table 2—Product-handling machinery costs for five sizes of irradiators

Hourly throughput (ft^3)	Truckloads per day[1]	Truckloads per hour[2]	Worker hour per truckload[3]	Handlers per day to unload trucks[4]	Forklift cost[5]	Palletizer cost[6]
	Number				*Dollars*	
100 (hand)	2.3	0.3	0.93	0.3	30,000	0
250 (hand)	3.5	.4	.93	.4	30,000	0
550 (hand)	8.2	1.0	.93	1	30,000	0
1,000 (palletizers)	14.0	1.8	.93	2	30,000	168,000
2,500 (palletizers)	33.8	4.2	.93	4	45,000	272,000

[1]Truckloads per day = (No. of pallets per hour x 21 hours) divided by 18 pallets per truck.
[2]Trucks arrive and are unloaded during one 8-hour shift.
[3]Source: (*20*, table 8).
[4]For largest irradiators, number of handlers needed rounded up to next whole person.
[5]Cost of forklift is $15,000 each.
[6]A semiautomatic depalletizer can handle about 24 pallets per hour and requires one handler. The installed cost of the machine plus roller conveyor is assumed to be $84,000. An automatic palletizer can handle many more pallets per hour and does not require a handler. The price of an automatic palletizer varies with its speed. The costs of the palletizers used in this analysis are assumed to be $84,000 for 1,000 ft^3hr., and $104,000 for 2,500 ft^3hr. Source: Robin Poppel, Systems Manager for Columbia Machines, Vancouver, WA.

Appendix table 3—Capital investment and annual fixed and variable costs for integrated electron accelerator fish irradiators by annual throughput[1]

Item	6 million pounds	12 million pounds	24 million pounds	48 million pounds
		Thousand dollars		
Investment items:				
Accelerator—				
Machine	1,000	1,200	1,500	1,800
Installation	200	200	200	200
Total	1,200	1,400	1,700	2,000
Biological shielding	600	600	600	600
Room for machine and gas storage	25	25	25	25
Conveyor system	150	150	160	170
Air handling system	10	10	20	20
Control room and dosimetry lab	17	17	17	17
Forklifts, palletizers	0	0	0	0
Refrigerated warehouse	0	0	0	0
Additional rooms	0	0	0	0
Design and engineering	80	80	82	83
Land	0	0	0	0
Working capital	46	49	59	70
Total initial investment	2,128	2,331	2,663	2,985
Annualized fixed costs:[2]				
Accelerator	116	135	164	193
Building and shielding	51	51	51	51
Machinery	21	21	23	25
Land	0	0	0	0
Working capital	2	2	3	4
Fixed maintenance	18	21	26	32
Insurance and taxes	42	46	52	58
Salaried employees—				
Plant manager	7	7	7	7
Radiation safety officer/ quality control	39	39	39	39
Maintenance	15	15	15	15
Clerical	9	9	9	9
Total	70	70	70	70
Total annual fixed costs	320	346	389	432
Annual variable costs:				
Labor—				
Plant operator	23	23	23	23
Product handlers[3]	(1) 20	(1) 20	(2) 39	(3) 59
Utilities—				
Machine	.6	1	2	5
General	19	21	26	34
Variable maintenance	33	39	49	59
Total annual variable costs	96	104	140	180
		Dollars per pound		
Unit cost	0.0693	0.0375	0.022	0.0128
		Pounds		
Throughput per hour	3,570	7,140	14,280	28,560
		kW		
Beam power needed	1.97	3.94	7.87	15.74

[1]Integrated facility, year-round operation, 5 days per week, one shift per day, 1.75-kGy dose. 10-MeV electron beams are used. The estimated costs in this table are based on a specific set of assumptions listed in appendix A. Totals may not add due to rounding.
[2]Fixed costs are annualized according to formula in appendix A.
[3]The numbers in parentheses are the number of product handlers needed per day.

Appendix table 4—Capital investment and annual fixed and variable costs for freestanding electron accelerator papaya irradiators by annual throughput[1]

Item	12 million pounds	24 million pounds	48 million pounds	96 million pounds
		Thousand dollars		
Investment items:				
Accelerator—				
Machine	1,200	1,400	1,700	2,200
Installation	200	200	200	200
Total	1,400	1,600	1,900	2,400
Biological shielding	675	675	675	675
Room for machine and gas storage	25	25	25	25
Conveyor system	250	250	250	250
Air handling system	10	10	20	20
Control room and dosimetry lab	17	17	17	17
Forklifts, palletizers[2]	30	30	30	198
Refrigerated warehouse	70	140	281	562
Additional rooms	59	59	59	76
Design and engineering	114	121	136	182
Land	120	120	120	120
Working capital	96	101	126	161
Total initial investment	2,866	3,148	3,639	4,686
Annualized fixed costs:[3]				
Accelerator	135	154	183	231
Building and shielding	68	74	85	109
Machinery	38	38	39	61
Land	6	6	6	6
Working capital	5	5	6	8
Fixed maintenance	21	25	30	39
Insurance and taxes	55	61	70	91
Salaried employees—				
Plant manager	46	46	46	46
Radiation safety officer/ quality control	39	39	39	39
Maintenance	30	30	30	30
Clerical	18	18	18	18
Total	133	133	133	133
Total annual fixed costs	460	495	552	678
Annual variable costs:				
Labor—				
Plant operators/shift supervisors	101	101	101	101
Product handlers[4]	(3.3) 64	(3.4) 66	(7) 137	(11) 215
Utilities—				
Machine	3	5	11	21
General	23	28	37	61
Variable maintenance	39	46	55	72
Total annual variable costs	230	246	341	470
		Dollars per pound		
Unit cost	0.0575	0.0309	0.0186	0.012
		Pounds		
Throughput per hour	2,380	4,760	9,520	19,050
		kW		
Beam power needed for x ray	2.79	5.57	11.14	22.29

[1]Freestanding facility, year-round operation, 5 days per week, three shifts per day, 0.26-kGy dose. 5 MeV electron beams are converted to x rays. The estimated costs in this table are based on a specific set of assumptions listed in appendix A. Totals may not add due to rounding.

[2]The largest papaya irradiator uses palletizing and depalletizing machinery.

[3]Fixed costs are annualized according to formula in appendix A.

[4]The numbers in parentheses are the number of handlers needed per day.

Appendix table 5—Capital investment and annual fixed and variable costs for integrated electron accelerator chicken irradiators by annual throughput[1]

Item	52 million pounds	104 million pounds	208 million pounds	416 million pounds[2]
		Thousand dollars		
Investment items:				
Accelerator—				
Machine	1,500	1,800	3,000	6,000
Installation	200	200	200	400
Total	1,700	2,000	3,200	6,400
Biological shielding	600	600	600	1,200
Room for machine and gas storage	25	25	25	50
Conveyor system	250	265	300	600
Air handling systems	10	20	20	40
Control room and dosimetry lab	17	17	17	25
Forklifts, palletizers	0	0	0	0
Refrigerated warehouse	0	0	0	0
Additional rooms	0	0	0	0
Design and engineering	90	93	96	192
Land	0	0	0	0
Working capital	74	102	149	280
Total initial investment	2,766	3,122	4,407	8,787
Annualized fixed costs:[3]				
Accelerator	164	193	308	617
Building and shielding	52	52	52	104
Machinery	34	37	41	83
Land	0	0	0	0
Working capital	4	5	7	14
Fixed maintenance	26	32	53	105
Insurance and taxes	54	60	85	170
Salaried employees—				
Plant manager	7	7	7	7
Radiation safety officer/ quality control	39	39	39	39
Maintenance	15	15	15	30
Clerical	9	9	9	9
Total	70	70	70	85
Total annual fixed costs	403	449	618	1,178
Annual variable costs:				
Labor—				
Plant operators/shift supervisors	101	101	101	203
Product handlers[4]	(0) 0	(3) 59	(6) 117	(12) 234
Utilities—				
Machine	8	15	31	62
General	44	71	128	237
Variable maintenance	49	59	98	195
Total annual variable costs	202	305	475	931
		Dollars per pound		
Unit costs	0.0116	0.0073	0.0053	0.0051
		Pounds		
Throughput per hour	9,905	19,810	39,620	79,240
		kW		
Beam power needed	7.8	15.6	31.2	62.4

[1]Integrated facility, year-round operation, 5 days per week, three shifts per day, 2.5-kGy dose. 7-MeV electron beams are used. The estimated costs in this table are based on a specific set of assumptions listed in appendix A. Totals may not add due to rounding.
[2]The throughput for the largest irradiator is split between two accelerators.
[3]Fixed costs are annualized according to formula in appendix A.
[4]The numbers in parentheses are the number of product handlers needed per day.

Appendix table 6—Capital investment and annual fixed and variable costs for integrated cobalt-60 fish irradiators by annual throughput[1]

Item	6 million pounds	12 million pounds	24 million pounds	48 million pounds
		Thousand dollars		
Investment items:				
Initial cobalt-60	287	199	382	765
Biological shielding	570	570	600	600
Irradiator machinery	230	230	250	250
Auxiliary systems	20	20	30	50
Control room and dosimetry lab	17	17	17	17
Forklifts, palletizers	0	0	0	0
Refrigerated warehouse	0	0	0	0
Additional rooms	0	0	0	0
Design and engineering	84	84	90	92
Land	0	0	0	0
Working capital	36	65	68	72
Total initial investment	1,244	1,185	1,437	1,846
Annualized fixed costs:[2]				
Cobalt-60—				
Initial loading	28	19	37	74
Replenishment	33	22	44	89
Building and shielding	48	48	50	50
Machinery	32	32	36	39
Land	0	0	0	0
Working capital	2	3	3	4
Fixed maintenance	6	5	7	9
Insurance and taxes	24	22	27	35
Salaried employees—				
Plant manager	7	7	7	7
Radiation safety officer/ quality control	39	39	39	39
Maintenance	8	8	8	8
Clerical	9	9	9	9
Total	63	63	63	63
Total annual fixed costs	236	215	268	362
Annual variable costs:				
Labor—				
Plant operators/shift supervisors	23	101	101	101
Product handlers[3]	(1) 20	(3) 59	(3) 59	(3) 59
Supplies	15	17	22	31
Utilities	22	21	26	34
Variable maintenance	11	10	12	16
Total annual variable costs	91	208	220	241
		Dollars per pound		
Unit cost	0.0545	0.0352	0.0203	0.0126
		Pounds		
Throughput per hour	3,570	2,380	4,760	9,520

[1]Integrated facility, year-round operation, 5 days per week. The smallest irradiator operates one shift per day, and the other three operate three shifts per day. The estimated costs in this table are based on a specific set of assumptions listed in appendix B. Totals may not add due to rounding.

[2]Fixed costs are annualized according to formula in appendix A.

[3]The numbers in parentheses are the number of product handlers needed per day.

Appendix table 7—Capital investment and annual fixed and variable costs for freestanding cobalt-60 papaya irradiators by annual throughput[1]

Item	12 million pounds	24 million pounds	48 million pounds	96 million pounds
		Thousand dollars		
Investment items:				
Initial cobalt-60	30	59	118	237
Biological shielding	570	600	650	700
Irradiator machinery	230	250	325	500
Auxiliary systems	20	30	30	30
Control room and dosimetry lab	17	17	17	17
Forklifts, palletizers[2]	30	30	30	198
Refrigerated warehouse	70	140	281	562
Additional rooms	59	59	59	76
Design and engineering	100	113	139	208
Land	120	120	120	120
Working capital	83	86	107	136
Total initial investment	1,329	1,504	1,876	2,784
Annualized fixed costs:[3]				
Cobalt-60—				
Initial loading	3	6	11	23
Replenishment	3	7	13	26
Building and shielding	58	66	81	111
Machinery	36	40	50	94
Land	6	6	6	6
Working capital	4	4	5	7
Fixed maintenance	5	6	8	12
Insurance and taxes	25	28	35	53
Salaried employees—				
Plant manager	46	46	46	46
Radiation safety officer/ quality control	39	39	39	39
Maintenance	26	26	26	26
Clerical	18	18	18	18
Total	129	129	129	129
Total annual fixed costs	269	292	339	461
Annual variable costs:				
Labor—				
Plant operators/shift supervisors	101	101	101	101
Product handlers[4]	(3.3) 64	(3.4) 66	(7) 137	(11) 215
Supplies	15	18	23	39
Utilities	23	28	37	61
Variable maintenance	10	12	15	23
Total annual variable costs	213	225	313	439
		Dollars per pound		
Unit cost	0.0402	0.0215	0.0136	0.0094
		Pounds		
Throughput per hour	2,380	4,760	9,520	19,050

[1]Freestanding facility, year-round operation, 5 days per week, three shifts per day, 0.26-kGy dose. The estimated costs in this table are based on a specific set of assumptions listed in appendix B. Totals may not add due to rounding.
[2]The largest papaya irradiator uses palletizing and depalletizing machinery.
[3]Fixed costs are annualized according to the formula in appendix A.
[4]The numbers in parentheses are the number of product handlers needed per day.

Appendix table 8—Capital investment and annual fixed and variable costs for integrated cobalt-60 chicken irradiators by annual throughput[1]

Item	52 million pounds	104 million pounds	208 million pounds	416 million pounds[2]
		Thousand dollars		
Investment items:				
Initial cobalt-60	1,137	2,273	4,546	9,093
Biological shielding	650	700	900	1,500
Irradiator machinery	325	500	638	1,276
Auxiliary systems	50	50	53	106
Control room and dosimetry lab	17	17	17	25
Additional conveyors	0	15	50	100
Refrigerated storage	0	0	0	0
Additional rooms	0	0	0	0
Design and engineering	104	128	166	301
Land	0	0	0	0
Working capital	61	88	128	237
Total initial investment	2,344	3,771	6,498	12,638
Annualized fixed costs:[3]				
Cobalt-60—				
Initial loading	110	219	438	876
Replenishment	132	253	505	1,010
Building and shielding	55	60	77	130
Machinery	49	73	96	192
Land	0	0	0	0
Working capital	3	4	6	12
Fixed maintenance	11	19	33	64
Insurance and taxes	46	74	127	248
Salaried employees—				
Plant manager	7	7	7	7
Radiation safety officer/ quality control	39	39	39	39
Maintenance	8	8	8	16
Clerical	9	9	9	9
Total	63	63	63	70
Total annual fixed costs	467	765	1,345	2,602
Annual variable costs:				
Labor—				
Plant operators/shift supervisors	101	101	101	203
Product handlers[4]	(0) 0	(3) 59	(6) 117	(12) 234
Supplies	35	58	107	199
Utilities	44	71	124	242
Variable maintenance	21	35	60	118
Total annual variable costs	201	324	509	996
		Dollars per pound		
Unit cost	0.0128	0.0105	0.0089	0.0086
		Pounds		
Throughput per hour	9,905	19,810	39,620	79,240

[1]Integrated facility, year-round operation, 5 days per week, three shifts per day, 2.5-kGy dose. The estimated costs in this table are based on a specific set of assumptions listed in appendix B. Totals may not add due to rounding.
[2]The throughput for the largest irradiator is split between two cobalt-60 sources.
[3]Fixed costs are annualized according to the formula in appendix A.
[4]The numbers in parentheses are the number of product handlers needed per day.

Appendix table 9—Capital investment and annual fixed and variable costs for freestanding strawberry irradiators[1]

Item	Electron accelerator[2]	Cobalt-60
	Thousand dollars	
Investment items:		
Accelerator—		
Machine	2,400	—
Installation	200	—
Total	2,600	—
Initial cobalt-60	—	783
Biological shielding	675	650
Room for machine and gas storage	25	—
Conveyor system	250	325
Air handling system	50	50
Control room and dosimetry lab	17	17
Forklifts, palletizers	30	30
Refrigerated warehouse	204	204
Additional rooms	59	59
Design and engineering	131	134
Land	120	120
Working capital	95	63
Total initial investment	4,256	2,435
Annualized fixed costs:[3]		
Accelerator	250	—
Cobalt-60—		
Initial	—	75
Replenishment	—	102
Building and shielding	79	75
Machinery	43	52
Land	6	6
Working capital	5	3
Fixed maintenance	42	11
Insurance and taxes	83	47
Salaried employees—		
Plant manager	46	46
Radiation safety officer/quality control	23	23
Maintenance	14	12
Clerical	8	8
Total	91	89
Total annual fixed costs	599	462
Annual variable costs:		
Labor—		
Plant operators/shift supervisors	70	70
Product handlers[4]	(7) 63	(7) 63
Utilities:		
Machine	21	—
General	16	16
Supplies	—	14
Variable maintenance	78	7
Total annual variable costs	248	170
	Dollars per pound	
Unit cost	0.0339	0.0253
	Pounds	
Throughput per hour	9,600	9,600
	kW	
Beam power needed	100.8	—

— = not applicable.

[1]Freestanding irradiator, operated 125 days a year, three shifts per day, 2.0-kGy dose. Annual throughput is 25 million pounds. The estimated costs in this table are based on a specific set of assumptions listed in Appendixes A and B. Totals may not add due to rounding.

[2]4.5-MeV electron beams are converted to x rays.

[3]Fixed costs are annualized according to the formula in appendix A.

[4]The number in parentheses is the number of product handlers needed per day.

Get these timely reports from USDA's Economic Research Service

These periodicals bring you the latest information on food, the farm, and rural America to help you keep your expertise up-to-date. Order these periodicals today to get the latest facts, figures, trends, and issues from ERS.

Agricultural Outlook. Presents USDA's farm income and food price forecasts. Emphasizes the short-term outlook, but also presents long-term analyses of issues ranging from international trade to U.S. land use and availability. 11 issues annually. 1 year, $22; 2 years, $43; 3 years, $63.

Farmline. Concise, fact-filled articles focus on economic conditions facing farmers, how the agricultural environment is changing, and the causes and consequences of those changes for farm and rural people. 11 issues annually. *1 year, $11; 2 years, $21; 3 years, $30.*

National Food Review. Offers the latest developments in food prices, product safety, nutrition programs, consumption patterns, and marketing. 4 issues annually. *1 year, $10; 2 years, $19; 3 years, $27.*

Economic Indicators of the Farm Sector. Updates economic trends in U.S. agriculture. Each issue explores a different aspect of income and expenses: national and State financial summaries, production and efficiency statistics, costs of production, and an annual overview. 5 issues annually. *1 year, $12; 2 years, $23; 3 years, $33.*

Rural Development Perspectives. Crisp, nontechnical articles on the results of new rural research and what those results mean. 3 issues annually. *1 year, $9; 2 years, $17; 3 years, $24.*

The Journal of Agricultural Economics Research. Technical research in agricultural economics, including econometric models and statistics focusing on methods employed and results of USDA economic research. 4 issues annually. *1 year, $7; 2 years, $13; 3 years, $18.*

Foreign Agricultural Trade of the United States. Updates the quantity and value of U.S. farm exports and imports, plus price trends. 8 issues annually. *1 year, $20; 2 years, $39; 3 years, $57.*

Situation and Outlook Reports. These reports provide timely analyses and forecasts of all major agricultural commodities and related topics such as finance, farm inputs, land values, and world and regional developments. Each *Situation and Outlook* title costs *1 year, $10; 2 years, $19; 3 years, $27.* Titles include:

Agricultural Exports	*Cotton and Wool*	*Oil Crops*	*Vegetables and Specialties*
Agricultural Income and Finance	*Dairy*	*Rice*	*Wheat*
Agricultural Resources	*Feed*	*Sugar and Sweeteners*	*World Agriculture*
Aquaculture	*Fruit and Tree Nuts*	*Tobacco*	*World Agriculture Regionals*

Also available: *Livestock and Poultry:* 1 year, $15; 2 years, $29; 3 years, $42.

Add 25 percent for shipments to foreign addresses (includes Canada). Sorry, no refunds.

To subscribe to these periodicals, or for more information, call toll free 1-800-999-6779 (8:30-5:00 ET) , or write to:

ERS-NASS
P.O. Box 1608
Rockville, MD 20850

NATIONAL AGRICULTURAL LIBRARY
1022855978