[redacted]
Ag84Te

LINEAR THEORY OF HYDROLOGIC SYSTEMS

Technical Bulletin No. 1468

U.S. DEPT. OF AGRICULTURE
NAT'L AGRIC. LIBRARY
RECEIVED
APR 1 '74
PROCUREMENT SECTION
CURRENT SERIAL RECORDS

Agricultural Research Service
UNITED STATES DEPARTMENT OF AGRICULTURE

413771

LINEAR THEORY OF HYDROLOGIC SYSTEMS

Technical Bulletin No. 1468

Agricultural Research Service

UNITED STATES DEPARTMENT OF AGRICULTURE

Washington, D.C. Issued October 1973

For sale by the Superintendent of Documents, U.S. Government Printing Office
Washington, D.C. 20402—Price $2.80
Stock Number 0100-02747

PREFACE

This publication is a shortened version of lectures given by Professor J. C. I. Dooge, Department of Civil Engineering, University College, Dublin, Ireland, in August 1967 at the Department of Agricultural Engineering, University of Maryland, under the sponsorship of the Agricultural Research Service, U.S. Department of Agriculture. Professor Dooge is a world authority on hydrologic systems, which are basic to computations for successfully planning the best use of soil and water resources in agricultural watersheds.

The original course consisted of 18 lectures supplemented by problem sessions and seminars; however, this publication is confined to the first 10 lectures, which dealt with the general principles of the linear theory of deterministic hydrologic systems. Some important material, originally dealt with in later lectures, has been included in summary form in lectures 7, 8, 9, and 10 of this publication.

Trade names are used in this publication solely for the purpose of providing specific information. Mention of a trade name does not constitute a guarantee or warranty of the product by the United States Department of Agriculture or an endorsement by the Department over other products not mentioned.

ACKNOWLEDGMENTS

The ideas outlined in these lectures reflected the contribution of a very large number of research workers to the development of parametric hydrology. Where possible my indebtedness has been clearly acknowledged in the cited references. Apologies are offered for any failure to acknowledge such indebtedness. Apart from published papers and formal discussions, I have benefited greatly from many stimulating informal discussions with colleagues. In this connection I must particularly acknowledge the influence on my thinking and my work of Eamonn Nash, Terence O'Donnell, and Dirk Kraijenhoff. I mention these three among my colleagues because I have continually turned to them over the years for stimulation or for comments on work in progress.

The material of the lectures which follows was a development in more comprehensive form of material which was the subject of seminars given at Imperial College London, the University of New South Wales, and The University of Wageningen. The initiative for giving the lectures came from Heggie Holtan who was a continual source of encouragement. In the detailed planning of the lectures, I received invaluable assistance from Don Brakensiek.

CONTENTS

Introduction 1
LECTURE 1: HYDROLOGIC SYSTEMS 3
The Systems Approach 3
Linear Time-Invariant Systems 17
Identification and Simulation 29
Problems on Hydrologic Systems 39
Literature Cited 40
LECTURE 2: REVIEW OF PHYSICAL HYDROLOGY 43
Precipitation 44
Evaporation and Transpiration 45
Infiltration and Percolation 47
Ground Water Flow 48
Overland Flow and Channel Flow 50
Problems on Physical Hydrology 53
Literature Cited 54
LECTURE 3: REVIEW OF MATHEMATICS 58
Orthogonal Polynomials and Functions 58
Fourier and Laplace Transforms 62
Differential Equations 65
Matrices 67
Numerical Methods 70
Problems on Mathematics 71
Literature Cited 73
LECTURE 4: CLASSICAL METHODS OF RUNOFF PREDICTION 75
The Outflow Hydrograph 75
The Rational Method 79
Unit Hydrograph Concepts 84
Separation of Base Flow 89
Analysis of Complex Storms 93
Problems on Classical Methods 97
Literature Cited 98
LECTURE 5: IDENTIFICATION BASED ON CONTINUOUS DATA 102
Transform Methods of Identification 102
Analysis by Fourier Series 105
Analysis by Fourier and Laplace Transforms 108
Moments and Cumulants 113
Laguerre Analysis of Systems 117
Time-Series Analysis 121
Problems on Identification Based on Continuous Data 124
Literature Cited 125

LECTURE 6: IDENTIFICATION BASED ON DISCRETE DATA 127
Basic System Equations 127
Matrix Methods of Identification 130
Discrete Transform Methods 133
Time-Series Analysis of Discrete Data 138
Computational Methods 141
Problems on Discrete Systems Identification 145
Literature Cited 146
LECTURE 7: SIMULATION OF HYDROLOGIC SYSTEMS 148
Basic Ideas in Simulation 148
Regression Models 151
Digital Simulation 160
Optimization 169
Analogs and Physical Models 175
Problems on Simulation 184
Literature Cited 185
LECTURE 8: SYNTHETIC UNIT HYDROGRAPHS 190
Types of Synthetic Unit Hydrographs 190
Time-Area Methods 193
Empirical Expressions for Unit Hydrograph Parameters 200
Empirical Shapes for the Unit Hydrograph 206
Conceptual Models of the Unit Hydrograph 209
Comparison of Methods 216
Problems on Synthetic Unit Hydrographs 224
Literature Cited 227
LECTURE 9: MATHEMATICAL SIMULATION OF SURFACE FLOW 232
Overland Flow 232
Unsteady Flow in Open Channels 243
Problems on Surface Flow 261
Literature Cited 262
LECTURE 10: CONCEPTUAL MODELS OF SUBSURFACE FLOW 267
Movement of Soil Moisture 267
Unsteady Movement of Soil Moisture 272
Comparison of Infiltration Formulas 278
Basic Equations of Ground Water Flow 283
Problems on Subsurface Flow 291
Literature Cited 293
List of Symbols 296
APPENDIX TABLES 300
AUTHOR INDEX 316
SUBJECT INDEX 323

1468, 327 p. OCT 1973.

LINEAR THEORY OF HYDROLOGIC SYSTEMS

By James C. I. Dooge[1]

INTRODUCTION

These lectures were designed to introduce participants to the theory of deterministic hydrologic systems. In recent years, this theory has been named "parametric hydrology," but is also known as "dynamic hydrology" or "deterministic hydrology." One object of the course was to make the participants aware of certain theories and techniques rather than to give them a perfect knowledge of the theory or a complete mastery of the techniques. Attention was directed to the essential unity underlying the many methods that have appeared in the hydrologic literature as seemingly unrelated to one another. Another aim of the course was to reformulate established concepts and techniques in terms of a general systems approach and thus to extend their usefulness.

This publication follows the organization of the original course and is divided into lectures. Lecture 1, which is far longer than any other, consists of a preview of the subject matter of the whole course. This is followed by two review lectures, one on physical hydrology and the other on the mathematics required for the study of deterministic hydrologic systems. Lectures 4, 5, and 6 deal essentially with the problem of the identification of deterministic hydrologic systems and, thus, with the analysis of the behavior of a given system. The next four lectures—7 through 10—deal with synthesis rather than analysis. In them, the question of simulating the behavior of natural hydrologic systems is discussed.

The original lectures were built around more than 100 figures, which were included with the handout material for the course, and also projected during the lectures. In this publication, many of these figures have been incorporated into the text. The handout material also contained a number of problems and a large number of references for each lecture. These were not confined to what would have been directly necessary for a short, 2-week course. Rather

---

[1] Formerly, Professor and Head, Department of Civil Engineering, University College, Cork, Ireland (1958–70); since then, Professor and Head, Department of Civil Engineering, University College, Dublin.

they were chosen so that the participants could, after the completion of the course, go more deeply into any part of the subject which was of particular interest to them. These problems and references are included in this publication and appear at the end of each lecture. So as to facilitate further study of individual aspects of the subject, some important references have been repeated in the various lectures rather than cross-referenced from one lecture to another.

LECTURE 1: HYDROLOGIC SYSTEMS

The Systems Approach

What is a system?

Before starting to discuss hydrologic systems, it is well to be clear about what we mean in this context by a system. There are, of course, almost as many definitions of a system as there are books on the subject of systems analysis and systems synthesis. It is worthwhile to review a few of these definitions before arriving at a working definition which will serve our purpose.

The first definition by Stafford Beer (*6*)[2], an expert on management and cybernetics, merely defines a system as "Anything that consists of parts connected together." This includes the essence of what a system is. It is something that consists of parts; there are separate parts in it, and they are connected together in some way. Of course, this does not bring us very far because philosophers will tell us that everything which is created, everything which changes, consists of parts. While it is true to say that everything is a system, this does not help us very much to build up a consistent theory of hydrologic systems.

A second definition is that given by MacFarlane (*30*) in his book on "Engineering Systems Analysis" in which he defines a system as "An ordered arrangement of physical or abstract objects." Here, the notion of some sort of order enters the picture; the system is put together in accordance with some sort of plan. Also we have the idea that there are two types of systems—a physical or real system and an abstract one.

A third definition by Ackoff (*2*), who was a pioneer in operations research, states that a system is, "Any entity, conceptual or physical, which consists of interdependent parts." Again we get the idea that the system can be conceptual or physical and that the system consists of interdependent parts.

The fourth definition, by Drenick (*19*), stresses the manner of operation of a system rather than its structure: "A device which accepts one or more inputs and generates from them one or more outputs." This concept of a system, as that which links inputs and outputs, is common in the literature. Further definitions and descriptions of the systems approach in other disciplines are found in works by Bellman (*7*), Doebelin (*14*), Draper and others (*18*), Ellis and Ludwig (*21*), Koenig and Blackwell (*24*), Lee (*27*), Lynch and Truxal (*29*), Paynter (*37*), Stark (*43*) and Tustin (*44*).

Having considered a large number of definitions of a system, I decided to

[2] Italic numbers in parentheses refer to Literature Cited at the end of each lecture.

accept as adequate for the present purpose, the definition that, "A system is any structure, device, scheme, or procedure, real or abstract, that interrelates in a given time reference, an input, cause, or stimulus, of matter, energy, or information, and an output, effect, or response, of information, energy, or matter." This definition includes the concepts contained in the definitions given above. The emphasis is on the function of the system—that it interrelates, in some time reference, an input and an output. In mechanics, we tend to talk about inputs and outputs; physicists and philosophers often speak of causes and effects; workers in the biological sciences talk of stimuli and responses. These are merely alternative words for the same two concepts. Reference to an input does not restrict the concept to a single input. The input could consist of a whole group of inputs so that we would have an input vector rather than a input variable. In some cases, the input could be completely distributed in space and thus represented by a function of both space and time.

The definition refers to inputs (and outputs) as consisting of matter, energy, or information. In some systems, both the input and output would consist of material of some sort; in others, attention would be concentrated on the input and output of energy; while in other systems, the concern would be with the input and output of information. There is no need, however, for the input and the output to be alike. It is perfectly possible to have a system in which an input of matter will produce an output of information or vice versa. That there is no necessity for the natures of the input and output to be the same has been emphasized in the definition by using the reverse order to describe the natures of the input and the output. The essence of a system—which can be real or abstract—is that it interrelates two things.

Concept of system operation

In dealing with problems in applied science, our concern is to predict the output from the system we are interested in. Figure 1–1 shows the three elements that together determine what this output will be. In the classical approach, certain assumptions are made about the nature of the system and the physical laws governing its behavior; these are then combined with the input to predict the output. To apply this classical procedure, it is necessary to know the physical laws or to be able to make reasonable assumptions about them. It is also necessary to be able to describe the structure of the system and to specify the input. A distinction is made here between the nature of the system itself and the physical laws of its operation. The nature of the system refers only to its inherent structure, that is, to the nature of the components of the system and the way in which these components are connected.

In hydrology, as in many other areas, the classical approach tends to breakdown either because, on the one hand, the physical laws are impossible to determine or too complex to apply, or, on the other hand, the geometry of

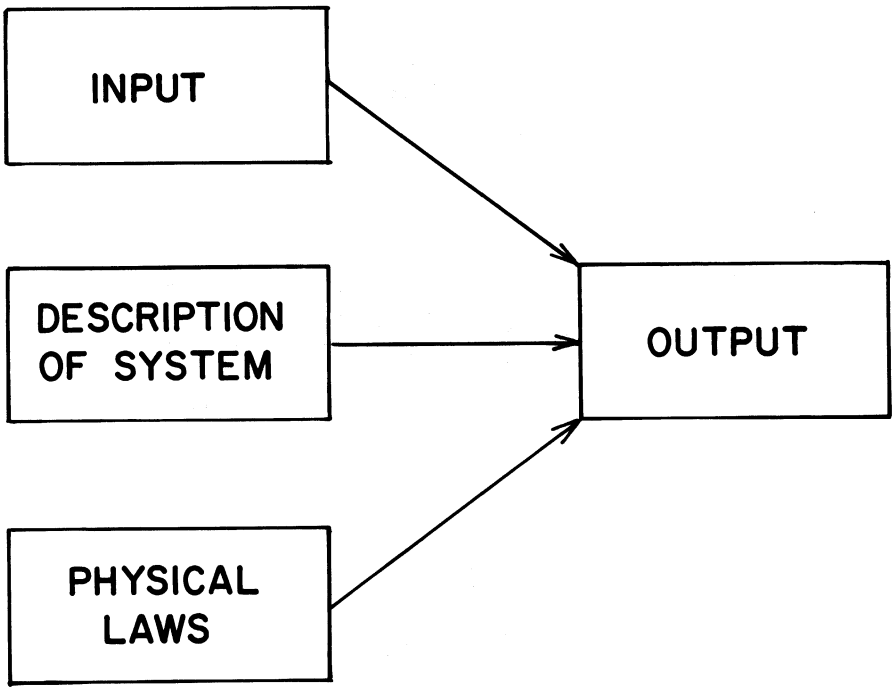

FIGURE 1–1.—Factors affecting output.

the system is too complex or the lack of homogeneity too great to enable us to apply classical methods to the prediction of the behavior of the system. In the systems approach, an attempt is made to evade the problems raised by the complexity of the physics, the complexity of the structure of the system, and the complexity of the input.

Figure 1–2 shows the essential nature of the systems approach to the problem. In figure 1–2, the elements of figure 1–1 are rearranged, and the concept of system operations is introduced. In the systems approach, the complexities arising from the physical laws involved and from the structure of the system being studied are combined into the single concept of the system operation of this particular system. If either the nature of the system or the physical laws are changed, then the systems operation will be changed. These effects are shown in the vertical relationships in figure 1–2. In dealing with one particular system, however, we can use this combined concept of system operation as being the element which accepts the input and converts it into an output.

Thus, in the systems approach, attention is concentrated on the horizontal relationship in figure 1–2. In systems analysis, we are concerned only with the way in which the system converts input to output. If we can describe this

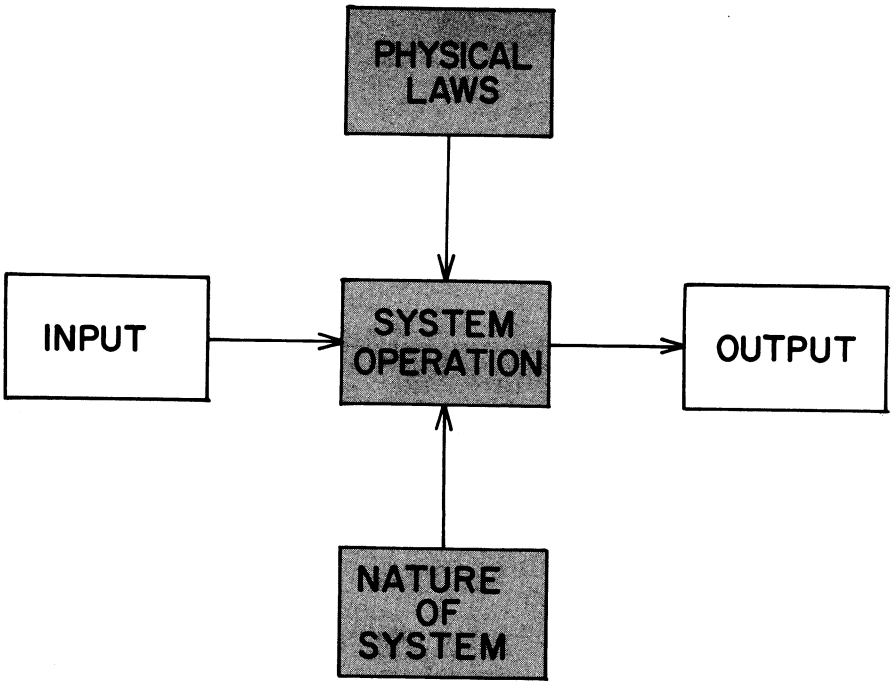

FIGURE 1–2.—The concept of system operation.

system operation, we are not concerned in any way with the nature of the system—with the components of that system, their connection with one another, or with the physical laws which are involved. The systems approach is an overall one and does not concern itself with details which may or may not be important and which, in any case, may not be known.

The concern of the systems approach with overall behavior rather than details can be exemplified by the unit hydrograph approach to predicting storm runoff. In this approach, precipitation excess is taken as the input and the direct storm runoff as the output. The operation of the whole watershed system in converting precipitation excess to direct storm runoff is summarized in the form of the unit hydrograph. We are not concerned with arguments about whether there is, or is not, such a thing as interflow, nor with arguments as to whether overland flow actually occurs; and if it does, what the friction factor is. We may overlook our ignorance of the physical laws actually determining the processes in various parts of the hydrologic cycle. We may ignore the problem of trying to describe the complex watershed with which we are dealing; we do not have to survey the whole watershed by taking cross sections on every stream as we would have to do if we wanted to solve the problems by classical hydraulics. Instead we assume that all the complex geometry in

the watershed and all the complex physics in the hydrologic cycle is described for that particular watershed (but of course for that one only) by the unit hydrograph. The systems approach is basically a generalization of this standard technique that has been used in applied hydrology for many years. The essential feature is that in dealing with the analysis of a particular system, attention is concentrated on the three horizontal elements in figure 1–2.

This does not mean that the structure of the system or the physical laws can be completely ignored. If our problem is one of synthesis or simulation, rather than analysis, it is necessary to consider the vertical elements in figure 1–2. Again we have an analogy with the unit hydrograph technique in applied hydrology. If we have no records of input and output (that is, of precipitation excess and of storm runoff) for a watershed, it is necessary to use synthetic unit hydrograph procedures. This is done in applied hydrology by correlating the parameters of the unit hydrograph with the catchment characteristics. In this way, the effect of the structure on the system operation is taken into account. Because the physics does not change from watershed to watershed, it might be thought that no assumptions are made about the physics of the problem in synthetic unit hydrograph procedures. This is not so. The whole unit hydrograph process of superimposing unit hydrographs and blocks of precipitation excess depends on the superposition principle, which will only apply, as we shall see later, if the system we are dealing with is linear. Therefore, unit hydrograph procedures make the fundamental assumption that the physical laws governing direct surface runoff can be represented as operating in some linear fashion.

In the above example, the details of the operation of a system were ignored because they were too complex to be understood. In other cases, the details are ignored because they are not important. Again we can take an example from classical hydrology. The problem of routing a flow through an open channel can be solved by writing down the equation of continuity and the dynamic equation and proceeding to solve the problem for the given data by the methods of open channel hydraulics. Even with large, high-speed computers, the solution for the case of a nonuniform channel is extremely difficult. The solution proceeds step-by-step down the reach and marches out step-by-step in time. In practice, the detailed results for the discharge and depth at every point along the channel are not required since all we usually wish to know is the hydrograph at the downstream end. Whether we use the method of characteristics, an explicit finite difference scheme, or an implicit finite difference scheme, difficulties of one sort or another arise in the numerical solution of this problem. Most of the information which we have gained with such labor is of little interest to us as applied hydrologists. More than 30 years ago, hydrologists dodged these difficulties by introducing the idea of hydrologic routing, that is, the idea of treating the whole reach as a unit, trying to link up the relationship between the upstream discharge and the downstream discharge without bothering with what went on in between.

Systems terminology

As in every other discipline, a terminology has grown up in systems analysis and systems engineering. The meaning of the more important concepts and terms must be clear before we can understand what is written in the literature concerning the systems approach.

A complex system may be divided into subsystems, each of which can be identified as having a distinct input-output linkage. A system or a subsystem may also be divided into components, each of which is an input-output element, which is not further subdivided for the purpose of the study in hand. Thus, a system is composed of subsystems, and the subsystems themselves consist of components.

Reference is frequently made to the state of a system. This is a very general concept. Any change in any variables of the system produces a change of state. If all of the state variables are completely known, then the state of the system is known. Perhaps it is easiest to look at this in hydrologic terms. If we knew exactly where all the water in a watershed was—how much of it was on the surface, how much of it in each soil horizon, and how much of it in each channel—we would know the hydrologic state of the watershed. The state of a system may be determined in various ways. In some systems, it is determined historically, that is, the previous history of the system determines its present condition. In other cases, the state of the system is determined by some external factor which has not been included in the system under examination. In still other cases, the state of the system is stochastically determined or else assumed to be stochastically determined, that is, determined by a random factor.

A system is said to have a zero memory, a finite memory, or an infinite memory. The memory is the length of time in the past over which the input affects the present state. If a system has a zero memory, then its state and its output depend only on the present input. If it has an infinite memory, the state and the output will depend on the whole past history of the system. In a system with a finite memory, its behavior, its state, and its output depend only on the history of the system for a previous length of time equal to the memory.

The distinction between linear and nonlinear is of vital importance in systems theory as it is in classical mechanics. The analysis and synthesis of linear systems can draw on the immense storehouse of linear mathematics for techniques. The special properties of linear systems will be dealt with in detail later. For the moment, it will suffice to say that a linear system is one that has the property of superposition and a nonlinear system is one that does not have this property.

Another important distinction is between time-variant and time-invariant systems. A time-invariant system is one whose input-output relationship does not depend on the time at which the input is applied. Most hydrologic systems

are actually time-variant; there are seasonal variations throughout the year and a variation of solar activity throughout the day. Nevertheless, the advantages of assuming the systems to be time-invariant is such that these real variations are usually neglected in practice.

It is necessary to distinguish between continuous and discrete systems, and also among continuous, discrete, and quantized systems. Whereas hydrologic systems are continuous, the inputs and outputs may be available in either continuous, discrete, or quantized form. A system is said to be continuous when the operation of the system takes place continuously. A system is said to be discrete when it changes its state at discrete intervals of time. An input or an output of a system is said to be continuous when the values of it are either known continuously or can be sampled so frequently as to provide a virtually continuous record. An input or an output is said to be discrete if the value is only known or can only be sampled at finite time intervals. An input or an output is said to be quantized when the value only changes at certain discrete intervals of time and holds a constant value between these intervals. Many records of rainfall, which are only known in terms of the volume during certain intervals of time, are in effect quantized records.

We can talk of the input and output variables and the parameters of the system as being either lumped or distributed. A lumped variable or parameter is one whose variation in space is either nonexistent or has been ignored. Thus, the average rainfall over a watershed, which is used as the input in many hydrologic studies, is a lumped input. Where the variation in one or more space dimensions is taken into account, the parameter is a distributed one. Either the parameters of a system itself or the inputs or outputs can be lumped. The behavior of lumped systems is governed by ordinary differential equations with time as the independent variable. The behavior of distributed systems is governed by partial differential equations.

A distinction is also made between deterministic and probabilistic systems. In a deterministic system, the same input will always produce the same output. The input to a deterministic system may be either itself deterministic or stochastic. A probabilistic system is one which contains one or more elements in which the relationship between input and output is statistical rather than deterministic. The present lectures are mainly concerned with deterministic systems.

The distinction is sometimes made between natural systems and devised systems. The essential feature of natural systems is that though the inputs and outputs and other state variables are measurable, they are not controllable. In a devised system, for example, an electronic system, the input may be both controllable and measurable.

Other descriptions of systems are that they are either simple or complex. Complex in this context usually means systems with feedback built into them. Some systems have negative feedbacks built into them to produce stability and others are designed for ultrastability, that is, to be stable even against

unanticipated changes in the external environment. Beyond feedback we have adaptive systems which learn from their past history and improve their performance.

A causal system is one in which an output cannot occur earlier than the corresponding input. In other words, the effects cannot precede the cause. In electrical engineering, the limitation to causal systems is sometimes abandoned to achieve certain results. All of the systems dealt with in hydrology are causal systems. Simulation systems are also referred to as being realizable. This has much the same meaning as causal insofar as it means that the system is nonanticipative in its operation.

A further important property of systems is their stability. A stable system is one in which if the input is bounded, then the output is similarly bounded. In hydrology, virtually all our systems are stable and extremely stable. In most cases, when the input to a hydrologic system is bounded, the bound on the output is considerably less than that on the input.

Basic problems involving systems

We have already seen that a system is essentially something which interrelates an input and an output. Thus, from an overall viewpoint there are three elements to be considered—the input, the system operation, and the output. This general relationship can be represented either by a rectangular box, in which the system H converts the input $x(t)$ into the output $y(t)$. Alternatively, it may be represented by the general mathematical relationship:

$$y(t) = h(t) \psi x(t) \tag{1}$$

where $h(t)$ is a mathematical function characterizing the system operation and ψ is a symbol denoting that the function $h(t)$ and the input function $x(t)$ are combined in some way to produce the output function $y(t)$. If the operation of the system can be described in any way, then we are concerned with the interrelation of three functions—the input function, the system operation function, and the output function.

If we have derived a mathematical representation of the operation of the system and we know the input, then the problem of finding the output is a problem of prediction. In terms of the unit hydrograph approach, the problem is to determine the storm runoff knowing the unit hydrograph and the given or assumed effective rainfall.

If, however, we do not know the unit hydrograph, it is necessary to derive it from the past records. This is the problem of finding a function describing the system operation knowing the input and output; it may be described as the problem of system identification. The problem of system identification is much more difficult than the problem of output prediction. It is important to realize what we mean by system identification. We cannot identify the system uniquely in the same way as we might identify someone from their fingerprints.

Rather can we identify the behavior of the system much the same way as a criminal might be identified by his modus operandi. All that system identification tells us is the overall nature of the systems operation and not any details of the nature of the system itself.

The various problems that can arise are shown on figure 1–3. If we have a given system, then the problem is one of analysis, as in the case of the structural engineer who is faced with the analysis of a given design. There are three elements in the system relationship; hence there are three types of problems in analysis with which we must concern ourselves. In each of these situations, the problem is to find one of the elements when given the other two.

The third problem of analysis is detection. This occurs when, knowing how our system operates and knowing the output, we wish to know what is the input. This is the problem of signal detection and the problem inherent in all instrumentation. In hydrology, as in many other fields of engineering, this particular problem has been widely ignored. The engineer has been too content to assume that his instruments are perfect, that is to assume that the input to an instrument is correctly given by the output recorded by the instrument. It is only in recent years that there has been any study of hydrologic instruments from a systems viewpoint. The problem of signal detection, or signal identification, is mathematically the same as the problem of system identification and, therefore, also substantially more difficult than the problem of output prediction.

The problem of prediction is that of working out the interrelationship of the two functions $h(t)$ and $x(t)$ shown on the right-hand side in equation 1. The

PROBLEMS ARISING WITH SYSTEMS

TYPE OF PROBLEM		INPUT	SYSTEM	OUTPUT
Analysis	Prediction	✓	✓	?
	Identification	✓	?	✓
	Identification	?	✓	✓
Synthesis (Simulation)		✓	??	✓

FIGURE 1–3.—Classification of systems problems.

problem of system identification or signal detection is that of unscrambling one of the components on the right-hand side of the equation. This involves a problem of inversion, which is inherently difficult.

Besides the problems of analysis, we have also the problems of synthesis. This corresponds to the problem of the structural engineer who has to design a structure as well as know how to analyze it. In hydrology, we do not design watersheds, except possibly in urban hydrology, but even here we do not design them from a hydrologic viewpoint. We do, however, attempt to simulate complex hydrologic systems by simpler models, and this is essentially a problem of synthesis. The problem of synthesis is to devise a system which will convert a known input to a known output within certain limits of accuracy. It involves the selection of a model and the testing of the operation of this model by analysis. This is even more difficult than the problem of identification, and hence the double question mark in figure 1–3.

A scientific approach to the analysis and synthesis of systems must rest on a firm mathematical foundation. In the following lectures, the mathematical techniques used at present in parametric hydrology are introduced and their application described. Those interested in studying more deeply the mathematics of system behavior can do so in books by Aseltine (*5*), Zadeh and deSoer (*46*), DeRusso and others (*13*), Gupta (*23*), and Wymore (*45*).

Hydrologic systems

Although we have already referred to certain isolated problems in hydrology, it is well to consider the hydrologic cycle as a whole before considering the various hydrologic subsystems. Figure 1–4 shows a diagram of the hydrologic cycle by Ackerman and others (*1*).

Similar diagrams can be found in any standard textbook. These diagrams can be compared for such qualities as artistic merit and draftsmanship, but what do they mean from a systems point of view? Those who use the systems approach are known to have an aversion to such diagrams and to insist on drawing everything in terms of neat rectangles. These austere rectangular boxes do not even have the color of modern abstract art to save them from criticism. From their appearance one would deduce that they show much less information than the figures such as that shown in figure 1–4. Actually, this is not so. Figure 1–5 is a systems representation or block diagram of the hydrologic cycle and is based on figure 1–4. Actually there are less assumptions in the block diagram of figure 1–5 than in the representation in figure 1–4.

The whole hydrologic cycle is a closed system in the sense that the water circulating in the system always remains within the system. The whole system is driven by the excess of incoming radiation over outgoing radiation, and the movement of water through the hydrologic cycle is only possible because of this source of energy. In figure 1–5, the system represented by the hydrologic cycle has been divided into subsystems. Thus we have the atmospheric sub-

system, the subsystem represented by the surface of the ground, the subsurface subsystem or unsaturated phase, the ground water subsystem or saturated phase, the channel network subsystem, and the ocean subsystem. Each of these subsystems will contain individual components, but for the purpose of an overall analysis and overall discussion, these components have all been lumped into one subsystem. The hydrologic cycle shown in figure 1–5 is a system in which the inputs and outputs are material. Water in one of its

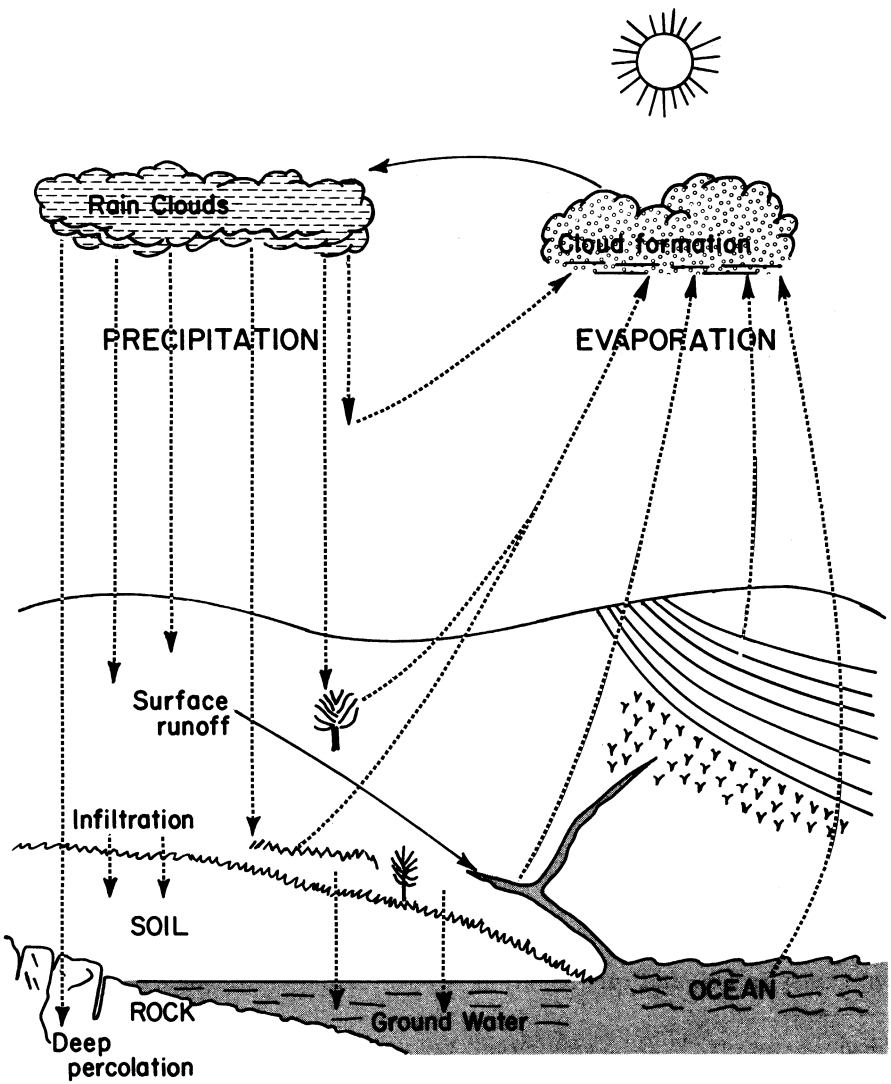

FIG. 1–4.—Representation of the hydrologic cycle.

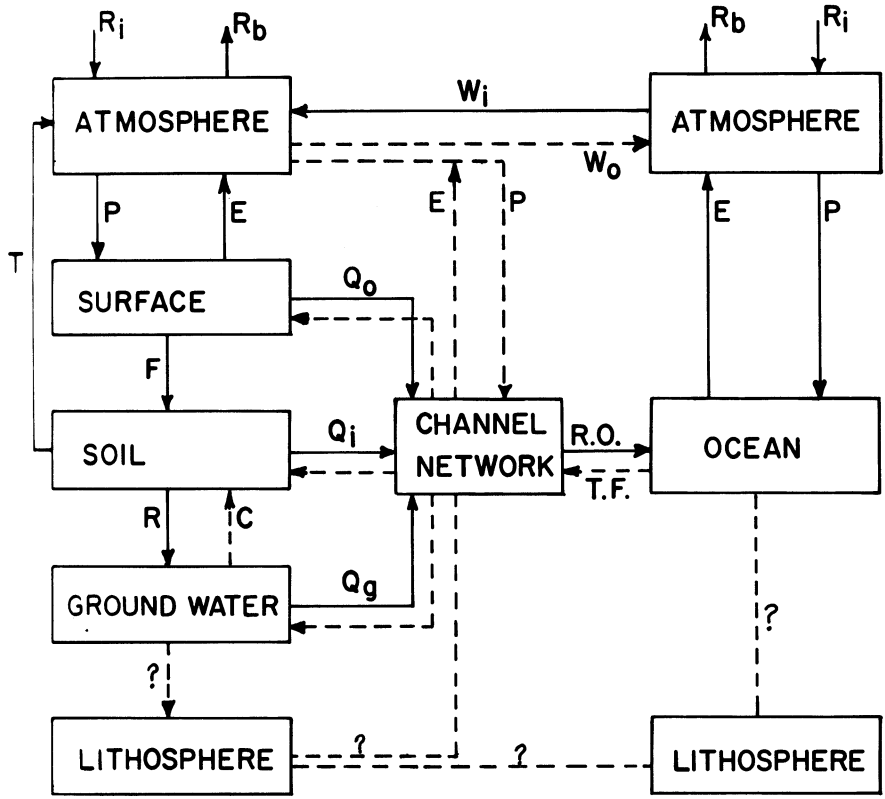

FIGURE 1–5.—Block diagram of the hydrologic cycle.

phases either moves through the cycle or is stored in some part of the cycle at all times. Figure 1–6 shows a representation of the hydrologic cycle developed by Kulandaiswamy.[3] The latter figure is similar to the systems representation used by electrical engineers.

Neither classical hydrology nor systems hydrology deals with the hydrologic cycle as a whole. Hydrology leaves the atmosphere to the meteorologists, the lithosphere to the geologists, and the seas to the oceanographer. The resulting subsystem is shown in figure 1–7. In outlining this subsystem we have cut across certain lines of water transport and, consequently, the system is no longer a closed one. These lines of water transport—precipitation, evaporation, transpiration, and runoff—are now either inputs or outputs to our new

[3] KULANDAISWAMY, V. C. A BASIC STUDY OF THE RAINFALL EXCESS-SURFACE RUNOFF RELATIONSHIP IN A BASIN SYSTEM. Ph.D. thesis, Univ. of Illinois. 1964 [Available as Publication No. 64-12535.] from University Microfilms, Inc. P.O. Box 1346, Ann Arbor, Mich. 48106

system. Whereas precipitation is clearly an input and runoff an output, it is not always easy to decide whether evaporation and transpiration are inputs or outputs. One reasonable standpoint is to consider potential evaporation as an input and actual evaporation as an output.

The system shown in figure 1–7 is clearly a lumped system. But this does not involve any more assumptions than are made by classical hydrologists when they consider the individual basin, whether it be a parking lot, an experimental plot, or a natural watershed. These are all basins—they are all systems, which convert a certain hydrologic input into a hydrologic output. It is possible to divide up the system and subsystems shown in figure 1–7 into components. Thus, we could divide the soil into various layers, or divide the ground water into two ground water components, one of which is shallow and subject to transpiration, and the other of which is so deep that no ground water loss can occur through transpiration.

The distinction shown in figure 1–7 between overland flow, interflow, and ground water flow is not generally made in applied hydrology because it is virtually impossible to separate the three types. Instead, applied hydrologists distinguish between surface flow and base flow and use a model of the hydrologic cycle something like that shown in figure 1–8. The precipitation is divided into (1) precipitation excess and (2) infiltration and other losses. The precipitation excess produces direct storm runoff. The infiltration replenishes soil storage which is drawn down upon by transpiration. Any excess infiltration after soil moisture storage is satisfied forms recharge to ground water, which eventually emerges as base flow. The presence of the threshold in the soil storage phase of the system makes it impossible to treat the whole system as linear, even where the evaporation and transpiration are completely known. The development of the unit hydrograph theory as a linear relationship between precipitation excess and storm runoff avoided this difficulty by

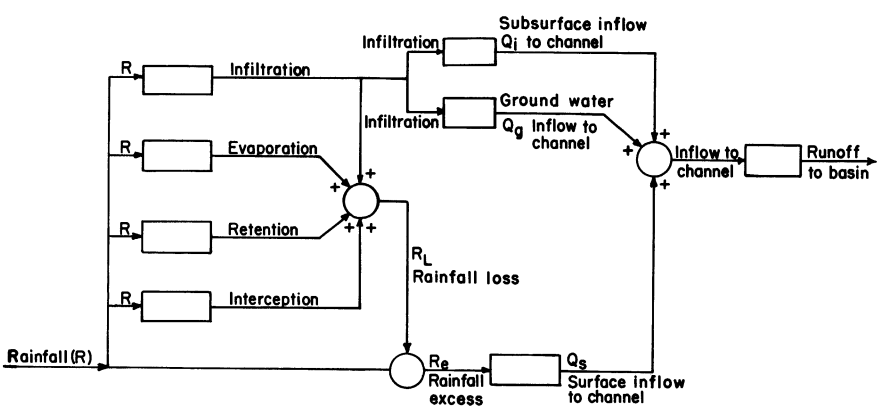

FIGURE 1–6.—Kulandaiswamy's block diagram.

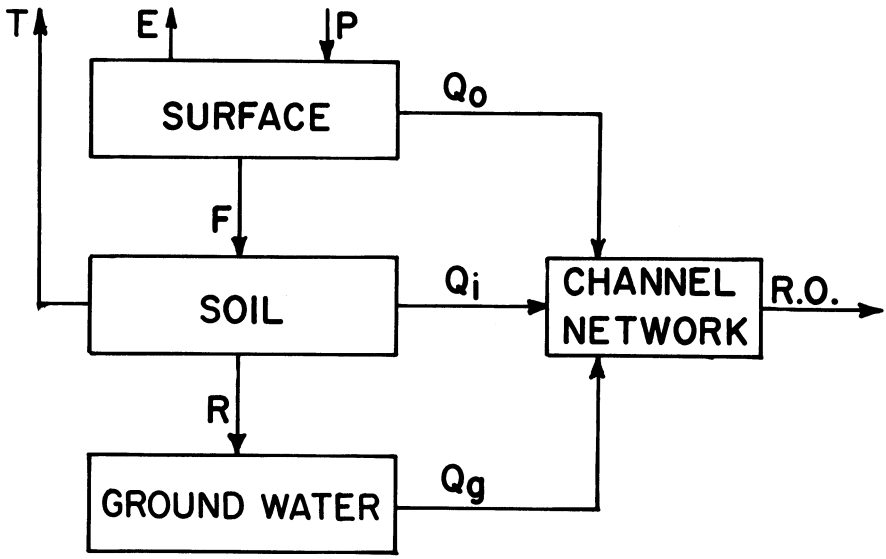

FIGURE 1–7.—The catchment as a system.

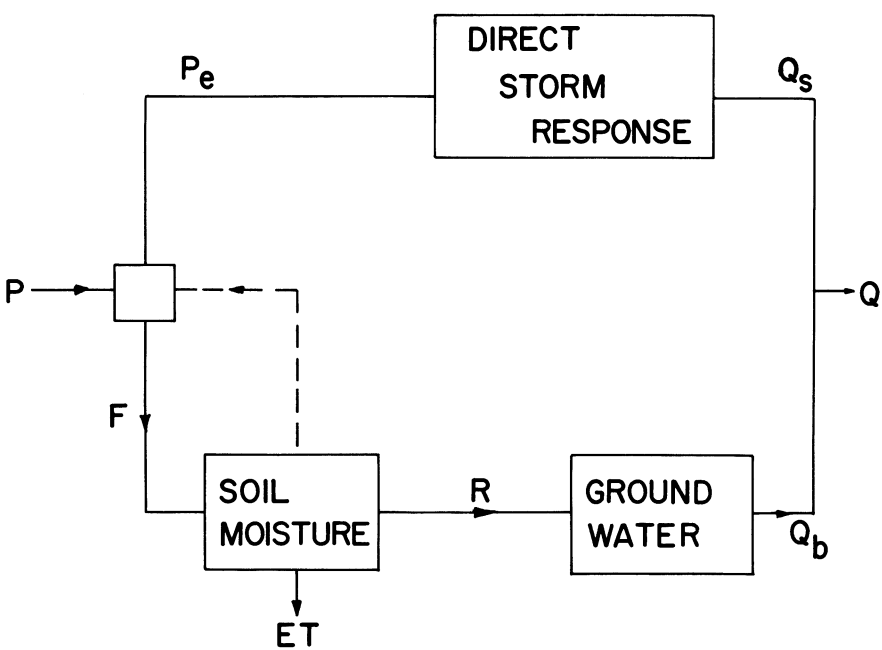

FIGURE 1–8.—The simplified catchment model.

the elimination of the base flow and the infiltration. It is the existence of this threshold—rather than the difference in response time between the surface response and the ground water response—that necessitates the separation.

In applied hydrology, the full model shown in figure 1–8 is not used. In practice, the base flow is separated from the total hydrograph in some arbitrary fashion, and the precipitation excess is then taken so as to be equal in value to the storm runoff. On the other hand, in soil moisture accounting the threshold effect inherent in soil moisture storage is taken into account. It is only recently that studies have taken both phases into account. Also, it is only recently that the systems techniques developed for surface water have been applied to the problems of ground water response, notably by Kraijenhoff van de Leur (*25*).

If we wish to consider the whole system shown in either figure 1–7 or figure 1–8, then we are of necessity dealing with a nonlinear system. This brings in all the difficulties of nonlinear mathematics. It is not surprising, therefore, that the concentration has been on the individual elements shown in figure 1–8. Over the past 35 years, unit hydrograph techniques have been developed for dealing with the direct response in runoff and these techniques are all based on the assumption of linear behavior. Similarly, drainage engineers dealing with the saturated zone have used linearized equations, though it was not until very recently that it was realized this would enable systems methods to be used without further loss of generality (*25*). The unsaturated phase involving soil moisture storage remains the most difficult part of the hydrologic cycle to handle. Not only does a threshold exist, but there is a feedback mechanism because the state of the soil moisture determines the amount of infiltration. It is in the unsaturated phase that the greatest difficulties will be encountered and that the greatest amount of work needs to be done.

The systems approach has been fruitful in many other disciplines. Such work as has been done on parts of the hydrologic cycle has been encouraging. There is every reason to believe that the application of the systems approach to the whole hydrologic cycle will produce a coherent theory of hydrologic systems, which can form the basis for an applied hydrology with a scientific basis. The development over the past 15 years can be followed in the references cited at the end of this lecture. General surveys of the problem from varying points of view have been given by Paynter (*36*), Amorocho and Hart (*3*), Kraijenhoff van de Leur (*26*), Nash (*33*), and Dooge (*17*).

Linear Time-Invariant Systems

The essence of linearity is the principle of superposition, which may be described as follows (an arrow signifies that a particular input to the system results in a particular output):

$$\text{If } x_1(t) \rightarrow y_1(t) \text{ and } x_2(t) \rightarrow y_2(t),$$

then the system is said to be linear if:

$$x_1(t)+x_2(t)\rightarrow y_1(t)+y_2(t)$$

This principle includes the principle of homogeneity in the special case in which $x_1=x_2$.

The principle of superposition, of course, is not confined to the addition of only two inputs. Any number of inputs can be added together as long as the principle holds; the output will be the sum of the individual corresponding outputs. Since integration is a limiting form of summation, if the input to the system can be expressed as the integral of any function $f(t)$, then the corresponding output can be obtained by integrating the output due to an input $f(t)$.

The system linearity defined by the principle of superposition must be distinguished from the existence of a general linear (that is, a straight line) functional relationship between input and output. It can easily be verified that if the input to a system is x and the output is $y=ax+b$, the system is not linear.

A system is said to be time-invariant when its parameters do not change with time. For such a system, the form of the output depends only on the form of the input and not on the time at which the input is applied. Thus, if

$$x(t)\rightarrow y(t)$$

then for a time-invariant system:

$$x(t+\tau)\rightarrow y(t+\tau)$$

where τ is a time shift which may be either positive or negative.

In hydrology, the assumptions of linearity and time-invariance are not valid, but nevertheless have been used for a long time in applied hydrology because of the simplification they introduce. The ability to predict the output from a hydrologic system is based on past records of input and output. By the assumption of time-invariance, it is possible to predict an output for a given input if that particular input has already occurred at some time during the period of record. Without the assumption of time-invariance this would not be possible. The further assumption of linearity allows the prediction to be made even though the shape of input in which we are interested has not occurred in the past. This is done by (1) breaking down the past input and the input being considered into basic elements of standard shape but varying volume, (2) decomposing the past output so as to obtain the output due to a characteristic input element of standard volume, (3) using the latter result to predict the output due to the individual characteristic elements of the input being considered, and (4) superimposing the outputs from these individual characteristic elements to obtain the total output. This is the basis of the unit hydrograph procedure, which deals with the storm runoff for a unit period.

The problems of systems analysis and synthesis are also greatly simplified if the input and output of a system are assumed to be lumped. In a lumped system with a single input and a single output, the behavior of the system would be governed by an ordinary differential equation. For the system with several inputs and several outputs, the behavior of the system would be described by a set of differential equations. If the inputs and outputs are not lumped, then the system behavior must be described by partial differential equations. Since partial differential equations are much more difficult to handle than ordinary differential equations, there are distinct advantages in using lumped inputs and outputs in the first attempt to formulate a theory of system behavior.

The assumptions of linearity and time-invariance are also reflected in the type of differential equations which would describe the behavior of the system. Thus a lumped linear system would correspond to an ordinary linear differential equation. If the system were also time-invariant, then the differential equation would be an ordinary differential equation with constant coefficients. The fact that ordinary differential equations with constant coefficients are far easier to handle than any other type indicates the advantages of making the assumptions of lumping linearity and time-invariance in the handling of system operations.

The assumption of linearity helps us greatly with the problem of predirection. If a complex input can be described in terms of a set of simple characteristic functions and the output corresponding to each of these characteristic functions is known, then the output due to the complex input can be obtained by superposition. This question has been well discussed by Sievert (*40*). It is, of course, possible to expand an arbitrary function in a great variety of ways. Thus, we could expand the function in terms of a power series:

$$x(t) = c_0 + c_1 t + c_2 t^2 + \ldots\ldots \tag{2}$$

or in terms of an exponential series:

$$x(t) = c_0 + c_1 e^{-t} + c_2 e^{-2t} + \ldots\ldots \tag{3}$$

The trouble with such series is that in the case of a function which is given numerically, it is difficult to determine the values of the coefficients in the expansion with good accuracy. If, however, we expand $x(t)$ in terms of a set of functions $f_i(t)$:

$$x(t) = c_0 f_0(t) + c_1 f_1(t) + c_2 f_2(t) + \ldots\ldots \tag{4}$$

where the functions $f_i(t)$ are orthogonal (see "Orthogonal Polynomials and Functions," lecture 3) then the property of orthogonality can be used to find the coefficients c_i relatively easily and with good accuracy.

In choosing between the orthogonal functions available it is, of course, convenient if the orthogonal series used to fit a given $x(t)$ is as short as

possible. Consequently, one set of orthogonal functions may be preferable to another set because of the nature of the input. If the input is expanded in terms of a set of orthogonal functions $f_i(t)$ in accordance with equation 4 and the output corresponding to each of these orthogonal functions is given by:

$$f_i(t) \rightarrow g_i(t) \tag{5}$$

then the output from the system due to the input $x(t)$ is given by:

$$y(t) = c_0 g_0(t) + c_1 g_1(t) + c_2 g_2(t) + \ldots\ldots \tag{6}$$

where the values of the respective coefficients in equations 4 and 6 are equal. It is also convenient if the output corresponding to the typical orthogonal function is simple in form. Thus, the choice of a convenient set of orthogonal functions for representing the input, output, and response function depends both on the nature of the input and the nature of the system.

Electrical engineers deal with lightly damped systems in which the inputs are usually sinusoidal. Consequently, Fourier methods of analysis are of great utility in electrical engineering, since the sine and cosine functions are orthogonal to one another and are of the same general form as the inputs and outputs. Consequently, the Fourier methods were the first to be developed in systems analysis. The various developments of Fourier methods—the Fourier *integral* for dealing with transients and the *Laplace transform* for dealing with unstable systems—are natural developments. These well-established techniques can be found in standard texts such as Gardner and Barnes (*22*).

In hydrology, however, the systems are not lightly damped and the responses are not oscillatory in nature. Instead, we have systems that are very heavily damped. It would, therefore, be foolish to take over from the electrical engineer the techniques he has developed for his particular problems without close examination of their relevance to hydrologic systems.

Continuous forms of the convolution equation

The derivation of the fundamental equation for system operation of a linear system depends on the use of the concepts of an impulse function and the impulse response. The impulse function—or Dirac delta function—is really a pseudofunction or distribution which is usually defined as having the properties:

$$\delta(t-t_0) = 0, \quad \text{when} \quad t \neq t_0 \tag{7}$$

$$\int_{-\infty}^{\infty} \delta(t-t_0)\, dt = 1 \tag{8}$$

The delta function is usually visualized as the limiting form of a pulse of some particular shape as the duration of the pulse goes to zero. The more correct

mathematical definition of the delta function:

$$x(t) = \int_{-\infty}^{\infty} \delta(t-\tau)x(\tau)\, d\tau \tag{9}$$

is actually more directly useful for our purpose here. Siebert (*40*) has pointed out that equation 9 is a special limiting form of equation 4, in which $f_i(t)$ is replaced by the orthogonal delta function $\delta(t-\tau_i)$ and the orthogonal coefficients c_i are given by $x(\tau_i)$.

The impulse response of a system, $h(t)$, is defined as the output from the system when the input takes the form of an impulse or delta function, that is, if $x(t)=\delta(t)$, then $y(t)=h(t)$. If the system is linear, the impulse response gives as complete a description of the system behavior as is needed. In surface water hydrology, the IUH is the impulse response of the catchment.

The two concepts given above can be used to derive a convenient mathematical formulation of system operation for a lumped linear time-invariant system. If the impulse response of the system is $h(t)$, then we have:

$$\delta(t) \rightarrow h(t)$$

For a time-invariant system

$$\delta(t-\tau) \rightarrow h(t-\tau)$$

For a linear system

$$x(\tau)\,(t-\tau) \rightarrow x(\tau)h(t-\tau)$$

Any arbitrary input $x(t)$ can be considered as being made up from an infinite number of delta functions as indicated by equation 9 above. Since the operation of integration is linear, the output from such an input $x(t)$ will be given by integrating the weighted output $x(\tau)h(t-\tau)$ corresponding to the individual delta functions $\delta(t-\tau)$:

$$x(t) \rightarrow \int_{-\infty}^{\infty} h(t-\tau)x(\tau)\, d\tau \tag{10}$$

Thus for an input $x(t)$ and an output $y(t)$, we have the relationship:

$$y(t) = \int_{-\infty}^{\infty} h(t-\tau)x(\tau)\, d\tau \tag{11a}$$

The right-hand side of this equation represents the well-known mathematical operation of convolution, which is often represented by an asterisk so that we can write:

$$y(t) = h(t)*x(t) \tag{11b}$$

Thus, the completely general relationship indicated in equation 1 has been replaced by the definite convolution relationship represented by equation 11 for a lumped linear time-invariant system. As long as we confine our attention to such systems, we will be concerned with the solution of equation 11. The

problem of prediction now becomes the solution of equation 11 for known values of $x(t)$ and $h(t)$ and, hence, represents only the operations of multiplication and summation which are inherent in convolution.

The twin problems of system identification—the determination of $h(t)$—and of signal identification—the determination of $x(t)$—are now seen to involve the solution of an integral equation which is, of necessity, a much more difficult mathematical problem than that of convoluting two known functions. The problem of synthesis is now seen to be that of devising a simulation system whose impulse response will, to a sufficient degree of approximation, represent the function $h(t)$ which is required. The impulse response in equation 11 is the IUH used in hydrology. In other disciplines, it is variously referred to as an impulse response or a characteristic response or a weighting function; in mathematics it is referred to as a *kernel function*, a *Green's function*, or an *influence function*.

Though we are largely concerned with lumped linear time-invariant systems, it is instructive to consider briefly the more general forms of the mathematical relationship between input and output when these assumptions are relaxed. If instead of a single input, we had a number of lumped inputs, then the relationship would be as follows:

$$y(t) = \sum_{i=1}^{n} \int_{-\infty}^{\infty} x_i(\tau) h_i(t-\tau)\, d\tau \tag{12}$$

An equation of the above type would apply to the case where the rainfall was measured at several points in the catchment and the values of $x_i(t)$ represented the individual rainfall records. In such a case, $h_i(t)$ would represent the contribution from the portion of the catchment area corresponding to the ith rain gage to the flow not at the outlet from that subcatchment but at the outlet from the whole catchment. The solution of the identification problem in this case would involve the solution of a set of simultaneous integral equations. If the rainfall were taken as completely distributed over the catchment area, then the equation for the outflow at the end of the area would be given by:

$$y(t) = \int_{0}^{a} \int_{-\infty}^{\infty} x(\tau,\alpha) h(t-\tau, a-\alpha)\, d\tau\, d\alpha \tag{13}$$

In a system which has a lumped input and is linear but time varying, then the impulse response $h(t,\tau)$ is a function of both the elapsed time t and the time τ at which the impulse of input is applied to the system. Thus we have the relationships:

$$\delta(t) \rightarrow h(t,0)$$

$$\delta(t-\tau) \rightarrow h(t,\tau)$$

$$x(\tau)\delta(t-\tau) \rightarrow x(\tau)h(t,\tau)$$

Using the property of linearity, we would have for an input $x(t)$, the output given by:

$$x(t) \rightarrow \int_{-\infty}^{\infty} x(\tau)h(t,\tau)\, d\tau \tag{14}$$

so that the system operation is defined by:

$$y(t) = \int_{-\infty}^{\infty} x(\tau)h(t,\tau)\, d\tau \tag{15}$$

Since equations 11, 12, 13, and 15 are superposition integrals, they apply only to linear systems. There is no corresponding general formulas for the case where the system is nonlinear, but special formulas can be developed when the system is assumed to belong to a particular class of nonlinear systems.

If we make the assumptions of lumped inputs and outputs, linearity, and time-invariance, we have the general superposition integral given by equation 11a. Since in this equation, τ is a dummy variable of integration, we can replace it by $t-\tau$ in which case the superposition integral becomes:

$$y(t) = \int_{-\infty}^{\infty} h(\tau)x(t-\tau)\, d\tau \tag{11c}$$

Equations 11a and 11c are equally valid formulations of the relationship among the input, the system operation, and the output.

The limits of the superposition integral can be modified if we make the further assumption that the systems being considered are causal, that is, that the output cannot occur before the input. Since the impulse response $h(t)$ is the response to a delta function at time $t=0$, the impulse response function will be zero for a negative argument. Thus for causal systems, equation 11a can be written as:

$$y(t) = \int_{-\infty}^{t} x(\tau)h(t-\tau)\, d\tau \tag{16a}$$

and equation 11c can be written as:

$$y(t) = \int_{0}^{\infty} h(\tau)x(t-\tau)\, d\tau \tag{16b}$$

If the system has a finite memory, or if the input has existed for only a finite time, then the limits will be further modified. If the length of the memory is n, then the impulse response will be zero for arguments greater than n and equation 16a may be modified to read:

$$y(t) = \int_{t-n}^{t} x(\tau)h(t-\tau)\, d\tau \tag{17a}$$

and equation 16b will be modified to read:

$$y(t) = \int_0^n h(\tau)x(t-\tau)\ d\tau \tag{17b}$$

The equations given above will hold for the case where the input has occurred for an infinite time in the past. For an isolated input, it is convenient to take the time zero at the start of input. In this case, the value of the input $x(t)$ will be zero for negative argument. For an isolated input to a system with infinite memory, equation 16a will be modified to:

$$y(t) = \int_0^t x(\tau)h(t-\tau)\ d\tau \tag{18a}$$

and equation 16b to:

$$y(t) = \int_0^t h(\tau)x(t-\tau)\ d\tau \tag{18b}$$

For an isolated input to a system with finite memory the limits of integration in equation 17 will also be modified so that the range of integration will not exceed t, but in practice, it is more convenient in this case to retain the limits and record the zero values. Equation 18 is the normal form of the convolution equation which is dealt with in parametric hydrology. Except in special circumstances, which will be noted, it is the form used in the present lectures.

Classical systems analysis as developed by electrical engineers has grown up around frequency analysis, which is essentially the analysis of periodic phenomena. Care must be taken if these techniques are to be used in the analysis of hydrologic systems. Such techniques can only be used if the system under review has a finite memory. In such a case, if the input is of length M and the memory of length N, then the length of the output will be P where:

$$P = M + N$$

In hydrologic terms, M is the duration of rainfall excess; N is the base length of the IUH, and P is the duration of surface runoff. Since, in the case of a single storm event, everything that we are interested in is contained between zero time and P, we could assume the whole phenomena as periodic with a period T, provided that T is equal to or greater than P. This would mean that both the input and the output would be assumed to be repeated at the chosen interval T. Since these would be repeated inputs and not isolated inputs, we would not be entitled to set the limits of the convolution integral at zero and t as in equation 18. If the memory were finite and equal to N,

the convolution equation would then become:

$$y(t \pm kT) = \int_{t-N}^{t} x(\tau \pm kT) h(t-\tau)\, d\tau \tag{19a}$$

$$y(t \pm kT) = \int_{0}^{N} x(t-\tau \mp kT) h(\tau)\, d\tau \tag{19b}$$

where

$$x(t \pm kT) = 0 \quad \text{for} \quad M < t < T \tag{19c}$$

and

$$T \geq P = M + N \tag{19d}$$

Discrete forms of convolution equation

The form of the convolution equation given above as equation 18 is for the case where both the input and the output are continuously defined. If either the input or the output is given in quantized or discrete form rather than continuous form, the convolution equation must be modified accordingly.

In the classical unit hydrograph procedures, the rainfall is frequently given as a histogram, that is, in quantized form. In such a case, we deal not with an IUH, but with the finite period unit hydrograph introduced in 1932 by Sherman (*39*). A histogram input with an interval D can be defined either in terms of the histogram ordinates $x(t)$, where t is the actual time elapsed, or in terms of the histogram areas $X(\sigma D)$, where σ is the number of intervals elapsed before the beginning of the interval in question. The latter is more convenient and is used below. The histogram of input can be expressed in terms of the volumes of input $X(\sigma D)$ in successive standard periods as follows:

$$x(t) = \sum_{\sigma=-\infty}^{\infty} x(\sigma D) P_D(t-\sigma D) \tag{20}$$

where

$$P_D(t-\sigma D) = \frac{1}{D} \quad \text{for} \quad \sigma D < t < (\sigma+1) D \tag{21a}$$

and

$$P_D(t-\sigma D) = 0 \quad \text{for other values of } t \tag{21b}$$

Equation 21 is in effect the equation for a rectangular pulse of duration D and unit volume. Note that the volume of such a pulse is D and not unity.

Having replaced the delta function by the square pulse, we now replace the impulse response $h(t)$ by the pulse response $h_D(t)$ which is defined as being the output from the system when the input is given by the rectangular pulse defined in equation 21. Thus, we have:

$$P_D(t) \rightarrow h_D(t)$$

For a time-invariant system:

$$P_D(t-\sigma D) \rightarrow h_D(t-\sigma D)$$

For a linear system:

$$X(\sigma D) \cdot h_D(t-\sigma D) \rightarrow X(\sigma D) \cdot h_D(t-\sigma D)$$

Since summation is a linear process, we can write the output due to the input defined by equation 21 as:

$$X(t) \rightarrow \sum_{\sigma=-\infty}^{\sigma=+\infty} X(\sigma D) h_D(t-\sigma D) \tag{22}$$

so that the relationship between input and output for the system is given:

$$y(t) = \sum_{\sigma=-\infty}^{\infty} X(\sigma D) h_D(t-\sigma D) \tag{23a}$$

which corresponds to equation 11a for continuous input. As in equation 11c, this equation can be written in the alternative form:

$$y(t) = \sum_{\sigma=-\infty}^{\infty} X(t-\sigma D) h_D(\sigma D) \tag{23b}$$

As in the continuous case, the limits of summation will be affected by the further assumptions of causality, finite memory, or zero input for zero time. In particular, for a causal system with an infinite memory, we have for isolated input:

$$y(t) = \sum_{\sigma D=0}^{\sigma D=t} X(\sigma D) h_D(t-\sigma D) \tag{24a}$$

$$y(t) = \sum_{\sigma D=0}^{\sigma D=t} X(t-\sigma D) h_D(\sigma D) \tag{24b}$$

Equation 24 is the convolution equation for a finite period unit hydrograph. Both the unit hydrograph and the output are defined continuously even though the input is defined in quantized form being constant over each interval of length D.

In some of the early unit hydrograph work, both the input of rainfall excess and the output of storm runoff were represented by volumes over a fixed interval. The convolution equation for this case would be:

$$Y(sD) = \sum_{\sigma=0}^{\sigma=s} X(\sigma D) d_D(sD-\sigma D) \tag{25}$$

where both s and σ are discrete variables and d_D is the distribution graph for the interval length D for the particular catchment. The distribution graph d_D represents the proportion of the inflow during a standard interval which runs off in successive standard intervals.

In some cases, the input and output are only sampled and, thus, are only available in the form of functions known at discrete moments of time. In this case, the convolution equation would take the form:

$$y(sD) = \sum_{\sigma=-\infty}^{\infty} X(\sigma D)h_D(sD-\sigma D) \tag{26a}$$

which can be written without ambiguity as:

$$y(s) = \sum_{\sigma=-\infty}^{\infty} X(\sigma)h_D(s-\sigma) \tag{26b}$$

Here again both s and σ are discrete variables and h_D is the finite period unit hydrograph. For a causal system with an isolated input this, of course, can be written as:

$$y(sD) = \sum_{\sigma=0}^{\sigma=s} X(\sigma D)h_D(sD-\sigma D) \tag{27a}$$

or

$$y(s) = \sum_{\sigma=0}^{\sigma=s} X(\sigma)h_D(s-\sigma) \tag{27b}$$

where $y(s)$, $X(\sigma)$, and $h_D(s-\sigma)$ represent the ordinates of the output, the input, and the finite period unit hydrograph, respectively, at standard intervals D.

Equation 27 can also be written in the alternative form:

$$y_i = \sum_{j=0}^{j=i} x_j h_{i-j} \tag{28a}$$

$$y_i = \sum_{j=0}^{j=i} x_{i-j} h_j \tag{28b}$$

In the above equation, x has been used to represent the volumes of input which appear as X in equation 27. This is done in the interest of simplifying matrix equations which are developed later.

When written out in full, equation 28b has the familiar form given in textbooks on classical hydrology which is given below for an input lasting for five

units of time and a system memory length of three units of time:

$$y_0 = h_0 x_0 \tag{29a}$$

$$y_1 = h_1 x_0 + h_0 x_1 \tag{29b}$$

$$y_2 = h_2 x_0 + h_1 x_1 + h_0 x_2 \tag{29c}$$

$$y_3 = h_3 x_0 + h_2 x_1 + h_1 x_2 + h_0 x_3 \tag{29d}$$

$$y_4 = h_3 x_1 + h_2 x_2 + h_1 x_3 + h_0 x_4 \tag{29e}$$

$$y_5 = h_3 x_2 + h_2 x_3 + h_1 x_4 \tag{29f}$$

$$y_6 = h_3 x_3 + h_3 x_4 \tag{29g}$$

$$y_7 = h_3 x_4 \tag{29h}$$

The above set of simultaneous equations can be written in the matrix form:

$$\{y\}_{p+1,1} = [X]_{p+1,n+1} \{h\}_{n+1,1} \tag{30}$$

Where the matrix of inputs which has $p+1$ rows and $n+1$ columns is given below:

$$\begin{bmatrix} x_0 & 0 & 0 & & & 0 \\ x_1 & x_0 & 0 & & & \\ x_m & & & & & \\ 0 & x_m & x_{m-1} & \cdots & x_1 x_0 & \\ & & & & & 0 \\ & & & & & x_0 \\ & & & & & x_i \\ 0 & & & & 0 & x_m \end{bmatrix}_{p+1,\, n+1} \tag{31}$$

An alternative matrix formulation of the discrete case is:

$$\{y\}_{p+1,1} = [H]_{p+1,m+1} \{x\}_{m+1,1} \tag{32}$$

where the H matrix is made up from the h vector in the same way as matrix 31 and has $p+1$ rows and $m+1$ columns.

Equations 27, 28, 29, and 30 are merely alternative ways of formulating the relationship between the volume of input and the rate of output. Where the input is defined strictly as a discrete function, it is necessary to adjust the equations. Thus equation 27b for the relation between input volume and

output rate would be replaced by:

$$y(s) = \sum_{\sigma=0}^{\sigma=s} x(\sigma) h_D(s-\sigma) D \tag{33}$$

Note that as D approaches zero, equation 33 approaches the form of the continuous convolution equation 11a.

Identification and Simulation

Classical unit hydrograph methods

The problem of identification is the characterization of the system response from a given record of input and output. In hydrologic terms, the problem is to derive the unit hydrograph from a given record of precipitation excess and storm runoff. The classical method of solving this problem was by trial and error. Though it has nothing of the systems approach about it, this method has been illustrated in a systems fashion in figure 1–9. In the classical approach, some form of the unit hydrograph, that is, the impulse response, or pulse response, is assumed and applied to the given rainfall excess. The prediction of the output for this assumed unit hydrograph is merely a matter of simple multiplication and addition. The output based on the assumed unit hydrograph is then compared with the actual output and a decision made as to whether the fit is close enough.

If the fit is judged to be sufficiently close, then the assumed unit hydrograph is accepted. Otherwise, the assumed unit hydrograph is modified and the procedure repeated until an exception fit is found.

While the above procedure may be acceptable as an ad hoc method of getting a specific answer to one particular problem, it cannot be accepted as deserving of the name of scientific hydrology unless both the criterion of acceptable fit and the rule for modifying the trial unit hydrograph are objectively defined. The technique of optimization by eye has been widely used,

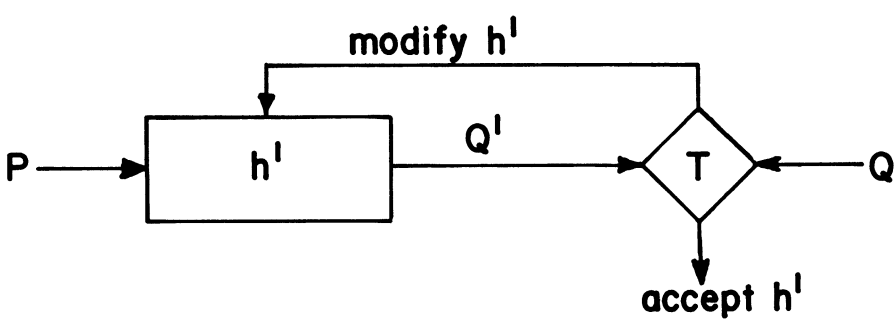

FIGURE 1–9.—Identification by trial and error.

not only in unit hydrograph studies but also in many other branches of hydrology. The supposedly learned journals on scientific hydrology abound with papers in which two curves are said to be a sufficiently accurate approximation of one another or in which a curve is said to represent some plotted data to a reasonable degree of accuracy. In a rational science, it should be possible for a second worker to use another scientist's data and reach exactly the same conclusion. The systems approach in hydrology attempts to achieve this latter objectivity instead of the subjectivity inherent in many of the methods in use today.

Figure 1–10 is a systems representation of the Collins (*10*) method of deriving the unit hydrograph. This is an iterative method and one which is a distinct improvement on the trial-and-error approach. In Collins' method the assumed unit hydrograph is not applied to the whole precipitation excess record, but only to all the rainfall volumes other than the maximum. The resulting estimated runoff, therefore, represents the runoff due to rainfall in all periods except the period of maximum rainfall. When this estimate is subtracted from the actual runoff, the difference gives an estimate of the runoff due to the rainfall in the unit period of maximum precipitation excess. When divided by the appropriate volume of precipitation excess in the period, this runoff due to maximum rainfall gives a new estimate of the unit hydrograph, and the whole process is then repeated. Except for unusual conditions, the iterative procedure is convergent. If the unit hydrograph is constrained to be causal, that is, to have zero ordinates for negative time, then the effect of the Collins' procedure is to concentrate any error in the matching of the runoff hydrograph into the portion of that hydrograph due to rainfall before the period of maximum rainfall.

Transform methods of system identification

Parametric hydrology has concerned itself with the development of such objective methods as the impulse response or the rectangular pulse response for determining the unit hydrograph. These methods will be discussed in

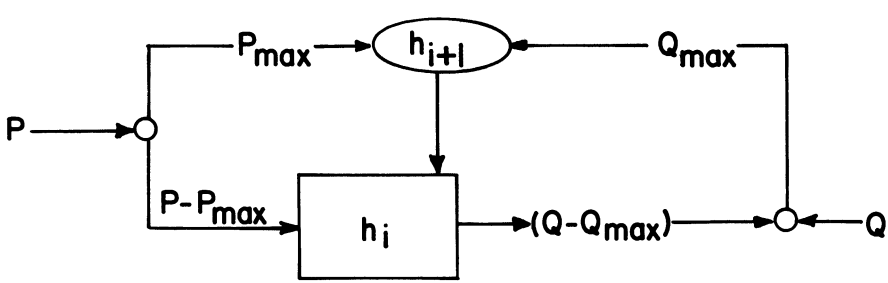

FIGURE 1–10.—Identification by iteration (Collins' method).

detail in later lectures, but a brief preview is in order at this point. The methods used can be grouped into two general classes, one of which may be referred to as *transform methods* and the second as *correlation methods.*

Figure 1–11 shows the general approach of the transform methods to the problem. In these methods, the known input and the known output are transformed in some fashion. These transformed inputs and transformed outputs are then used to determine the transform of the impulse response or the rectangular pulse response. If the transformed response can be inverted, the actual impulse response or pulse response will then be known in the original time domain. A complete transform method of identification therefore, contains three elements: (1) The transformation of the input and the output; (2) the use of a linkage equation, which defines the transform of the system response in terms of the transform of the input and the output; and (3) an inversion of the transformed system response to get the system response as a function of time.

The most widely used transform method in systems analysis is the Laplace transform. In this method, the Laplace transform of the input and the output are found. The Laplace transform of the impulse response—which is given the special name of the system function—is then found by dividing the Laplace transform of the output by the Laplace transform of the input. The system operation is thus described in the transform plane, but most hydrologic situations will be described numerically rather than functionally. To determine the impulse response as a function of time involves the difficult problem of the numerical inversion of the Laplace transform.

In 1952, Paynter (*36*) applied the method of systems analysis based on the Laplace transform to various problems in hydraulic engineering. He was largely concerned with problems of water hammer and turbine governing, but in part III of his paper, he dealt with the problem of flood routing. Unfortunately, for the development of systems hydrology, Paynter's ideas were not followed up at the time.

In 1959, Nash (*31*), then working in the Hydraulic Research Station in Great Britain, attempted to describe the IUH in terms of its statistical moments. He showed that for a linear time-invariant system, the moment of the input, the impulse response, and the output are connected by the equation—

$$M_R(y) = \sum_{k=0}^{k=R} \binom{R}{k} M_k(h) M_{R-k}(x) \tag{33}$$

where $M_R(y)$ is the Rth moment of the function $y(t)$. Moments may be taken either about the time origin or about the respective centers of the individual functions. This is essentially a transform approach since the moments of a function are a transform of it, and Nash's theorem of moments, given above as equation 33, is the linkage equation between the transformed input, the

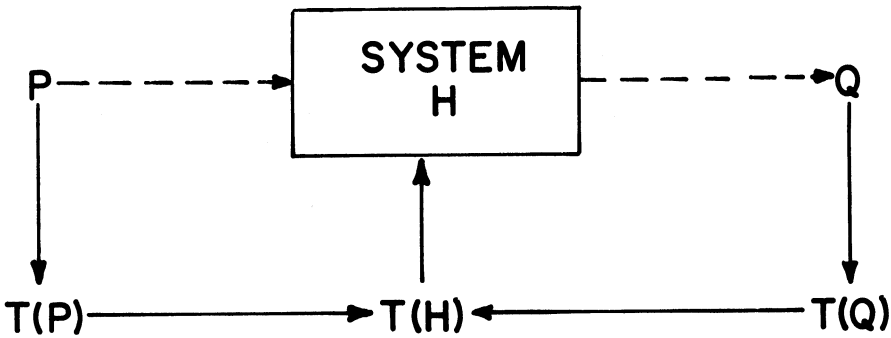

FIGURE 1–11.—Identification by transformation.

transformed output, and the transformed systems response. The problem of inversion (finding the form of a function given its moments) is again an extremely difficult one and can be shown to be equivalent to the problem of numerically inverting a Laplace transform.

Next, O'Donnell (*34*) applied harmonic analysis to the problem discussed by Nash. O'Donnell's approach was to find the Fourier coefficients of the system response. The method depends on the fact that the terms of a Fourier series are orthogonal. The response function is known (to a degree of accuracy depending on the length of the series) once the Fourier coefficients for the function are known. Thus, the harmonic analysis method used by O'Donnell does not encounter any difficulty in the inversion procedure. Because Fourier analysis is concerned with periodic functions, the method can, however, only be applied to systems with finite memory.

In 1964, Levi and Valdes (*28*), working in Mexico, applied the Fourier transform to the problem of systems identification in hydrology. In the same year, Diskin[4] took up Paynter's work and applied the Laplace transform in more detail to the study of unit hydrographs.

In 1965, Dooge (*16*) suggested the use of Laguerre coefficients rather than harmonic coefficients for the analysis of heavily damped systems, such as are encountered in hydrology. This method was developed because Dooge felt the method of harmonic analysis, which depends on sine curves as its basic elements, was not entirely suitable in hydrology where many functions were of a dead beat type rather than an oscillatory one. It was thought that if an orthogonal method could be derived in which the elements of the series were of much the same form as the gamma distribution (which had proved so useful

[4] DISHKIN, M. A BASIC STUDY OF THE LINEARITY OF THE RAINFALL-RUNOFF PROCESS IN WATERSHEDS. Ph.D. Thesis, Univ. Ill. Urbana. 1964. [Xerox copy available by purchase from University Microfilms, Inc., P.O. Box 1346, Ann Arbor, Mich. 48106 as Publication No. 64-8375.]

in applied hydrology), that the number of terms required to represent a given response function would be less than in the harmonic method.

The above methods of systems identification will be discussed in greater detail in lecture 5. Meanwhile, it is only necessary to note that they are all objective methods of system identification.

Correlation methods of system identification

The second group of objective methods of system identification consists of methods based on least squares correlation. The method of least squares was applied to the derivation of unit hydrographs by Snyder (*41*) in 1955 and also developed independently in Australia by Body (*8*) in 1959. Body published in detail the matrix operations involved and the adaption of the method for digital computers. Snyder (*42*) published the matrix formulation of the method in 1961.

The set of equations represented in equation 29 comprises $(p+1)$ equations in $(n+1)$ unknown values of h and, consequently, is overdetermined. In theory, any group of $(n+1)$ equations could be selected from the $(p+1)$ equations available to solve the equations for the values of the unknown ordinates (h_i) of the unit hydrograph. In practice, of course, the data are not exact, and, consequently, no unique mathematical solution exists which would be valid for all inputs. If the first $(n+1)$ equations are chosen and the equations solved by forward substitution, the ordinates of the unit hydrograph may become unstable and unrealistic. The procedure introduced by Snyder and Body is to use all the equations and the least squares criterion to produce the optimum values of the unknown ordinates of the unit hydrograph. The matrix form of the unit hydrograph equations is given by equation 30:

$$\{y\}_{p+1}=[X]_{p+1,n+1}\{h\}_{n+1,1} \tag{30}$$

The least squares formulation of the problem is given by:

$$[X]^T{}_{n+1,p+1}[y]_{p+1,1}=[X]^T{}_{n+1,p+1}[X]_{p+1,n+1}\{h\}_{n+1,1} \tag{34}$$

Since the product of the transposed matrix X^T and the original matrix X is necessarily square, this product can be inverted, and the vector of unknown unit hydrograph ordinates can be written as,

$$\{h\}_{n+1,1}=\{[X]^T[X]\}^{-1}[X]^T\{y\} \tag{35}$$

This procedure is shown diagrammatically in figure 1–12. The record of input is used to determine the input matrix, and this is then multiplied by its transpose. The output vector is also multiplied by the transpose of the input matrix, and these two products are used to determine the optimum unit hydrograph, which is then accepted as an estimate of the true unit hydrograph.

The method of time-series analysis, also shown in figure 1–12, can be classed as a correlation method. If the record is a continuous one, or a discrete record

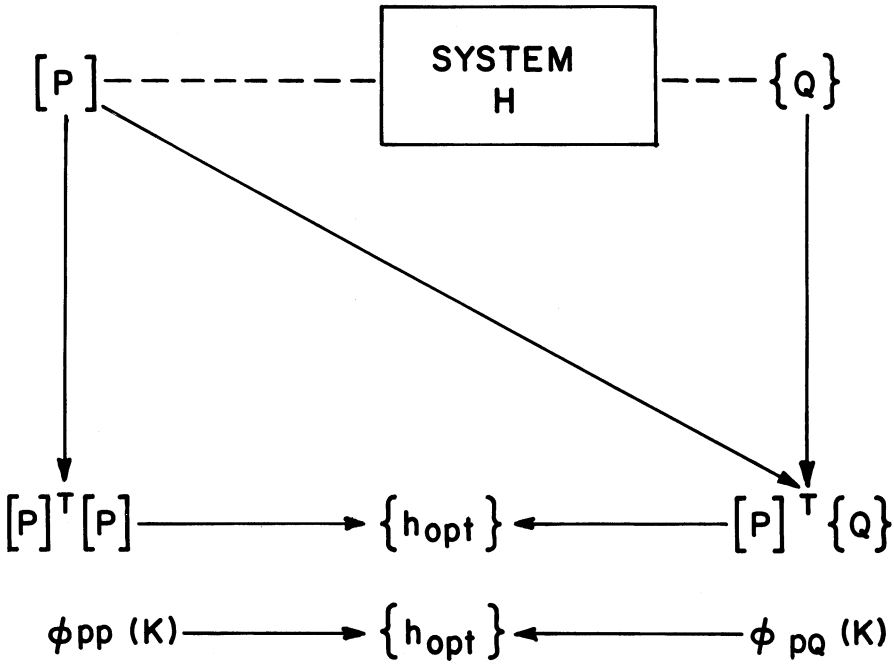

FIGURE 1–12.—Identification by correlation.

existing for infinite time, it is not possible to apply the least squares method, since the matrices become extremely large and impossible to invert. In the case of an inflow which is not isolated, it is also impossible to use the method of Laplace transforms or Fourier transforms since the function may not behave at infinity in accordance with the requirements of mathematical theory. However, a long-time series can be transformed and described in terms of its autocorrelation function. The autocorrelation function of a time series is defined as the limit:

$$\phi_{xx}(k) = \frac{1}{n} \sum_{i=-p}^{i=p} x(i)x(i+k) \tag{36}$$

where $n=2p+1$ is the number of data points as p tends to infinity.

Where two time series are known (for example, an input and an output), we can determine their cross-correlation coefficient which is defined as the limit:

$$\phi_{xy}(k) = \frac{1}{n} \sum_{i=-p}^{p} x(i)y(i+k) \tag{37}$$

as p tends to infinity. If we have a causal, linear, time-invariant system, it

can be shown that the optimum impulse response in the least squares sense is given by:

$$\phi_{xy}(k) = \sum_{j=0}^{j=\infty} h_{opt}(j)\phi_{xx}(k-j); \quad \text{when} \quad k>0 \tag{38}$$

which is a discrete Wiener-Hopf equation. We started off with the ordinary convolution equation (equation 26) and ended up with another convolution equation. However, equation 38 connects the cross correlation of x and y.

If the input is isolated, no advantage has been gained, and it can be shown that equation 38 is equivalent to the least squares procedure of Snyder and Body, though more complicated. If, on the other hand, we have an infinitely long time series which we are continuously sampling, then the problem has been reduced to manageable form. The time series approach is currently being developed at the Massachusetts Institute of Technology under Eagleson (*20*), and work is also being done by Bayazit[5] of the University of Ankara.

Methods of simulation

Even if we could completely solve the problem of identification, this would only enable us to predict the future outputs from an individual system. Complete identification would not help us in any way to predict the output from a system of the same class for which records of input and output were not available, or to study the effect of variations in the parameters of similar systems on their outputs. Furthermore, the identification of nonlinear systems is extremely difficult, and, in such cases, it is natural to turn to simulation rather than identification as the basis of a prediction. It is important to remember that we are still interested in the overall performance of the system rather than the details. We are looking for a reliable predictor rather than a photographic reproduction when we seek a model to simulate our system. The model system used to simulate an actual system may be either abstract or real. According to Chorafas (*9*), "Simulation is simply a working analogy. Analogy means similarity of properties or relations without identity." A model may be defined as being a system which can reproduce some, but not all of the properties of the prototype.

Figure 1–13 shows the division of methods of simulation into three broad groups. It is intended as a basis for discussion rather than a strict classification. In this tentative classification, the problem of simulation is looked upon as

---

[5] BAYAZIT, M. INSTANTANEOUS UNIT HYDROGRAPH DERIVATION BY SPECTRAL ANALYSIS AND ITS NUMERICAL APPLICATION. CENTO Symposium on Hydrology and Water Resource Devlpmt. Ankara. 1966.

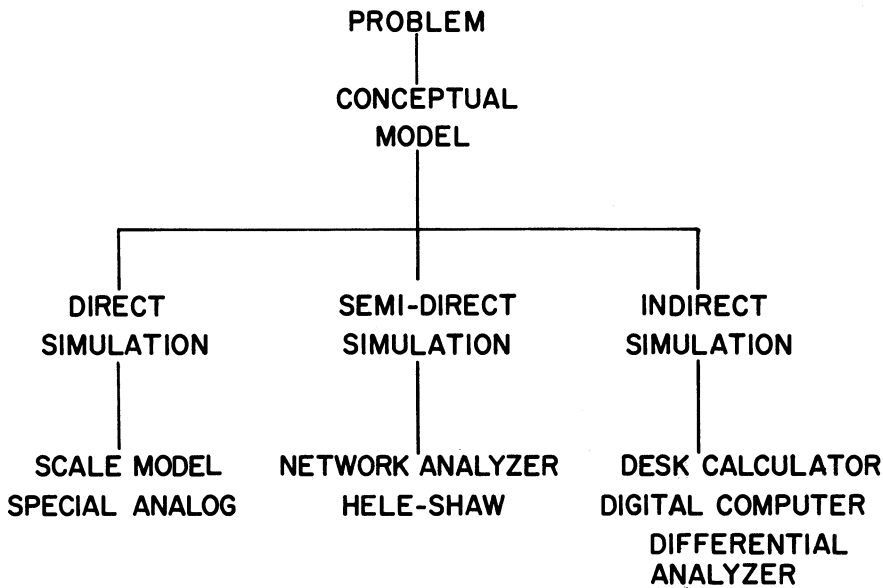

FIGURE 1–13.—Methods of simulation.

being a two-stage problem. First, we take the actual field problem and abstract from it a conceptual model of the problem. This conceptual model might be very simple or it might be extremely complex. In other words, we might do a lot of the work at this stage or very little. The next step is to attempt to derive quantitative results from the conceptual model. The method in which this is done often depends on the extent to which the conceptual model has been developed. The two stages shown on the figure represent the two problems of abstraction and of completion.

If the conceptual model has not been developed to any great extent, it will probably be necessary to use a direct method of simulation to get quantitative answers. An example from hydraulic engineering may be used to illustrate this.

In the design of a hydraulic structure, the conditions may be so complex that all we can say of our conceptual model is that we believe gravity forces to be dominant in the problem. We could then decide to build a model which was geometrically similar in some respect to the prototype and which would be designed according to model laws based on the Froude number. Such a hydraulic model would be a direct simulation of the problem and would be a close imitation of the prototype. It would be possible to recognize the different parts of the prototype in the model. On the other hand, a problem in the hydraulics of open channels might be solved by developing a much more complete conceptual model. This model would be based on the geometry of

the situation, the equation of continuity, and the dynamic equation of unsteady open channel flow.

The finite difference equations incorporating physical assumptions and the geometry of prototype would constitute an abstract model of the actual problem. If it were completely specified, the actual computations could be done on a general purpose computer of some type; thus, we might use a desk calculator, a digital computer, or a differential analyzer. In this type of indirect simulation, it would not be possible to identify visually any part of the prototype in the model. The physical model can only solve one particular ad hoc problem, but does not require a great deal of work at the conceptual phase. On the other hand, the indirect simulation on a computer of some type can solve a very wide variety of problems, but the amount of work done in setting up the problem, i.e., constructing the conceptual model is often very great. In between these two we have methods of semidirect simulation in which we can construct a model which will solve particular types of problems. Examples of these are network analyzers and Hele-Shaw models.

Simulation in hydrology

Figure 1–14 shows the Stanford Watershed Model Mark II used to simulate the land phase of the hydrologic cycle. Though the Mark II model is shown here, the Stanford model has since been developed to the Mark IV (*11*) and Mark V stage in which the performance of the model has been improved at a

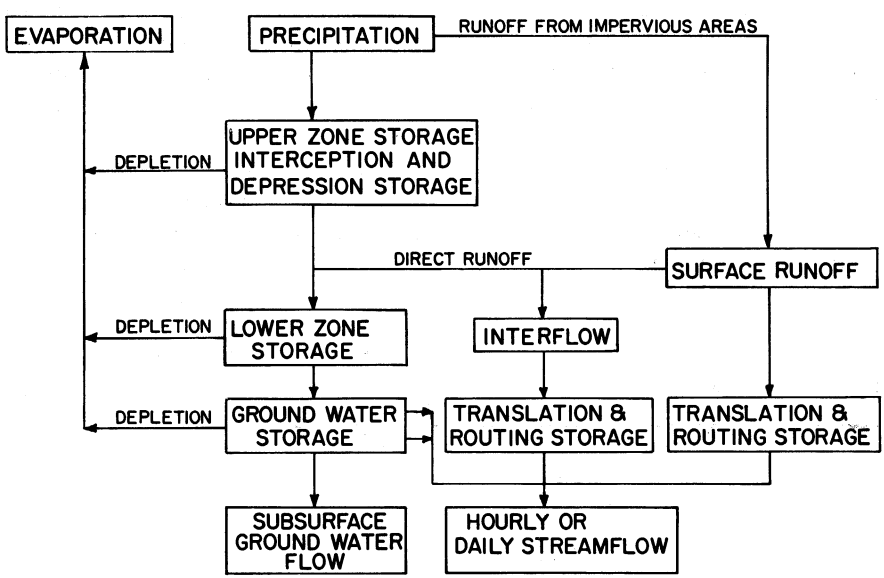

FIGURE 1–14.—Stanford Watershed Model Mark II.

cost of extra complexity. Figure 1–14, however, shows the main features of the Stanford model. The model as shown is essentially a conceptual model and represents the first, or conceptual phase, of the simulation process as described above. It is a flow diagram representing the main features of the simulation model, and it must be supplemented by operational rules for determining the amount of moisture movement from one component to another.

The computation, which is the second part of the simulation process, is carried out on a digital computer. The model shown in figure 1–14 could, of course, be computed by any other means, but the digital computer is the most convenient method. There have been many other instances of the simulation of subsystems or components in the hydrologic cycle and the solution on a digital computer.

Dawdy and O'Donnell (*12*) pioneered the systematic study of objective techniques for the optimization of parameters of simulation models. This key question is discussed in later lectures.

Numerous attempts have been made to simulate the direct storm runoff from a watershed by a conceptual model, which would be simple in form but would have essentially the same operation as the watershed under study. Many of these conceptual models involve some simple arrangement of linear storage elements only, or else a simple arrangement of linear storage elements and linear channels (*15*). In most cases, the behavior of these conceptual models is predicted by analytical methods; however, any method for final computation may be used.

Figure 1–15 shows the analog simulation of a linear storage element as given by Shen (*38*). In this case, the analog element is not a direct analog of a catchment element, but an analog simulation of a conceptual element for use where an arrangement of conceptual elements has been synthesized to simulate the action of the watershed. Figure 1–16 shows the simulation of a linear channel also by Shen. A linear channel is purely a conceptual element because no one has ever seen one and no one ever will. The analog units shown in figures 1–15 and 1–16 are direct analog simulations of the conceptual elements, but it is also possible to have indirect analog simulations in which the mathematical equation for the conceptual element is written down and then an

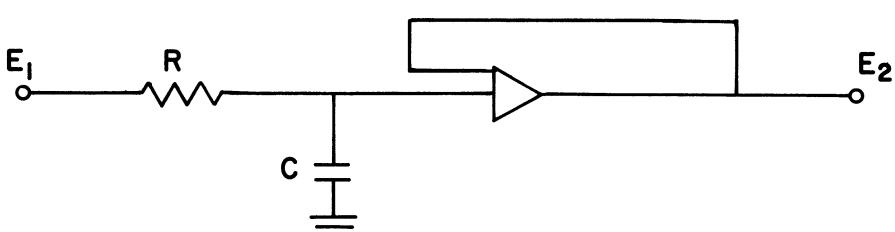

FIGURE 1–15.—Direct analog of linear reservoir.

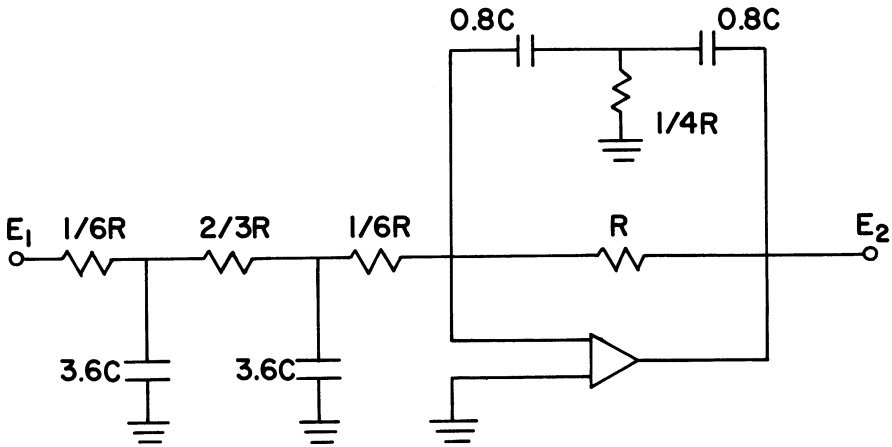

FIGURE 1–16.—Direct analog of linear channel.

analog unit assembled in which each of the mathematical operators is simulated and appropriately connected.

This is the end of a review of the development of parametric hydrology and a preview of the material to be covered in the present course. The development of the subject has been going in many scattered directions since 1932, but in recent years it has gathered pace and is beginning to settle into a consistent body of knowledge. No matter what our problem, no matter what types of models we seek to use, we face essentially the two difficult problems of system identification and system simulation. Our present knowledge is such that identification can only be carried out with some degree of success if we make the assumptions of linearity and time-invariance. We need not be restricted in simulation because we can build in the nonlinearity and time-variance into our model and predict the operation of the resulting nonlinear system in some fashion. Nevertheless, if we wish to simulate objectively, or indeed efficiently, it is desirable that the nonlinearities be reduced to a minimum and that if possible the nonlinearity be confined to one part of the model, while the remaining subsystems and their components are linear in action.

Problems on Hydrologic Systems

1. The following terms are commonly used in hydrology:

   Unit hydrograph
   S-hydrograph
   Instantaneous unit hydrograph (IUH)

In each case, write down the corresponding terms used in other disciplines to denote the same concept.

2. The Muskingum method is commonly used in flood routing. Describe this method and distinguish between the separate problems of prediction, identification, and simulation.

3. Describe a part of the hydrologic cycle with which you are familiar; use the nomenclature of the systems approach. Show the relationship of this part of the hydrologic cycle to the other parts of the cycle by means of a simple sketch. By means of a second sketch indicate how this part of the cycle might be considered as consisting of a number of subsystems.

4. For the part of the hydrologic cycle described in question 3, list one or more classical methods used in applied hydrology. Do these methods make the assumptions of linearity or time-invariance? Describe the methods using systems nomenclature.

5. For some particular part of the hydrologic cycle, give examples of the use of simulation in hydrologic forecasting.

Literature Cited

(1) Ackerman, W. C., Colman, E. A., and Ogrosky, H. O.
1955. FROM OCEAN TO SKY TO LAND TO OCEAN. U.S. Dept. Agr. Yearbook 1955: 41–51, illus.

(2) Ackoff, R. L.
1962. SCIENTIFIC METHODS. 464 pp. New York.

(3) Amorocho, J., and Hart, W. E.
1964. A CRITIQUE OF CURRENT METHODS IN HYDROLOGIC SYSTEMS INVESTIGATIONS. Amer. Geophys. Union Trans. 45(2): 307–321.

(4) ——— and Orlob, G. T.
1961. NON LINEAR ANALYSIS OF HYDROLOGIC SYSTEMS. Water Resources Center, Univ. Calif. (Berkeley) Contrib. 40, 147 pp., illus.

(5) Aseltine, John A.
1958. TRANSFORM METHODS IN LINEAR SYSTMES ANALYSIS. 300 pp., illus. New York.

(6) Beer, S.
1959. CYBERNETICS AND MANAGEMENT. 214 pp., illus. New York.

(7) Bellman, R. E.
1961. ADAPTIVE CONTROL PROCESSES: A GUIDED TOUR. 255 pp. Princeton, N.J.

(8) Body, D. N.
1959. FLOOD ESTIMATION: UNIT GRAPH PROCEDURES UTILIZING A HIGH-SPEED DIGITAL COMPUTER. Water Res. Found. Austral. (Sydney) Bul. 4, 41 pp., illus.

(9) Chorafas, D. N.
1965. SYSTEMS AND SIMULATION. 503 pp. New York.

(10) Collins, W. T.
1939. RUNOFF DISTRIBUTION GRAPHS FROM PRECIPITATION OCCURRING IN MORE THAN ONE TIME UNIT. Civ. Engin. 9(9): 559–561.

(11) Crawford, N. H., and Linsley, R. K.
1966. DIGITAL SIMULATION IN HYDROLOGY: STANFORD WATERSHED MODEL IV. Tech. Rpt. 39, 210 pp. Dept. Civ. Engin. Stanford University, Calif.

(12) DAWDY, D. R., and O'DONNELL, T.
1965. MATHEMATICAL MODELS OF CATCHMENT BEHAVIOUR. Amer. Soc. Civ. Engin., Jour. Hydraulics Div. 91(HY4): 123–139.
(13) DERUSSO, P. M., ROY, R. J., and CLOSE, C. M.
1965. STATE VARIABLES FOR ENGINEERS. 608 pp. New York.
(14) DOEBELIN, E. O.
1966. MEASUREMENT SYSTEMS: APPLICATION AND DESIGN. 743 pp. New York.
(15) DOOGE, J. C. I.
1959. A GENERAL THEORY OF THE UNIT HYDROGRAPH. Jour. Geophys. Res. 64(2): 241–256.
(16) ———
1965. ANALYSIS OF LINEAR SYSTEMS BY MEANS OF LAGUERRE FUNCTIONS. Soc. for Indus. and Appl. Math., Jour. Control, Ser. A, 2(3): 396–408. Philadelphia.
(17) ———
1967. THE HYDROLOGIC CYCLE AS A CLOSED SYSTEM. Internatl. Assoc. Sci. Hydrol. Bull., XIII, Ann. 1: 58–68. Gentbrugge.
(18) DRAPER, C. S., MCKAY, W., and LEES, S.
1952. INSTRUMENT ENGINEERING. 3 v. New York.
(19) DRENICK, R. F.
1965. AN APPRAISAL OF THE STATUS AND FUTURE OF SYSTEM THEORY. Proc. Symposium on System Theory. 380 pp. New York.
(20) EAGLESON, P. S., MEJIA-R, R., and MARCH, F.
1966. COMPUTATION OF OPTIMUM REALIZABLE UNIT HYDROGRAPHS. Water Resources Res. 2(4): 755–764.
(21) ELLIS, D. O., and LUDWIG, F. J.
1962. SYSTEMS PHILOSOPHY. 387 pp. New York.
(22) GARDNER, M. F., and BARNES, J. L.
1942. TRANSIENTS IN LINEAR SYSTEMS. V. 1: lumped constant systems. 389 pp., illus. New York.
(23) GUPTA, SOMESHWAR C.
1966. TRANSFORM AND STATE VARIABLE METHOD IN LINEAR SYSTEMS. 426 pp. New York.
(24) KOENIG, H. E., and BLACKWELL, W. A.
1961. ELECTRO-MECHANICAL SYSTEM THEORY. 504 pp. New York.
(25) KRAIJENHOFF VAN DE LEUR, D. A.
1958. A STUDY OF NON-STEADY GROUND WATER FLOW WITH SPECIAL REFERENCE TO A RESERVOIR COEFFICIENT. Ingenieur 70(19): 87.
(26) ———
1966. RUNOFF MODELS WITH LINEAR ELEMENTS. Part III, recent trends in hydrograph synthesis. TNO[6] Proc. and Inform. Note 13. The Hague.
(27) LEE, Y. W.
1960. STATISTICAL THEORY OF COMMUNICATIONS. 509 pp., illus. New York.
(28) LEVI, E., and VALDES, R.
1964. A METHOD FOR DIRECT ANALYSIS OF HYDROGRAPHS. Jour. Hydrol. 2(2): 182–190.

---

[6] TNO stands for "Organisatie Toegepast Natuurwetenschappelijk Onderzoek" [Netherlands Organization for Applied Scientific Research]. The abbreviation TNO is invariably used, and the full title does not appear even on publications of the organization.

(29) LYNCH, W. A., and TRUXAL, J. G.
1961. INTRODUCTORY SYSTEM ANALYSIS. 445 pp., illus. New York.

(30) MACFARLANE, A. G. J.
1964. ENGINEERING SYSTEMS ANALYSIS. 272 pp., illus. Reading, Mass.

(31) NASH, J. E.
1959. SYSTEMATIC DETERMINATION OF UNIT HYDROGRAPH PARAMETERS. Jour. Geophys. Res. 64(1): 111–115.

(32) ———
1960. A UNIT HYDROGRAPH STUDY WITH PARTICULAR REFERENCE TO BRITISH CATCHMENTS. Inst. Civ. Engin. Proc. 17: 249–282.

(33) ———
1967. THE ROLE OF PARAMETRIC HYDROLOGY. Inst. Water Engin. Jour. 21(5). Dublin.

(34) O'DONNELL, T.
1960. INSTANTANEOUS UNIT HYDROGRAPH DERIVATION BY HARMONIC ANALYSIS. Internatl. Assoc. Sci. Hydrol. Pub. 51: 546–557. Gentbrugge.

(35) ———
1966. METHODS OF COMPUTATION IN HYDROGRAPH ANALYSIS AND SYNTHESIS. Part III, recent trends in hydrograph synthesis. TNO Proc. and Inform. Note 13. The Hague.

(36) PAYNTER, H. M.
1952. METHODS AND RESULTS FROM M.I.T. STUDIES IN UNSTEADY FLOW. Boston Soc. Civ. Engin. Jour. 39(2): 120.

(37) ———
1960. ANALYSIS AND DESIGN OF ENGINEERING SYSTEMS. Cambridge, Mass.

(38) SHEN, J.
1965. USE OF ANALOG MODELS IN THE ANALYSIS OF FLOOD RUNOFF. U.S. Geol. Survey Prof. Paper 506-A, 24 pp.

(39) SHERMAN, L. K.
1932. STREAM FLOW FROM RAINFALL BY THE UNIT-GRAPH METHOD. Engin. News Rec., 108: 501–505.

(40) SIEBERT, W. M.
1961. SIGNALS IN LINEAR TIME-INVARIANT SYSTEMS. *In* E. H. Baghdady, ed., Communication System Theory. Ch. 3: 33–57. New York.

(41) SNYDER, W. M.
1955. HYDROGRAPH ANALYSIS BY THE METHOD OF LEAST SQUARES. Amer. Soc. Civ. Engin., Jour. Hydraulics Div. 81: 1–25.

(42) ———
1961. MATRIX OPERATION IN HYDROGRAPH COMPUTATIONS. TVA Res. Paper No. 1. Knoxville.

(43) STARK, L.
1968. NEUROLOGICAL CONTROL SYSTEMS. Studies in Bioengineering, 428 pp. New York.

(44) TUSTIN, A.
1957. MECHANISM OF ECONOMIC SYSTEMS. Ed. 2. 191 pp. England.

(45) WYMORE, A. WAYNE
1967. A MATHEMATICAL THEORY IN SYSTEMS ENGINEERING: THE ELEMENTS. 353 pp. New York.

(46) ZADEH, L. A., and DESOER, C. A.
1963. LINEAR SYSTEM THEORY. 628 pp. New York.

LECTURE 2: REVIEW OF PHYSICAL HYDROLOGY

Lecture 2 is a review of physical hydrology. It might be wondered why we bother with a review of physical hydrology since it has already been stated that the essence of the systems approach is to ignore the details of the physics involved. The systems approach was described as being an attempt to get around the complex geometry and the complex physics of the hydrologic system. If we were solely concerned with problems of identification, this attitude of ignoring the details of the system would be a reasonable one. We can identify a system (that is, find an expression for its impulse response) without any knowledge of physical hydrology at all. In 1965, Dooge (*12*) developed a method of system identification based on the use of Laguerre functions, which he thought might be appropriate in hydrologic problems. However, the first application of the new method was in the problem of determining residence times in chemical engineering. This was possible because the method was merely a method of system identification, and such methods are not by any means tied to the hardware of the particular system being analyzed.

If, on the other hand, we are going to *simulate* a hydrologic system, our knowledge of physical hydrology will be of greater importance. Such a knowledge is useful in model building because the closer we simulate the physical reality, the better our model will be. If we build a model that is in conflict with the physical realities, then we can hardly expect to get very good results from such a model. The present review, therefore, will be a brief summary of physical hydrology from the point of view of its possible use in the simulation of hydrologic systems by models of various types.

Our quantitative knowledge of physical hydrology is summarized in the various formulas which are available in the literature. These formulas are themselves models of the physical process which they are taken to represent. The factors that are included in a formula and the relation between them all involve simplifying assumptions concerning the relevant physical processes. This lecture deals with the various parts of the hydrologic cycle in turn and discusses some typical concepts and formulas. These are dealt with in more detail in general reference works such as those by Linsley, Kohler, and Paulhus (*32*); Chow (*6*); Soil Conservation Service (*50*); and Eagleson (*13*). The problem of measuring the various hydrologic quantities is discussed in publications by the World Meteorological Organization (*58*), the International Association of Scientific Hydrology (*25*), and by Corbett (*9*). Some important books and papers containing further information on physical hydrology are included among those listed at the end of this lecture.

Precipitation

In most of our work on hydrologic systems, precipitation is taken as an input. Consequently, we are usually not worried about the processes of hydrometeorology (*13, 15, 41*). Our main problems are those concerned with measurement and with the sampling that is inherent in any system of measurement. However, the question of snowmelt, which is on the borderline between meteorology and the land phase of hydrology, is of interest to us. If we wish to include snowmelt in a simulation model, then we must either know something or assume something concerning the physical processes involved (*14, 52*). If some of the components of our simulation models seem somewhat crude, we may take some consolation from the fact that most of the physical equations and formulas used in applied hydrology are equally crude. Thus the daily snowmelt in inches is frequently computed by a formula like the following:

$$M = 0.06\ (T_{\text{mean}} - 24) \tag{1}$$

where the daily snowmelt in inches (M) is related only to the mean daily temperature in degrees Farenheit (T). The additional effects of wind velocity and precipitation can be allowed for by using a formula of the following type:

$$M = (0.029 + 0.0084\, kV + 0.007\, P_r)\ (T_{\text{mean}} - 32) + 0.09 \tag{2}$$

In the first equation, the snowmelt is related only to the mean temperature, which is a crude way of relating the energy required to melt the snow to the energy available from radiation. In the second formula, radiation, convection, and conduction have all been taken into account. A more complex equation proposed by Light (*31*) is derived from an eddy-conductivity equation based on the analysis of atmospheric turbulence, and expresses the rate of snowmelt D as:

$$D = \frac{\rho k_0^2}{80 \log_e(a/z_0) \log_e(b/z_0)}\, u \left[c_p T + (e - 611)\, \frac{423}{p} \right] \tag{3}$$

where

D = snowmelt in centimeters per second
ρ = density of air
k_0 = von Karman's coefficient (0.38)
a = elevation of anemometer in centimeters
z_0 = roughness parameter (0.25 cm.)
b = elevation of hygrothermograph in centimeters
u = wind velocity at anemometer level in centimeters per second
c_p = specific heat of air (0.24)
T = air temperature, in degrees Centigrade, at hygrothermograph level
e = vapor pressure of air in millibars
p = atmospheric pressure in millibars

When we recall the nonhomogeneous nature of a watershed and the variations in the factors involved, we become somewhat doubtful of the advantage of using very complex equations.

Evaporation and Transpiration

Total evaporation has been defined as including water lost by evaporation from water surfaces, moist soil and snow, together with water lost by transpiration from vegetation, in the building of plant tissue and through interception (*30*). The concepts involved and formulas used have been reviewed elsewhere (*13, 17, 44, 45, 53, 57*).

The classical formula for evaporation from open waters was that given by Dalton (*10*):

$$E_0 = C(e_w - e_a) \tag{4}$$

which related the rate of evaporation E_0 from a water surface to the vapor pressure deficit $(e_w - e_a)$. Since then, many more complex formulas have been derived. The Dalton formula is the simplest formula based on the mass transport approach to evaporation. If allowance is made for the windspeed, V, we get an empirical formula of the form:

$$E_0 = (a + bV)(e_w - e_a) \tag{5}$$

If the variation of wind with height is taken into account, more complex formulas are obtained. Typical of these is the equation by Thornthwaite and Holzman (*46*), which is based on the logarithmic wind law and is:

$$E_0 = \frac{133.3(V_2 - V_1)(e_1 - e_2)}{(T - 459.4)\log_e(h_2/h_1)^2} \tag{6}$$

Still more complex formulas have been derived, and these were evaluated in the comprehensive Lake Hefner study (*17*). The study of the evaporation of Lake Hefner was a comprehensive operation lasting several years, but after a detailed study of the various formulas and a most careful measurement of conditions, it was concluded that the best equation for predicting evaporation from Lake Hefner would be of the form:

$$E_0 = 0.00177\ V\ (e_w - e_a) \tag{7}$$

which is of the same form as the empirical formulas used 50 years ago and only one step better than Dalton's original formula of 150 years ago.

An alternative approach to the subject of evaporation is the use of the energy budget. This can be summarized in the formula:

$$E_0 = \frac{Q_s + Q_a - Q_r - Q_b - Q_w}{\rho L(1 + R)} \tag{8}$$

The numerator in equation 8 gives the amount of energy available for the

transfer of both moisture and sensible heat from the water to the air in contact with it. It is given by the incoming shortwave radiation from the sun (Q_s) plus the energy advected into the body of water (Q_a) minus the total energy losses due to the combination of reflected shortwave radiation (Q_r), longwave back radiation (Q_b), and increased energy storage in the body of water (Q_w). To express the evaporation in terms of the amount of moisture transported, it is necessary to divide this net energy by the product of the density (ρ) and the latent heat of vaporization (L) corrected by means of the Bowen's (*4*) ratio (R) to allow for the transfer of sensible heat.

In 1948, Penman (*39*) combined the two ideas of mass transport and energy budget to produce a combination formula which enables us to estimate the evaporation from readily available climatic data. His basic formula is:

$$E_0 = \frac{E_a + (\Delta/\gamma)H}{1 + (\Delta/\gamma)} \tag{9}$$

where E_a is a measure of the aerodynamic evaporation or the evaporation from a mass transport point of view and H is a measure of the net energy required for evaporation. Penman and others have refined this approach in the past 20 years (*54*).

In the case of transpiration, we also have a wide variety of formulas of different degrees of complexity. In many of them, a figure for cumulative degree—days above a certain base temperature is used as a crude estimate of the energy. Thus, we have the Hedke formula (*18*), which was developed for use in irrigation work:

$$E_T = \Sigma k\ (T - T_0) \tag{10}$$

where the cumulative value of degree-days is used as a measure of the energy required for total transpiration. Blaney and Criddle (*3*) developed a number of formulas of the same general type. In 1948, Thornthwaite (*47*) developed the following empirical formula:

$$E_T = 1.6 \left(\frac{10T}{I}\right)^a \tag{11}$$

which enables the monthly transpiration (E_T) to be calculated from climatic data. In the formula, T is the monthly mean temperature and I is a temperature efficiency index which depends on the 12 monthly mean values of temperature. The exponent a is a function of I. The result obtained must be corrected for latitude and season to allow for the variation in the hours of sunshine. Penman (*40*) derived a formula for transpiration similar to his evaporation formula; it is written as:

$$E_T = \frac{E_a + (\Delta/\gamma)H_T}{1 + (\Delta/\gamma)} \tag{12}$$

In the above equation, the aerodynamic evaporation E_a is modified because

of change in the roughness factor of vegetation compared with open water and the energy term H_T is slightly changed because of the modification in the heat exchange occurring between the vegetation and the air. Penman found that in practice an extremely good estimate could be obtained by applying a coefficient to the estimate for open water evaporation:

$$E_T = f \cdot E_0 \tag{13}$$

The following formula by Turc (*49*) has been widely used in studies of water balance in Africa by French hydrologists:

$$E_T = \frac{P}{[0.9 + (P/L)^2]^{1/2}} \tag{14}$$

where P is precipitation and L is a temperature index.

We have, thus, a variety of formulas for evaporation and transpiration, all of which have a physical foundation to a lesser or greater extent. The final formulas are, however, all empirical and represent a simplification of the very complex physics involved. In incorporating them into a simulation of the hydrologic cycle or part of it, we are at liberty to choose the particular formula that suits our purpose best.

Infiltration and Percolation

The soil phase in the hydrologic cycle involves the phenomena of infiltration or the entry of water through the surface of the soil, its downward percolation through the unsaturated zone and its storage in that zone.

Information on infiltration may be obtained from the results of tests with infiltrometers, from the analysis of hydrographs from plot experiments and from the derivation of basin indices for complete watersheds. As in the case of other phenomena in the hydrologic cycle, a number of empirical formulas for infiltration are available. Kostiakov (*29*) proposed as an empirical formula for the amount of infiltration (F) during the period of high-rate infiltration:

$$F = bt^{1/2} \tag{15a}$$

which is equivalent to an infiltration rate (f) of:

$$f = \frac{b}{2t^{1/2}} \tag{15b}$$

Horton (*24*) proposed an exponential formula for infiltration which has been widely used:

$$f = f_c + (f_0 - f_c)e^{-kt} \tag{16a}$$

The corresponding formula for the amount of infiltration is:

$$F=f_c \cdot t+\left(\frac{f_0-f_c}{k}\right)(1-e^{-kt}) \tag{16b}$$

Philip (*42*) analyzed the problem of infiltration using the principles of soil physics and developed a series solution which can be approximated by:

$$F=S \cdot t^{1/2}+At \tag{17a}$$

or in terms of the infiltration rate:

$$f=\frac{S}{2t^{1/2}}+A \tag{17b}$$

The first term of Philip's equation is seen to be identical with the Kostiakov equation derived empirically 25 years earlier.
Holtan (*21*) used the relationship:

$$f-f_c=a(S-F)^n \tag{18a}$$

For a value of $n=2$ the equation for the infiltration rate can be written as:

$$f=f_c \cdot \sec^2\left[\sqrt{afc}(t_c-t)\right] \tag{18b}$$

All of these formulas are empirical or have empirical coefficients and thus may be considered as attempts to simulate the actual phenomena. Even if one takes the full equation due to Philip, to which equation 17 is an approximation, it is still a simulation of the process taking part in nature. This is because Philip's full equation is based on the assumption that there is a perfectly uniform soil, perfectly graded with no roots or root holes and no worms living in the soil. For such an idealized case, Philip's full equation is the most accurate of all the formulas given (except for very long elapsed times), but the question arises whether, in view of the uncertainties in the field, it is worth using anything more than a simple equation. We can never get away from simulation, and it is quite fruitless to argue about one equation being approximate and another one accurate. They all involve various degrees of approximation, and our choice is a free one. The balance is one between the need for simplicity on the one hand and for accuracy on the other.

Ground Water Flow

The physical assumptions underlying these formulas are given in such references as (*2*, *7*, *11*, *33*, *48*, and *56*). For one-dimensional flow in the saturated zone (that is, for the Dupuit assumptions), Darcy's Law takes the form:

$$q=-kh\frac{\partial h}{\partial x} \tag{19}$$

where q is the flow per unit area, k is the hydraulic conductivity, and h is

the depth of saturated flow. The equation of continuity for the same conditions takes the form:

$$\frac{\partial q}{\partial x}+f\frac{\partial h}{\partial t}=i(x,t) \tag{20}$$

where f is the specific yield and $i(x,t)$ is the rate of recharge at the watertable surface. Combination of these two equations gives:

$$-\frac{\partial}{\partial x}\left[kh\frac{\partial h}{\partial x}\right]+f\frac{\partial h}{\partial t}=i(x,t) \tag{21}$$

Equation 21 is nonlinear, but in classical ground water hydraulics the equation is linearized in one of two ways. Either we write:

$$-k\bar{h}\frac{\partial^2 h}{\partial x^2}+f\frac{\partial h}{\partial t}=i(x,t) \tag{22}$$

or else we write:

$$-\frac{k}{2}\frac{\partial^2(h^2)}{\partial x^2}+\frac{f}{2\bar{h}}\frac{\partial(h^2)}{\partial t}=i(x,t) \tag{23}$$

Ground water hydrologists have generally solved their problems on the basis of such linear equations, which suggests that the application of linear systems theory might be fruitful in this particular field. In view of the long use of linear methods in hydrology, it is remarkable that a general linear approach has not been used in ground water hydraulics except recently and then to a limited extent. Once the original nonlinear equations have been linearized, all of linear mathematics and all of linear systems theory are available for the solution of our problems.

Hydrologists frequently assume that the recession curve for base flow is given by:

$$Q=Q_0\exp\left(-\frac{t}{K}\right) \tag{24}$$

This represents a more restrictive assumption than the simple one of linearity. Equation 24 not only assumes that the ground water action is linear, but that it acts as a single linear reservoir. Having made this assumption with regard to the recession, there is no reason why the same assumption should not be made in regard to the recharge of ground water and the whole ground water system modeled by a single linear reservoir. In general, however, one can assume linearity without restricting oneself to a single linear reservoir. If the system is assumed to be linear, it is perfectly possible to derive a ground water unit hydrograph just as is done for direct storm runoff.

Overland Flow and Channel Flow

In the case of overland flow and open channel flow, we can write down the equation of continuity (including lateral inflow if necessary) and the dynamic equation. By using the classical methods of open channel hydraulics, we can, in theory at any rate, solve these equations for any particular case. Even with high-speed digital computers, the solution of such cases, even for simple geometry, is by no means an easy matter. Whether we use a characteristic solution or some method of finite differences based on a rectangular network, the computational problems are quite severe. In hydrology, the complexity of these problems has been avoided by using approximate methods of solution, most of which retain the continuity equation but replace the dynamic equation by some approximate relationship. This is to say that an applied hydrologist, when faced with the problem of overland flow or flood movement in rivers, has replaced the field situation by a simplified model (*20*, *59*).

The fundamental problem of overland flow can be quite simply stated. Rain falls vertically on the plane surface at the upstream end of which is either a divide or a vertical boundary as shown in figure 2–1. If the supply rate is constant, then for equilibrium conditions there will be a definite profile of steady overland flow. Even this steady flow problem is not an easy one to solve precisely. We do not know the friction laws operating in such a flow, or the effects of lateral inflow on the velocity distribution, or what the effect would be if infiltration were occurring simultaneously.

In tackling the hydrology of overland flow, we wish to know far more than the profile of steady state flow. What is required is the hydrograph of nonsteady flow, which occurs due to any change in input conditions (for example, the relatively simple case of a steady input of rain starting from initially dry conditions) and also the nature of the recession from the steady state after the

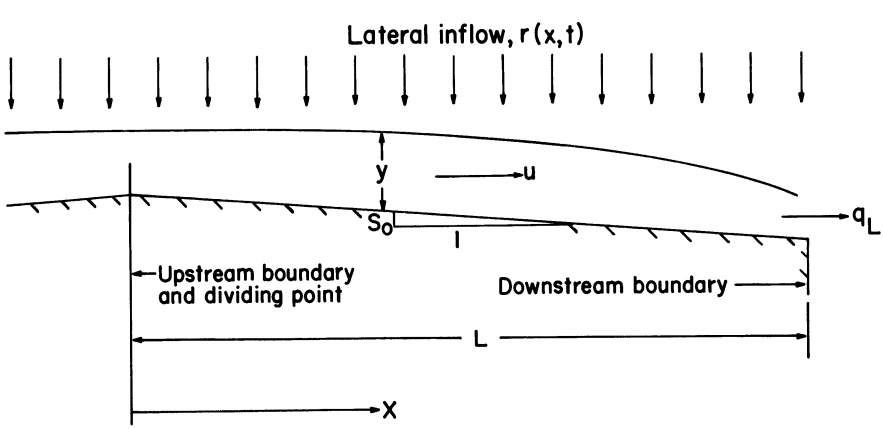

FIGURE 2–1.—Overland flow.

cessation of input. If the process were linear, one of these results would be sufficient to determine the hydrograph for any pattern of rainfall input. However, the phenomenon is nonlinear, and, thus, the principle of superposition cannot be used. Every shape of input becomes a separate case and must be handled on its own. Our interest is concentrated on three cases: (1) the rising hydrograph for a constant input and initially dry conditions, (2) the recession from steady outflow conditions after the cessation of input, and (3) the transition from one steady state to another when there are two different constant supply rates in successive intervals of time.

One approximation to the overland flow problem assumes that there is, at all times, a definite power relationship between the outflow at the downstream end and the average detention on the surface. A large number of experiments during the 1930's indicated that if the equilibrium runoff were plotted against the average equilibrium detention (that is, the storage at equilibrium divided by the surface area) for a given experimental plot, the relationship could be approximated by a straight line on log-log paper. This relationship applied to the condition when steady flow had been attained and storage was no longer changing, that is, to the steady state solution. Horton (*23*) assumed that this power relationship would hold throughout the unsteady flow phase and used this assumption as the basis of the solution for the particular case where the discharge was proportional to the square of the average detention.

The general assumption of a power relationship between discharge per unit area (q) and detention or storage per unit area may be written as:

$$q = as^c \tag{25}$$

This equation in fact replaces the full dynamic equation and is combined with the continuity equation:

$$q_e - q = \frac{ds}{dt} \tag{26}$$

to solve the problem. Equations 25 and 26 can be combined to give:

$$t = \frac{1}{a^{1/c} q_e^{\frac{c-1}{c}}} \int \frac{d(^q q_e)^{1/c}}{1 - q/q_e} \tag{27}$$

The integral on the right-hand side of equation 27 can be solved explicitly for $c = 1$ (the linear case) and also for $c = 2$, 3, and 4. By suitable transformations, it can also be solved for $c = \frac{3}{2}$ and for $c = \frac{4}{3}$. Horton solved the equation for $c = 2$, obtaining the result:

$$\frac{q}{q_e} = \tan h^2 (a^{1/2} q_e^{1/2} t) \tag{28}$$

This equation has since been used for solving the overland flow problem and designing airport installations (*51*). Izzard (*26*) carried out a series of notable

experiments on overland flow and proposed the use of a dimensionless rising hydrograph and dimensionless recession hydrograph, corresponding to the solution of equation 27 for $c=3$. Because the integral in equation 27 is of exactly the same form as the Bakhmeteff (*1*) varied flow function, tables of the latter function can be used to solve equation 27 and hence the problem of the overland flow hydrograph for any value of c which is tabulated. The above class of solutions may be referred to as the Horton-Izzard solution. It is not the only solution to the problem of overland flow and is given here only as an example. The kinematic wave method has also been applied to the problem of overland flow. Both approaches are discussed in more detail in lecture 9.

Hydrologic flood routing represents an early application of the systems approach to a hydrologic problem. The full problem of flood movement in rivers is complex, and in any case the details of the flow between the upstream and downstream ends of the reach under examination are not of great interest. When conditions in the whole reach are lumped, the continuity equation becomes:

$$I-Q=\frac{dS}{dt} \tag{29}$$

This equation is used in all flood routing methods and is combined with some special equation, which replaces the dynamic equation.

Among the well-established flood routing methods is the lag and route method which assumes:

$$S(t)=K\cdot Q\left(t+\frac{t_u}{2}\right) \tag{30}$$

that is, that the storage in the reach is proportional to the outflow taken at some fixed time later than the time at which the storage is measured. In another well-established routing method, the Muskingum method, the storage is taken as being proportional to weighted values of the inflow and the outflow:

$$S(t)=K[xI(t)+(1-x)Q(t)] \tag{31}$$

Among other important flood routing methods is the use of the diffusion analogy, which was introduced by Hayami about 1950 (*19*). This approach was dealt with by Henderson (*20*). More recently, we have had the Kalinin-Milyukov (*28*) method which is now widely used in Eastern Europe. This latter method is based on the division of the reach into a number of characteristic lengths and the treatment of each of these lengths as a linear storage element. Routing through the whole reach thus consists of routing through a cascade of linear storage elements, and the impulse response function is the gamma distribution. Though the gamma distribution was used by Nash (*36*),

Gray (*16*), Reich (*43*), and a number of others to represent the unit hydrograph, it was not applied to flood routing until this was proposed by Kalinin and Milyukov.

It is of interest that the above methods of routing floods through an open channel are all linear methods, thus all are linear models of the actual process. The whole subject of linear routing in open channels is discussed in lecture 9.

This brief review of physical hydrology is intended to give examples of the formulas which summarize our quantitative knowledge of physical hydrology and which are used in practice. In our best efforts at physical hydrology, we still make many assumptions that are, in truth, simulations. In many of these cases, the assumption of linearity has already been made. When such an assumption has been made, the attitude in parametric hydrology is to make the most of the assumption.

Problems on Physical Hydrology

1. List a number of alternative definitions given for the physical phenomena involved in one particular part of the hydrologic cycle. Discuss these definitions critically, and then list them in what you would consider to be their order of merit.

2. Briefly describe the methods used for measuring the physical phenomena involved in some particular part of the hydrologic cycle. Discuss these techniques critically, stating their advantages, disadvantages, and possible improvements. How does the method of measurement used affect the definition of the physical phenomenon involved? What criteria could be used to determine a suitable observation network for the particular phenomena involved?

3. State what physical principles are involved in one particular part of the hydrologic cycle. What physical formulas can be written down describing the physical phenomena of this part of the cycle? What physical phenomena are ignored in the formulas cited?

4. Mhat empirical formulas are used in hydrology in connection with the phenomena discussed in question 3? What is the relationship between these empirical formulas and any physical formulas available? What is the range of validity of the empirical formula? What is the accuracy of the empirical formulas?

5. What in your opinion are the most serious gaps in our knowledge of physical hydrology? How important are these gaps from the point of view of applied hydrology? Outline a research program which you think might help to bridge an important gap in our knowledge of this subject, and give a rough estimate of the cost and manpower involved.

Literature Cited

(1) BAKHMETEFF, B. A.
1932. HYDRAULICS OF OPEN CHANNELS. 329 pp., illus. New York.

(2) BEAR, J., ZASLAVSKY, D., and IRMAY, S.
1968. PHYSICAL PRINCIPLES OF WATER PERCOLATION AND SEEPAGE. UNESCO Arid Zone Res. XXIX. Paris. 465 pp., illus.

(3) BLANEY, H. S., and CRIDDLE, W. D.
1950. DETERMINING WATER REQUIREMENTS IN IRRIGATED AREAS FROM CLIMATOLOGICAL AND IRRIGATIONAL DATA. U.S. Dept. Agr. SCS-TP-96, 48 pp. August.

(4) Bowen, I. S.
1926. THE RATIO OF HEAT LOSSES BY CONDUCTION AND BY EVAPORATION FROM ANY WATER SURFACE. Phys. Rev., Ser. 2, 27: 779–787.

(5) CHILDS, E. C.
1957. THE PHYSICS OF LAND DRAINAGE. *In* J. N. Luthin, ed., Drainage of Agricultural Lands. Agronomy 7: 1–78.

(6) CHOW, VEN TE, ed.
1964. HANDBOOK OF APPLIED HYDROLOGY. 1418 pp., illus. New York.

(7) COLORADO STATE UNIVERSITY.
1963. SYMPOSIUM ON TRANSIENT GROUNDWATER HYDRAULICS. Civ. Engin. Sect. Fort Collins.

(8) COMMITTEE FOR HYDROLOGIC RESEARCH, TNO.
1964. HYDRAULICS OF STEADY FLOW TO WELLS. TNO Proc. and Inform. Note 10. The Hague.

(9) CORBETT, D. M., and PRICE, C. H.
1943. STREAM-GAUGING PROCEDURE. U.S. Geol. Survey Water-Supply Paper 888, 243 pp. (Reprinted 1962.)

(10) DALTON, JOHN.
1802. EXPERIMENTAL ESSAYS ON THE CONSTITUTION OF MIXED GASES; ON THE FORCE OF STREAM OR VAPOR FROM WATER. Manchester (England) Lit. & Phil. Soc. Mem., v. 5, pt. 2: 536–602.

(11) DEWIEST, J. M. R.
1966. GEOHYDROLOGY. 366 pp., illus. New York.

(12) DOOGE, J. C. I.
1965. ANALYSIS OF LINEAR SYSTEMS BY MEANS OF LAGUERRE FUNCTIONS. Soc. Indus. and Appl. Math., Jour. Control 2(3): 396–408.

(13) EAGLESON, P. S.
1969. DYNAMIC HYDROLOGY. 462 pp. New York.

(14) GARSTKA, W. U.
1964. SNOW AND SNOW SURVEY. *In* Ven Te Chow, ed., Handbook of Applied Hydrology. Sec. 10, 57 pp., illus. New York.

(15) GILMAN, C. S.
1964. RAINFALL. *In* Ven Te Chow, ed., Handbook of Applied Hydrology. Sec. 9, 69 pp., illus. New York.

(16) GRAY, D. M.
1962. DERIVATION OF HYDROGRAPHS FOR SMALL WATERSHEDS FROM MEASURABLE PHYSICAL CHARACTERISTICS. Iowa State Univ., Agr. and Home Econ. Expt. Sta. Res. Bul. 506, pp. 514–570. Ames.

(17) HARBECK, G. E., DENNIS, P. E., KENNON, F. W., and others.
1954. WATER LOSS INVESTIGATIONS: LAKE HEFNER STUDIES. U.S. Geol. Survey Water Supply Paper 269. [Previously published as U.S. Geol. Survey Circ. 229, 1952, as part of U.S. Navy Electron. Lab. Rpt. 237.]

(18) HARDING, S. T., chairman.
1930. CONSUMPTIVE USE OF WATER IN IRRIGATION: PROGRESS REPORT OF THE DUTY OF WATER COMMITTEE OF THE IRRIGATION DIVISION. Amer. Soc. Civ. Engin. Trans. 94: 1349–1399.

(19) HAYAMI, S.
1951. ON THE PROPAGATION OF FLOOD WAVES. Bul. 1: 1–16. Disaster Prev. Res. Inst., Kyoto University, Japan.

(20) HENDERSON, F. M.
1966. OPEN CHANNEL FLOW. 522 pp., illus. New York.

(21) HOLTAN, H. N.
1961. A CONCEPT FOR INFILTRATION ESTIMATES IN WATERSHED ENGINEERING. U.S. Dept. Agr. Agr. Res. Serv. ARS 41–51, 25 pp.

(22) HORTON, R. E.
1935. SURFACE RUNOFF PHENOMENA: PART I, ANALYSIS OF THE HYDROGRAPH. Horton Hydrol. Lab. Pub. 101, 73 pp. Ann Arbor, Mich.

(23) ———
1938. THE INTERPRETATION AND APPLICATION OF RUNOFF PLOT EXPERIMENTS WITH REFERENCE TO SOIL EROSION PROBLEMS. Soil Sci. Soc. Amer. Proc. 3: 340–349.

(24) ———
1940. AN APPROACH TOWARD A PHYSICAL INTERPRETATION OF INFILTRATION CAPACITY. Soil Sci. Amer. Proc. 5: 399–417.

(25) INTERNATIONAL ASSOCIATION OF SCIENTIFIC HYDROLOGY.
1965. SYMPOSIUM ON DESIGN OF HYDROLOGICAL NETWORKS (QUEBEC). Pubs. 67 and 68, Gentbrugge.

(26) IZZARD, C. F.
1946. HYDRAULICS OF RUNOFF FROM DEVELOPED SURFACES. Highway Res. Bd. (Washington, D.C.) Proc. 26: 129–146.

(27) ———
1950. TENTATIVE RESULTS ON CAPACITY OF CURB OPENING INLETS. *In* Surface Drainage. Highway Res. Bd Res. Rpt. 11-B, Washington, D.C.

(28) KALININ, G. P., and MILUYKOV, P. I.
1957. ON RASCHETE NEUSTANOVIVSHEGOSYA DVIZHENIYA VODY V OTKRYTYKH RUSLAKH [on the computation of unsteady flow in open channels.] Met. i. Gidrologiya Zhuzurnal, 10: 10–18. Leningrad.

(29) KOSTIAKOV, A. N.
1932. [on the dynamics of the coefficients of water percolation in soils.] 6th Comn., Internatl. Soc. for Soil Sci. Pt. A, pp. 15–21. Groningen and Moscow.

(30) LANGBEIN, W. B., and ISERI, K. T.
1960. GENERAL INTRODUCTION AND HYDROLOGIC DEFINITIONS. MANUAL OF HYDROLOGY: PART 1. GENERAL SURFACE WATER TECHNIQUES. U.S. Geol. Survey Water-Supply Paper 1541-A, 29 pp.

(31) LIGHT, P.
1941. ANALYSIS OF HIGH RATES OF SNOWMELTING. Amer. Geophys. Union Trans., pt. 1: 195–205.

(32) LINSLEY, R. K., KOHLER, M. A., and PAULHUS, J. L. H.
1949. APPLIED HYDROLOGY. 689 pp., illus. New York.

(33) LUTHIN, J. N., ed.
1957. DRAINAGE OF AGRICULTURAL LANDS. Agronomy 7, 620 pp., illus. Madison, Wis.

(34) MEYER, O H.
1940. ANALYSIS OF RUNOFF CHARACTERISTICS. Amer. Soc. Civ. Engin. Trans. 105: 86.

(35) MUSGRAVE, G. W., and HOLTAN, H. N.
1964. INFILTRATION. *In* Ven Te Chow, ed., Handbook of applied hydrology. Sec. 12: 30 pp., illus. New York

(36) NASH, J. E.
1958. THE FORM OF THE INSTANTANEOUS UNIT HYDROGRAPH. General Assembly of Toronto, Internatl. Pub 42, Compt Rend 3: 114–118. Gentbrugge.

(37) ———
1959. A NOTE ON THE MUSKINGUM FLOOD ROUTING METHODS. Jour. Geophys. Res. 64(8): 1053.

(38) OVERTON, D. E.
1964. MATHEMATICAL REFINEMENT OF AN INFILTRATION EQUATION FOR WATERSHED ENGINEERING. U.S. Dept. Agr. Agr. Res. Serv. ARS 41–99. 11 pp.

(39) PENMAN, H. L.
1948. NATURAL EVAPORATION FROM OPEN WATER, BARE SOIL AND GRASS. Roy. Soc. London Proc., Ser. A 193(1032): 120–145.

(40) ———
1963. VEGETATION AND HYDROLOGY. Commonwealth Bur. Soils Tech. Comm. 53, 124 pp. Commonwealth Agr. Bur., Farnham Royal, England.

(41) PETTERSSEN, SVERRE.
1958. INTRODUCTION TO METEOROLOGY. Ed. 2, 327 pp. New York.

(42) PHILIP, J. R.
1957. THE THEORY OF INFILTRATION: I—THE INFILTRATION EQUATION AND ITS SOLUTION. Soil Sci. 83(5): 345–357.

(43) REICH, B. M.
1962. DESIGN HYDROGRAPHS FOR VERY SMALL WATERSHEDS FROM RAINFALL. CER62BMR41, Civ. Engin. Sec., Colo. State Univ., 57 pp. Fort Collins.

(44) SELLERS, W. D.
1965. PHYSICAL CLIMATOLOGY. 272 pp. Chicago.

(45) SLATYER, R. O.
1967. PLANT-WATER RELATIONSHIP. 366 pp., illus. New York.

(46) THORNTHWAITE, C. W., and HOLZMAN, B.
1939. THE DETERMINATION OF EVAPORATION FROM LAND AND WATER SURFACES. Monthly Weather Rev. 67(1): 4–11.

(47) ———
1948. AN APPROACH TOWARD A RATIONAL CLASSIFICATION OF CLIMATE. Geog. Rev. 38: 55–94.

(48) TODD, D. K.
1964. GROUNDWATER. *In* Ven Te Chow, ed., Handbook of Applied Hydrology. Sec. 13, 55 pp., illus.

(49) TURC, L.
1954. LE BILAN D'EAU SOLS. RELATIONS ENTRE LES PRECIPITATIONS, L'EVAP ET L'ECOULEMENT [THE DISTRIBUTION OF WATER IN SOILS. RELATIONSHIPS BETWEEN PRECIPITATIONS, EVAPORATION AND FLOW]. Ann. Agron. 5: 491–596.

(50) U.S. DEPARTMENT OF AGRICULTURE.
1964. HYDROLOGY. Sec. IV, SCS Natl. Engin. Handbook. Washington, D.C.

(51) U.S. DEPARTMENT OF THE ARMY, CORP OF ENGINEERS.
1955. (A) SURFACE AND (B) SUBSURFACE DRAINAGE FACILITIES FOR AIRFIELDS. Part 13, ch. 1 and 2. *In* Engineering Manual. Washington, D.C.

(52) ———
1956. SNOW HYDROLOGY: SUMMARY REPORT OF THE SNOW INVESTIGATIONS. 437 pp., illus. Portland, Oreg.

(53) UNIVERSITY OF WAGENINGEN.
1956. INFORMAL MEETING ON PHYSICS AND AGRICULTURE. Netherlands Jour. Agr. Sci. 4(1).

(54) VAN BAVEL, C. H. M.
1966. THE THREE-PHASE DOMAIN IN HYDROLOGY. Symposium on water in the unsaturated zone. Internatl. Union Geod. and Geophys. Proc. Wageningen.

(55) ———
1966. POTENTIAL EVAPORATION: THE COMBINATION CONCEPT AND ITS EXPERIMENTAL VERIFICATION. Water Resources Res. 2(3): 455–467.

(56) VAN SCHILFGAARDE, JAN
1965. TRANSIENT DESIGN OF DRAINAGE SYSTEMS. Amer. Soc. Civ. Engin. Proc., Irrig. and Drain. Div. Jour. 91(IR3): 9–22.

(57) VEIHMEYER, F. J.
1964. EVAPOTRANSPIRATION. *In* Ven Te Chow, ed., Handbook of Applied Hydrology. Sec. 11, 38 pp., illus. New York.

(58) WORLD METEOROLOGICAL ORGANIZATION.
1965. GUIDE TO HYDROMETEOROLOGICAL PRACTICES. WMO-No. 168, TP 82. Sec. of the World Met. Organ. Geneva.

(59) YEVDJEVICH, V. M.
1964. BIBLIOGRAPHY AND DISCUSSION OF FLOOD ROUTING METHODS AND UNSTEADY FLOW IN CHANNELS. U.S. Geol. Survey Water-Supply Paper 1690, 235 pp.

LECTURE 3: REVIEW OF MATHEMATICS

If we are to develop objective methods for the identification and simulation of hydrologic systems, sooner or later we find ourselves involved in mathematics and sometimes unfamiliar mathematics at that. The purpose of lecture 3 is to review some topics in mathematics that have been found useful in parametric hydrology. The individual topics will appear again in subsequent lectures when these mathematical techniques are drawn on as required. There is no necessity to attempt to master completely the mathematics reviewed in the present lecture.

In parametric hydrology, as in all engineering, the best strategy for the applied scientist is to make himself generally aware of what mathematical tools are available but not to attempt to master them until he needs a particular piece of mathematics to solve a particular problem. Some of you may be more interested than others in particular aspects of the mathematical foundations of parametric hydrology or in its computational aspects. Those interested in such topics might find it useful to go through the references at the end of this lecture in regard to the particular topic of interest and to work steadily through the problems referring to that particular topic. Those who are not interested in either analytical or computational mathematics need not worry unduly about this aspect of our subject, but can accept the pragmatic view that the techniques discussed here are well-founded and practicable. Books which the author has found useful in respect of more than one mathematical topic of interest in systems analysis are those by Gullemin (*8*), Raven (*20*), Korn and Korn (*12*), and Abramowitz and Stegun (*1*).

Orthogonal Polynomials and Functions

The following set of functions—

$$g_0(t), g_1(t), \ldots\ldots g_m(t), \ldots\ldots g_n(t), \ldots\ldots$$

is said to be orthogonal on the interval $a<t<b$ with respect to the positive weighting function $w(t)$ if:

$$\int_a^b w(t)g_m(t)\bar{g}_n(t)\,dt=0,\ m\neq n \tag{1a}$$

$$\int_a^b w(t)g_n(t)\bar{g}_n(t)=\gamma_n \tag{1b}$$

where the standardization factor (γ_n) is a constant depending only on the

value of n. These two equations can be combined as follows:

$$\int_a^b w(t)\, g_m(t)\, \bar{g}_n(t) = \gamma_n \cdot \delta_{mn} \tag{1c}$$

where δ_{mn} is the Kronecker delta, which is equal to 1 when m equals n, but zero otherwise.

If a function is expanded in terms of a complete set of orthogonal functions as defined above:

$$f(t) = \sum_{k=0}^{k=\infty} c_k g_k(t) \tag{2}$$

then the property of orthogonality can be used to show that the coefficient (c_k) in the expansion is uniquely determined by:

$$c_k = \frac{1}{\gamma_k} \int_a^b w(t)\, \bar{g}_n(t) f(t)\, dt \tag{3}$$

If each of the functions $g_k(t)$ is so written that the factor of standardization γ_k is incorporated into the function itself, the set of functions is said to be normalized as well as orthogonal. In a similar fashion, the weighting function $w(t)$ can for convenience be incorporated into the function $g_k(t)$.

At some time or other, most engineers come in contact with Fourier series, which are the basic classical orthogonal functions in engineering mathematics. The vast majority of functions in engineering analysis and synthesis can be represented by an expansion of the form:

$$f(t) = \tfrac{1}{2} a_0 + \sum_{k=1}^{k=\infty} (a_k \cos kt + b_k \sin kt) \tag{4}$$

It can be shown (*8*) that sines and cosines are orthogonal over a range of length 2π with respect to the weighting function 1 and with a standardization factor π as follows:

$$\int_a^{a+2\pi} \cos(mt)\, \cos(nt)\, dt = \pi \cdot \delta_{mn} \tag{5a}$$

$$\int_a^{a+2\pi} \sin(mt)\, \sin(nt)\, dt = \pm\pi \cdot \delta_{mn} \tag{5b}$$

$$\int_a^{a+2\pi} \cos(mt)\, \sin(nt)\, dt = 0 \tag{5c}$$

Because the terms of the Fourier series have this property of orthogonality,

the coefficients a_k and b_k in equation 4 can be evaluated from:

$$a_k = \frac{1}{\pi} \int_{-\pi}^{\pi} f(t) \cos(kt)\, dt \tag{6a}$$

$$b_k = \frac{1}{\pi} \int_{-\pi}^{\pi} f(t) \sin(kt)\, dt \tag{6b}$$

From a systems viewpoint, the significance of equation 4 is that the function is decomposed into a number of elementary signals, each of which is sinusoidal in form. For mathematical manipulation, it is frequently more convenient to write the expansion given in equation 4 as a complex Fourier series:

$$f(t) = \sum_{k=-\infty}^{\infty} C_k \exp(ikt) \tag{7}$$

For this exponential form of the Fourier series, the property of orthogonality is expressed as:

$$\int_{a}^{a+2\pi} \exp[i(m-n)t]\delta \cdot dt = 2\pi \cdot \delta_{mn} \tag{8}$$

where δ_{mn} is the Kronecker delta, that is, is equal to 1 when $m=n$, but zero otherwise.

We can determine the complex coefficients in equation 7 as:

$$C_k = \frac{1}{2\pi} \int_{-\pi}^{\pi} \exp(-ikt) f(t)\, dt \tag{9}$$

If the function being expanded is a real function, then the coefficients a_k and b_k in equations 4 and 6 will be real, whereas the coefficient c_k in equations 7 and 9 will be complex. The relationships between the coefficients are given by:

$$c_k = \tfrac{1}{2}(a_k - ib_k) \tag{10a}$$

$$c_{-k} = \tfrac{1}{2}(a_k + ib_k) \tag{10b}$$

Though Fourier series are widely used in systems engineering, they are not the only types of orthogonal functions which are of use. There are three classical cases of orthogonal polynomials. These are (1) the *Legendre* polynomials, which are orthogonal on a finite interval with respect to a unit weighting function; (2) the *Laguerre* polynomials, which are orthogonal on a semi-infinite interval with respect to the weighting function $\exp(-t)$; and (3) the *Hermite* polynomials, which are orthogonal on an interval infinite in both directions with respect to a weighting function $\exp(-t^2)$. Of these, only

the Laguerre functions have been used in parametric hydrology. Their definition can be written as:

$$\int_0^\infty \exp(-t) L_m(t) L_n(t)\, dt = \delta_{mn} \tag{11a}$$

It can be shown that the polynomials satisfying the above relationship are given by:

$$L_n(t) = \sum_{k=0}^{k=n} (-1)^k \binom{n}{k} \frac{t^k}{k!} \tag{12}$$

By incorporating the weighting factor in the Laguerre polynomial, we can define a Laguerre function ϕ_n as:

$$\phi_n(t) = \exp\left(-\frac{t}{2}\right) L_n(t) \tag{13a}$$

$$= \sum_{k=0}^{k=n} (-1)^k \binom{n}{k} \frac{e^{-t/2} t^k}{k!} \tag{13b}$$

which will obey the simple relationship:

$$\int_0^\infty \phi_m(t) \phi_n(t)\, dt = \delta_{mn} \tag{11b}$$

which is an alternative form of equation 11a.

It can be seen from equation 13b that a Laguerre function can be expressed as a series of gamma distributions with integral exponents. Therefore, any function can conveniently be expanded through the medium of Laguerre functions in terms of a series of gamma distributions with integral exponents. This is of interest because of the use of the gamma distribution (not necessarily with an integral exponent) to simulate system responses in hydrology.

So far we have been talking about functions whose arguments are continuous and which are orthogonal under the operation of integration. In hydrology, our data are frequently defined only at certain discrete points or as averages over certain intervals so that the data are not available in continuous form. Under these circumstances, it is necessary to use discrete rather than continuous mathematics. Unfortunately, most engineers are trained in continuous mathematics and find some difficulty in going over to the discrete analogs of the continuous formulas and methods. Instead of defining orthogonal functions as in equation 1, we can define discrete functions to be orthogonal if:

$$\sum_{s=a}^{s=b} w(s) g_m(s) g_n(s) = \delta_n \delta_{mn} \tag{14}$$

where s is a discrete variable.

The Fourier approach can be applied to a discrete set of equally spaced data as well as to continuous data (see "Time Series Analysis of Discrete Data," lecture 6). The method of harmonic analysis or trigonometrical interpolation is based on the orthogonality under summation of the sines and cosines of $(2\Pi/N \cdot ks)$. Apart from the special case of harmonic analysis, discrete orthogonal functions are not discussed to any great extent in the mathematical literature.

If an attempt is made to apply Laguerre functions to discrete data, it is found that the Laguerre functions are not orthogonal under summation. It was found that the discrete analog of the Laguerre function defined by equation 13b was:

$$f_n(s) = (\tfrac{1}{2})^{(s+n+1)/2} \sum_{k=0}^{k=n} (-1)^k \binom{n}{k} \binom{s}{k} \tag{15}$$

The polynomial in equation 15 is a special case of the *Meixner* polynomials. Comparison of equation 15 with the corresponding equation 13 for the continuous case reveals a number of significant differences. The weighting function $\exp(-t/2)$ in equation 13 has been replaced by the weighting function $(\tfrac{1}{2})^{s/2}$ in equation 15, and the polynomial term $t^k/k!$ in equation 13 has been replaced by $\binom{s}{k}$. If allowance is made for the difference in the operations in the continuous and discrete cases, these terms are seen to correspond. Thus, $\exp(t)$ may be defined as the function which differentiates into itself; similarly, the function 2^s is a function which forward differences into itself. The differentiation of $t^k/k!$ gives $t^{k-1}/(k-1)!$ while the forward differencing of $\binom{s}{k}$ gives $\binom{s}{k-1}$.

Further information concerning Fourier series and orthogonal polynomials can be found in the references at the end of the lecture; notably in Guillemin (*8*), Hamming (*9*), Hildebrand (*10*), Lanczos (*14*), and Rainville (*17*).

Fourier and Laplace Transforms

Fourier and Laplace transforms have a number of applications in the linear theory of hydrologic systems. They are useful in the solution of linear equations in dealing with the operation of linear systems and particularly in analyzing the transient behavior of systems. In addition, when the moments of functions are used to characterize the functional relations between the input and output of a system, Fourier and Laplace transforms can be used to determine the moments of given functions.

Transformation of the original function is made to simplify the mathematical procedure. On first attempting to master the techniques of Fourier and Laplace transforms, the engineer may think that very little simplification is

achieved. However, once mastered, the techniques are extremely useful, particularly since the Laplace transforms and, to a lesser extent, the Fourier transforms are tabulated like logarithms or trigonometrical functions. By using the Laplace transform, it is possible to transform an ordinary linear differential equation with constant coefficients into an algebraic equation which is far easier to solve. It is also possible to convert a partial differential equation into an ordinary differential equation, again achieving a tremendous simplification in the type of problem to be solved. Of course, these simplifications are made at the cost of having to understand Laplace transforms.

The Fourier transform is particularly useful in the analysis of the transient behavior of stable systems. From one point of view, the Fourier transform may be looked on as a limiting form of a Fourier series. The latter apply to functions that are periodic outside the interval of integration and consist of an infinite series in which each term refers to a definite discrete frequency. If the interval of integration is increased indefinitely, the series will be replaced by an integral as follows:

$$f(t) = \frac{1}{2\pi} \int_{-\infty}^{\infty} F(\omega) \exp(i\omega t)\, d\omega \tag{16}$$

which corresponds to equation 7 with $F(\omega)$ corresponding to c_k, with integration replacing summation, and with the term arising from the standardization constant (2Π) appearing in the equation of the series instead of appearing in the equation for calculating the coefficients. Just as the coefficients c_k in equation 7 can be obtained from equation 9, so the function $F(\omega)$ can be obtained from:

$$F(\omega) = \int_{-\infty}^{\infty} f(t) \exp(-i\omega t)\, dt \tag{17}$$

It would be equally permissible to introduce the standardization constant 2Π in equation 17 and omit it from equation 16, or even to introduce the square root of the factor into each of the equations.

Instead of looking on equation 17 as a limiting form of equation 9, it is possible to consider it merely as the equation defining the transformation of $f(t)$ from the time domain to the frequency domain. Equations 16 and 17 have the advantage that, unlike equations 7, 8, and 9, they are not confined to periodic phenomena. This advantage, however, is offset by the fact that whereas equation 7 enables us to evaluate the function to a high degree of accuracy by knowing the values of c_k, equation 16, which represents the inversion of the Fourier transform, is not by any means as easy to handle.

If the system we are examining is not stable, or if the functions involved do not fulfill certain other conditions, then the Fourier transform not of $f(t)$ itself, but of $f(t)e^{-ct}$, where c is a real number. Making this change gives us

the bilateral Laplace transform of the function:

$$F_B(s) = \lambda_B[f(t)] \tag{18a}$$

$$= F[e^{-ct}f(t)] \tag{18b}$$

$$= \int_{-\infty}^{\infty} e^{-ct}f(t)e^{-i\omega t} \cdot dt \tag{18c}$$

$$= \int_{-\infty}^{\infty} f(t)e^{-st}\,dt \tag{18d}$$

As ordinarily used, the Laplace transform is only defined between zero and plus infinity, and virtually all tables are for this unilateral Laplace transform. In this form we have:

$$F(s) = \lambda[f(t)] \tag{19a}$$

$$= \int_{0}^{\infty} f(t)e^{-st}\,dt \tag{19b}$$

Equation 19b is the Laplace transform equivalent of equation 17 above.

The Laplace transform can be inverted to give the original function in the same way as equation 16 by using the expression:

$$f(t) = \frac{1}{2\pi i}\int_{c-i\infty}^{c+i\infty} F(s)e^{ts}\,ds \tag{20}$$

Again equation 20 is difficult to solve, but must be used unless the function $F(s)$ can be found in a set of Laplace transform tables. Numerical inversion of the Laplace transform is quite difficult and involves the use of orthogonal functions to represent the Laplace transform and the inversion of these functions term by term.

For discrete functions, the Laplace transform must be replaced by the Z-transform. This can be written as:

$$Z[f(nT)] = \lambda[f(nT)\delta(t-nT)] \tag{21a}$$

$$= \sum_{n=0}^{n=\infty} f(nT)e^{-nTs} \tag{21b}$$

$$= \sum_{n=0}^{n=\infty} f(nT)Z^{-n} \tag{21c}$$

where

$$e^{Ts} = Z \tag{21d}$$

This discrete transform has properties similar to those of the Laplace transform and has been tabulated.

Further information on transforms and their use in systems analysis can be

found in the following. Aseltine (*2*) Doetsch (*4*), Jury (*11*), and Papoulis (*16*). Extensive tables of transforms are available in Erdelyi (*5*) and Roberts and Kaufman (*21*).

Differential Equations

Ordinary differential equations are differential equations in a single variable. If we are dealing with a lumped system, with lumped inputs and outputs, then we will have only ordinary differential equations to handle in which the single variable will be time. Ordinary differential equations are classified in respect to their order and degree. The order of a differential equation is the order of the highest derivative present in the equation. The degree of the equation is the power to which the highest derivative is raised. A linear equation must of necessity be of the first degree because otherwise there would be an essential nonlinearity and the principle of superposition would not apply.

In a linear differential equation, all the derivatives in the equation must be to the first power and their coefficients must not be functions of the dependent variable. Thus, if we have an ordinary differential equation—or system of ordinary differential equations—which describes the dependent variable (y) and its derivatives with respect to the independent variable (t) as functions of the independent variable (t), then there is no restriction on the order of the derivatives but each derivative must appear only to the first power, and, in addition, the coefficients of the derivatives cannot be functions of y but may be functions of t. The general form of such an equation is:

$$a_o(t)\frac{d^ny}{dt^n}+\ldots\ldots a_{n-k}\frac{d^ky}{dt^k}+\ldots\ldots a_n(t)y=x(t) \tag{22}$$

If the coefficients are neither functions of y nor of t but are constants, then we have an ordinary differential equation with constant coefficients given by:

$$\frac{d^ny}{dt^n}+\ldots\ldots a_{n-k}\frac{d^ky}{dt^k}+\ldots\ldots a_ny=x(t) \tag{23a}$$

Equation 22 could represent the operation of a lumped linear system, but for equation 23 to represent the operation of a system, the system would have to be both linear and time-invariant.

Since our starting point in systems analysis is the study of lumped, linear, time-invariant systems, we will first be concerned in our analyses with the solution of linear ordinary differential equations with constant coefficients such as equation 23a. An alternative form for the latter equation is:

$$D^ny+a_1D^{n-1}y+\ldots\ldots a_iD^{n-i}y+\ldots\ldots a_ny=x(t) \tag{23b}$$

where D is the differential operator. This may also be written as:

$$p(D)=x(t) \tag{23c}$$

An equation such as 23 with a function of t on the right-hand side is said to be nonhomogeneous and is more difficult to solve than a homogeneous equation where the right-hand side is zero.

In accordance with the principle of solving simple problems first, the first step is to look at the homogeneous equation:

$$p(D)y=0 \tag{24}$$

and postpone solution of the full nonhomogeneous equation until a solution of the homogeneous equation has been found. The classical method of solving this equation is to assume that the solution is made up of terms of the form:

$$y=c\cdot\exp(st) \tag{25a}$$

Any value of s which satisfies:

$$p(s)=0 \tag{25b}$$

where $p(s)$ is the same polynomial as $p(D)$ in equation 24, will give a solution of equation 24. If the original equation is of the nth order, then there will be n roots, real or complex, for equation 25a. Consequently, the general solution of equation 24, which is known as the complementary function, is given by:

$$y=\sum_{k=1}^{n} c_k \exp(s_k t) \tag{25c}$$

Real values of s_k give rise to exponential terms and complex values of s_k to sinusoidal terms. In hydrologic systems which are heavily damped, the roots are usually negative and real so that the solution consists of a series of exponentials with negative arguments. The n unknown constants c_k are obtained from the boundary conditions.

Having solved the homogeneous equation, we now move on to the problem of solving the nonhomogeneous equation. If a particular solution of the nonhomogeneous equation can be found:

$$y=y_p(t) \tag{26}$$

then the complete solution of the nonhomogeneous equation is given by:

$$y=y_p(t)+\sum_{k=1}^{n} c_k \exp(s_k t) \tag{27}$$

in which the first term of a particular integral will satisfy the right-hand side of the equation, and the second term or complementary function will satisfy the boundary conditions.

The solution of ordinary differential equations, such as equation 23, can be greatly facilitated by the use of the Laplace transform. By taking the Laplace transform of the equation and using the rules for the Laplace transform of a derivative, we obtain an algebraic equation for the variable s in which the

boundary conditions are automatically incorporated. If the function on the right-hand side of the equation is simple, its Laplace transform may be included. If not, it may be replaced by a delta function and the solution for this case obtained. The solution for the actual right-hand side is then obtained by convoluting the function on the right-hand side of the original equation with the solution obtained by using a delta function. If the system is a complex one, there may be derivatives on the right-hand side of the equation, and the use of the delta function may require some caution and a mastery of its manipulation.

If the system has distributed rather than lumped characteristics, then its operation will be described by a partial differential equation. Most of the partial differential equations encountered in engineering analysis are of the second order. For one space dimension, the general second order homogeneous linear equation with constant coefficients is given by:

$$a\frac{\delta^2 y}{\delta x^2}+b\frac{\delta^2 y}{\delta x \delta t}+c\frac{\delta^2 y}{\delta t^2}=d\frac{\delta y}{\delta x}+e\frac{\delta y}{\delta t}+fy \tag{28}$$

The first thing to determine about a partial differential equation is whether it is hyperbolic, parabolic, or elliptic in form. This depends on whether the discriminate b^2-4ac is respectively greater than, equal to, or less than zero. Hyperbolic and parabolic partial differential equations correspond to problems of propagation (in both directions respectively), whereas elliptic differential equations represent the way in which the condition around the boundary effects the interior of a space. The appropriate types of boundary conditions are different for the three different types of equations.

Further details on the subject of differential equations and their solution can be found in references by Lambe and Tranter (*13*), Fox (*7*), and Sneddon (*22*).

Matrices

Matrices are essentially mathematical shorthand for representing arrays of elements. A matrix is an array or table of numbers. Thus, we define the matrix A as:

$$A=\begin{bmatrix} a_{11}\, a_{12} \;\ldots\ldots\; a_{1n} \\ a_{21}\, a_{22} \;\ldots\ldots\; a_{2n} \\ \ldots\ldots\ldots\ldots\ldots \\ \ldots\ldots\ldots\ldots\ldots \\ a_{m1}\, a_{m2} \ldots\ldots\; a_{mn} \end{bmatrix}$$

This matrix, which has m rows and n columns, is referred to as an m by n matrix.

Matrix algebra tells us what rules should be used to manipulate such arrays

of numbers. If a matrix C is composed of elements each of which is given by adding the corresponding elements of matrix A and matrix B, that is:

$$c_{ij}=a_{ij}+b_{ij} \tag{29a}$$

then matrix C is said to be the sum of the two matrices A and B, and we write:

$$C=A+B=B+A \tag{29b}$$

Matrix multiplication is defined as the result of the operation:

$$C=A\cdot B \tag{30a}$$

where the elements of C are defined as:

$$C_{rt}=\sum_{s} a_{rs}b_{st} \tag{30b}$$

that is to say, the element at the intersection of the rth row and the tth column in the C matrix is obtained by multiplying, term by term, the rth row of the A matrix by the tth column of the B matrix and summing these products. This definition implies that matrix A has the same number of columns as matrix B has rows. It must be remembered that matrix multiplication is in general noncommutative, that is:

$$A\cdot B\neq B\cdot A \tag{30c}$$

A certain amount of nomenclature must be learned in order to be able to use matrix algebra. A square matrix with the number 1 on all points of the principal diagonal (that is, the one from top left to bottom right) and zero on all the off-diagonal points is known as the unit matrix. It serves the same function as the number 1 in ordinary algebra; it can be verified that multiplication of a matrix by the unit matrix gives the original matrix. A diagonal matrix is one in which the elements on the main diagonal are nonzero, but all the other elements are zero. An upper triangular matrix may have nonzero elements on the principal diagonal and above, but only zero elements below the main diagonal; similarly, a lower triangular matrix has nonzero elements elements in the principal diagonal and below it, but only zeros above the diagonal. The transpose A^T of a matrix A is the matrix which is obtained from it by replacing each row by the corresponding column and vice versa. The inverse of a matrix A^{-1} is the matrix which when multiplied by the original matrix A gives the unit matrix I, that is:

$$A\cdot A^{-1}=A^{-1}\cdot A=I \tag{31}$$

A matrix will only possess an inverse if it is square and nonsingular, that is, if its determinant is not equal to zero. The transpose of the inverse of a matrix is referred to as the reciprocal matrix. A matrix is said to be orthogonal if its inverse is equal to its transpose, that is:

$$A^T=A^{-1} \tag{32a}$$

which is equivalent to:

$$C = A \cdot A^T = I \tag{32b}$$

and to:

$$c_{ij} = \sum_k a_{ik} a_{jk} = \delta_{ij} \tag{32c}$$

The individual rows and columns of a matrix may be considered as row vectors. Thus, the row vector which consists of a single row is really a matrix of size 1 by n, whereas the column vector which consists of a single column is a matrix of size m by 1. Two compatible vectors can be combined to give either an inner product or an outer product. This is illustrated next for a vector and its transpose.

The transpose of a row vector will be a column vector and vice versa. Consider a vector a which has n rows and one column; its transpose a^T will have one row and n columns. If we premultiply a by a^T we obtain:

$$a^T a = [a_1, a_2 \ldots\ldots a_n] \begin{bmatrix} a_1 \\ a_2 \\ \cdot\cdot \\ \cdot\cdot \\ a_n \end{bmatrix} \tag{33a}$$

$$= a_1^2 + a_2^2 + \ldots\ldots a_n^2 \tag{33b}$$

$$= \sum_i a_i^2 \tag{33c}$$

so that the result of the multiplication is a one by one matrix, that is, a scalar. This is known as the *inner product*. The *outer product* is obtained by post-multiplying a by a^T:

$$a \cdot a^T = \begin{bmatrix} a_1 \\ a_2 \\ \cdot\cdot \\ \cdot\cdot \\ a_n \end{bmatrix} [a_1 a_2 \ldots\ldots a_n] \tag{34a}$$

Since this is the product of an $n \times 1$ matrix and a $1 \times n$ matrix, the result is an $n \times n$ matrix as follows:

$$a \cdot a^T = \begin{bmatrix} a_1^2 & a_1 a_2 & \ldots\ldots & a_1 a_n \\ a_2 a_1 & a_2^2 & \ldots\ldots & a_2 a_n \\ \ldots & \ldots & \ldots & \ldots \\ \ldots & \ldots & \ldots & \ldots \\ a_n a_1 & a_n a_2 & \ldots\ldots & a_n^2 \end{bmatrix} \tag{34b}$$

The comparison of equations 33 and 34 is a good illustration of the fact that the multiplication of vectors is not commutative.

A set of simultaneous equations is represented in matrix form by:

$$Ax=b \tag{35}$$

where A is the matrix of coefficients, x is the vector of unknowns, and b is the vector of the right-hand sides of the simultaneous equations. If it is required to solve the problem for different sets of values on the right-hand side, the most convenient method is to obtain the inverse of the coefficient matrix and write the solution as:

$$x=A^{-1}b \tag{36}$$

A matrix only has an inverse if it is square and nonsingular; therefore, equation 34 can only be written if the coefficient matrix is square. This is nothing more than the old criterion that the number of equations must be equal to the number of unknowns in order to obtain a direct solution. If, however, only one set of equations is being solved, there are more efficient computational routines. From the point of view of actual computation, a matrix may be nonsingular but may still give rise to difficulty because the equations are ill-conditioned and the matrix is almost singular so that the numerical results may be unreliable. Special computer programs are available for the inversion of matrices and for the solution of simultaneous equations.

Further information on matrices and their use is to be found in publications by Guillemin (*8*), Raven (*20*), Bickley and Thompson (*3*), and Wade (*23*).

Numerical Methods

Because we deal with data and numbers rather than functions, the systems hydrologist must have a firm grasp of numerical methods. Because of the complexity of the systems with which he deals, most of his problems will require a solution on a digital computer. The various stages of the solution of a problem using a computer may be grouped as follows:

(1) Problem identification
(2) Mathematical description
(3) Numerical analysis
(4) Computer program
(5) Program checkout
(6) Production runs
(7) Interpretation

It is outside the scope of these lectures to discuss these various stages. Nevertheless, those interested will be able to follow up any particular topic in the references by Hamming (*9*), Hildebrand (*10*), McCracken and Dorn (*15*),

Ralston (*18*), and Ralston and Wilf (*19*). In addition, a number of the problems at the end of this lecture and at the end of other lectures in the series will give practice in the solution of problems involving numerical methods.

Problems on Mathematics

Orthogonal polynomials and functions

1. Find the Fourier cosine and Fourier sine coefficients for the expansion of a number of the functions of a continuous variable given in Appendix table 1. From these determine the Fourier exponential.

2. Find the coefficients for the expansion of a number of the functions shown in Appendix table 1 in terms of Laguerre functions. Compare the results with those obtained in question 1 and comment on the difference.

3. Find the harmonic coefficients for the expansion of a number of the functions of a discrete variable shown in Appendix table 2. What is the difference between the expansion of a function of a continuous variable by means of a truncated Fourier series and the expansion of the same function by the harmonic analysis of the function of a discrete variable obtained by sampling the function of a continuous variable at the same number of points?

4. Determine the harmonic coefficients for the discrete set of values obtained by sampling one or more of the functions of a continuous variable given in Appendix table 1. What is the effect of the frequency?

5. In the case of a function which is zero outside a certain limited range, what is the relationship between the Fourier exponential coefficient and the moments of the function about the time origin?

Fourier and Laplace Transforms

6. Find the Fourier transform or Laplace transform of a number of the functions given in Appendix in table 1.

7. Show that the explicit form given in either the Laguerre or Hermite polynomials is identical to the Rodriguez form.

8. The impulse response of a given system may be represented by function 11 in Appendix table 1 and the input to the system may be represented by function 12 in Appendix table 1. Find the output from the system (1) by a direct convolution and (2) by means of the Laplace transform.

9. If the rth moment of a function about the origin is given by

$$U_r^1 = K^r \frac{(n+r-1)!}{(n-1)!}$$

and the function is zero for negative time, find the function.

10. Use the Z-transform to find the function obtained when a Meixner polynomial of degree m is convoluted with a Meixner polynomial of degree n.

Differential equations

11. A number of unequal linear reservoirs are cascaded, that is, the outflow from one is the inflow to the next. Write the differential equation for the outflow from the last reservoir in terms of the inflow to the first reservoir and the storage constants of the individual reservoirs. What is the form of the solution to this general equation? What is the form of the result if the linear reservoirs are all equal?

12. The following equation is the impulse response of a given linear system.

$$h(t) = (C_1t+C_2t^2+C_3t^3)\cdot\exp(-t)$$

Draw two alternative arrangements of equal linear storage elements of unit storage delay time which would have the same impulse response as the given system. Then derive the differential equation for the response $y(t)$ of the given system to any given inflow $x(t)$.

13. Find the solution of the following equation

$$t\frac{dy}{dt}+\left(\frac{t}{k}-n\right)y=0$$

Does the result hold for all values of n? What is the relationship between this result and the result obtained in question 11 for n equal linear reservoirs?

14. Solve the linear wave equation for a semi-infinite channel for zero initial conditions and a given condition at the upstream end. What would be the solution if only the first-order terms on the right-hand side of the equation were retained? What would be the solution if only the second-order terms on the left-hand side of the equation were retained? What type of flow is represented by these two solutions?

15. If in the linear wave equation the value of b and c are zero or of such magnitude that the second and third terms can be neglected, what form does the equation take, and what is the solution for the boundary conditions given in problem 14? How does the form of this solution differ from the solutions found in problem 14?

Matrix methods

16. Write out the set of simultaneous equations relating the ordinates of the outflow hydrograph to the ordinates of the input hydrograph and the unit hydrograph. Express this set of equations in matrix form in two alternative ways. Give the matrix formulation of the direct solution and the least squares solution for the unit hydrograph ordinates.

17. If the volumes of effective rainfall are given by function 6 in Appendix table 2 and the ordinates of the unit hydrograph by function 8 in Appendix table 2, use the matrix formulation to write down the ordinates of the outflow

hydrograph. Rework the problem with the volume of the unit hydrograph made equal to unity.

18. What maximum runoff would be predicted for the effective rain and the unit hydrograph shown in Appendix table 3.

19. The input to a linear system is given by function 3 on Appendix table 2 and the output from the system is given by function 4 in Appendix table 2. Find the pulse response of the system by means of matrix inversion.

20. If the output of the system in problem 19 was taken as function 5 in Appendix table 2, find the pulse response indicated by this output both by the ordinary matrix method and by the least squares method.

Numerical methods

21. List several methods for numerical quadrature of a given function. Draw a flow diagram for the application of one of these methods to the quadrature of one of the continuous functions on Appendix table 1, using either a desk calculator or a digital computer. Give reasons for chosing the particular quadrature method.

22. Develop a flow chart for a general computer program for determining the coefficients in any orthogonal expansion of any given function. Write the computer program for a section of the flow chart.

23. Write a computer program for matrix inversion and apply it to the solution of problem 19.

24. Develop a flow chart for the derivation of a unit hydrograph from records of total rainfall and total runoff. Write one section of the computer program.

25. Discuss the methods available for the numerical solution of the linear wave equation. Write out the finite difference scheme for solving the equation by one of these methods and discuss how the boundary conditions would be handled. What problems would you expect to encounter in computing according to the chosen method?

Literature Cited

(1) Abramowitz, M., and Stegun, I. A., ed.
1964. HANDBOOK OF MATHEMATICAL FUNCTIONS. U.S. Natl. Bur. Standards, Appl. Math. Series 55, 1046 pp.

(2) Aseltine, J. A.
1958. TRANSFORM METHODS IN LINEAR SYSTEMS ANALYSIS. 300 pp., illus. New York.

(3) Bickley, W. G., and Thompson, W. A.
1964. MATRICES: THEIR MEANING AND MANIPULATION. 168 pp. New York.

(4) Doetsch, G.
1961. GUIDE TO THE APPLICATIONS OF LAPLACE TRANSFORMS. 255 pp. New York.

(5) Erdelyi, A., ed.
1954. TABLES OF INTEGRAL TRANSFORMS. V. 1. New York.

(6) FODOR, G.
1965. LAPLACE TRANSFORMS IN ENGINEERING. Hungarian Acad. Sci. Budapest.
(7) FOX, L.
1962. NUMERICAL SOLUTION OF ORDINARY AND PARTIAL DIFFERENTIAL EQUATIONS. 509 pp. Oxford, England.
(8) GULLEMIN, E. A.
1949. THE MATHEMATICS OF CIRCUIT ANALYSIS. 590 pp., illus. Cambridge, Mass.
(9) HAMMING, R. W.
1962. NUMERICAL METHODS FOR SCIENTISTS AND ENGINEERS. 411 pp. New York.
(10) HILDEBRAND, F. B.
1956. INTRODUCTION TO NUMERICAL ANALYSIS. 511 pp. New York.
(11) JURY, E. I.
1964. THEORY AND APPLICATION OF THE Z-TRANSFORM METHOD. 330 pp. New York.
(12) KORN, G. A., and KORN, T. M.
1961. MATHEMATICAL HANDBOOK FOR SCIENTISTS AND ENGINEERS. 943 pp., illus. New York.
(13) LAMBE, C. G., and TRANTER, C. J.
1961. DIFFERENTIAL EQUATIONS FOR ENGINEERS AND SCIENTISTS. 372 pp. London.
(14) LANCZOS, C.
1957. APPLIED ANALYSIS. 539 pp. Pitman, London.
(15) MCCRACKEN, D. D., and DORN, W. S.
1964. NUMERICAL METHODS AND FORTRAN PROGRAMMING. 457 pp. New York.
(16) PAPOULIS, A.
1962. THE FOURIER INTEGRAL AND ITS APPLICATION. 327 pp. New York.
(17) RAINVILLE, E. D.
1960. SPECIAL FUNCTIONS. 365 pp. New York.
(18) RALSTON, A.
1965. A FIRST COURSE IN NUMERICAL ANALYSIS. 578 pp. New York.
(19) RALSTON, A., and WILF, H. S.
1960. MATHEMATICAL METHODS FOR DIGITAL COMPUTERS. V. 1, 293 pp. New York.
(20) RAVEN, F. H.
1966. MATHEMATICS OF ENGINEERING SYSTEMS. 524 pp. New York.
(21) ROBERTS, G. E., and KAUFMAN, H.
1966. TABLE OF LAPLACE TRANSFORMS. 365 pp., illus. Philadelphia.
(22) SNEDDON, I. A.
1957. ELEMENTS OF PARTIAL DIFFERENTIAL EQUATIONS. 327 pp. New York.
(23) WADE, T. L.
1951. THE ALGEBRA OF VECTORS AND MATRICES. 189 pp. Reading, Mass.

LECTURE 4: CLASSICAL METHODS OF RUNOFF PREDICTION

The Outflow Hydrograph

The purpose of lecture 4 is to review the classical methods of runoff prediction as used by applied hydrologists and to reformulate these methods in systems terms. Most of the methods were derived during the golden age of classical hydrology between 1930 and 1945. When some of these methods are looked at from a systematic point of view, the assumptions stand out more clearly, and both the limitations and the full range of applicability of the methods are revealed. In many cases, the scope of the methods is considerably wider than would appear from the classical formulation of the method.

Classical hydrology paid a great deal of attention to the runoff hydrograph in an effort to determine how it could be predicted. Figure 4–1 is taken from a contribution by Hoyt (*18*). He talks of five phases in the runoff cycle; four of these are illustrated in figures 4–1 to 4–4. The first phase relates to the end of a dry period when the streamflow is relatively low, most of it being supplied by base flow (Q_b) from ground water storage. During this phase, the soil moisture will have been reduced by evaporation (E) and transpiration (T) so that a substantial field moisture deficit will exist. If the dry period has been very long, the rate of transpiration may be severely reduced below the potential rate due to the drying out of the soil and the lowering of the water table. Phase 2 of Hoyt's runoff cycle relates to an initial period of rain and is shown on figure 4–2. If the initial rain (P) is light, the amount infiltrated (F) will not be sufficient to make up the field moisture deficit and hence, no recharge to ground water (R) will occur. During this second phase, a portion of the rain will be intercepted by vegetation (V) or stored in depression storage (D).

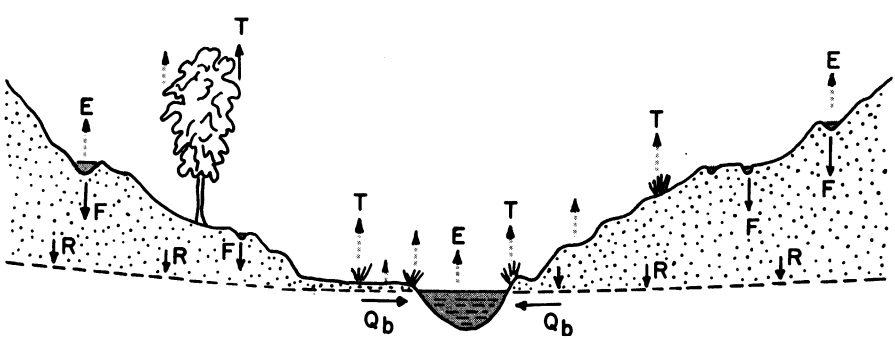

FIGURE 4–1.—Phase of low streamflow.

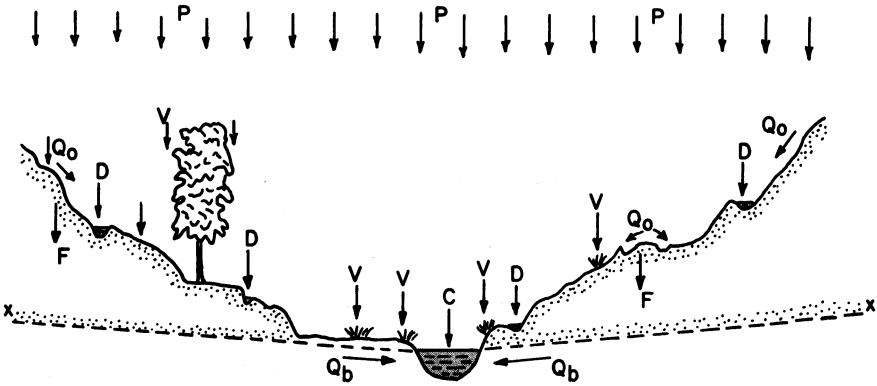

FIGURE 4–2.—Phase of initial rainfall.

The third phase, shown in figure 4–3, is associated with the continuation of rain for some time. If this occurs, the storage in the surface depressions (D) will be satisfied and overland flow (Q_o) will occur; similarly, if the infiltration into the soil is sufficient to fill the soil moisture storage (S), then recharge (R) to the ground water will occur. The streamflow will rise relatively rapidly due to overland flow (Q_o) and any return of interflow (Q_i) to the stream. Subsequently, there will be a more gradual increase in streamflow due to outflow from the ground water reservoir (Q_b), which is being recharged by gravitational soil water (R). When the general conditions are favorable to rainfall, there is a high relative humidity and both evaporation and transpiration tend to be reduced. In the analysis of conditions during prolonged rainfall, evaporation and transpiration are frequently neglected. In this third

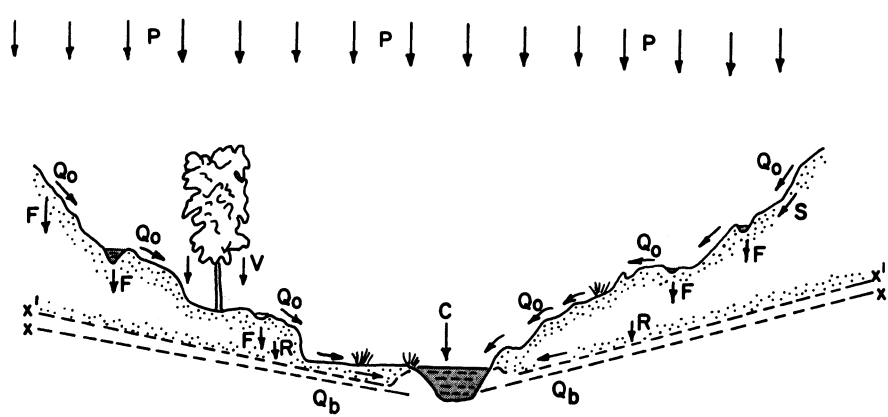

FIGURE 4–3.—Phase of prolonged rainfall.

phase, the rapid rise of the level in the stream channels due to overland flow and interflow may result in increased bank storage, that is, a recharge of the ground water close to the stream as a result of the increased streamflow.

Hoyt characterized the fourth phase as a period when rainfall has continued sufficiently long and with sufficient intensity so that all available natural storage has been satisfied. This condition rarely occurs in natural watersheds of any appreciable size. In the case of small watersheds, both urban and rural, the storage may be satisfied and the condition reached where the rate of runoff is equal to the supply rate. This phase is not separately illustrated but is similar to the third phase shown in figure 4–3.

The fifth phase described by Hoyt is illustrated in figure 4–4. It is the condition when the rain has ceased, but sufficient time has not elapsed for channel storage and surface retention to be depleted to the level at which they were during the first phase. During this fifth phase, evaporation (E) and transpiration (T) may be considerable because the plentiful supply of moisture allows evaporation to take place at almost the potential rate. Streamflow will decline but only gradually as surface storage, channel storage, and ground water storage are drawn upon in turn. This fifth phase is illustrated on the last line of figure 4–4.

We might argue about the details of this particular picture of the runoff cycle, but not about its general nature. How does this picture compare with the systems view of the same phenomena? Can Hoyt's approach interpreted from a systems point of view? At first glance there seems little in common between the classical picture of figure 4–1 to 4–4 and the systems diagram shown in figure 1–8 (p. 16). On closer examination, however, we realize that the two can be related to one another. In figures 4–1 to 4–4, the channel storage and the storage in the soil above the water table are shown pictorially; in figure 1–8 the same storages are represented by rectangular boxes. Hoyt's classification and illustration of the phases of the runoff cycle are based on two inputs,

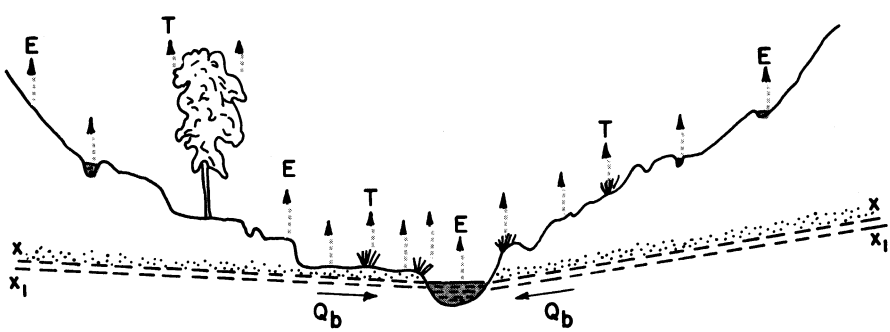

FIGURE 4–4.—Phase of declining streamflow.

one of precipitation and the other of potential evaporation and transpiration; these are also the essential inputs of figure 1–8.

Classical hydrology, as exemplified by Hoyt's analysis of the runoff cycle, makes the assumption that there is either rainfall and no transpiration, or else transpiration and no rainfall. If this assumption is permitted in systems hydrology, as in classical hydrology, then the task of the systems hydrologist is greatly simplified. Instead of dealing with multiple inputs, it is possible to deal with alternating inputs; thus we might consider the precipitation and the potential evaporation for a given catchment as analogous to controls on a storage tank operated in such a way that when one valve is open, the other is shut and vice versa. While a complete model would have to take care of simultaneous multiple inputs, the first approximation could follow the classification of Hoyt.

In the systems formulation, it is only necessary to use two phases. The first phase would be the rainless period. The initial storage in the different parts of the watershed would be determined by the previous history of the system. The variation in that storage would be determined by the natural recession of storage plus the effect of potential evapotranspiration on the soil moisture. The second phase would be the rainy period. The initial condition would be set by the history of the system during the previous rainless period in which evaporation and transpiration would be neglected leaving precipitation as the only input.

The decomposition of the total hydrograph into components is shown in figure 4–5, which is based on a figure by Linsley, Kohler, and Paulhus (*25*). In figure 4–5, the total hydrograph has been drawn on semilog paper. The ground water recession is taken to be exponential, thus giving a straight line on this plot. The exponential recession is continued back from A to B, and B is then joined to the start of the rise of the hydrograph. When the assumed ground water flow is subtracted from the total hydrograph, the hydrograph of surface runoff plus interflow plotted in figure 4–6 is obtained.

Again the straight line recession may be extended back from C to D, and the interflow separated out leaving the surface runoff. Thus, the total hydrograph has been divided into three elements—ground water flow, interflow, and surface runoff—each of which is plotted as a triangle on semilog paper. This figure is reproduced here as an illustration of a particular concept of the components of the hydrograph without any comment on the extent to which it reflects the position in most natural hydrographs. Whether we approach the problem of runoff prediction from a classical or a systems viewpoint, it is necessary to make some assumptions as a basis for the runoff prediction. The division of the runoff cycle into phases and the division of the runoff hydrograph into the three components described above are examples of such assumptions.

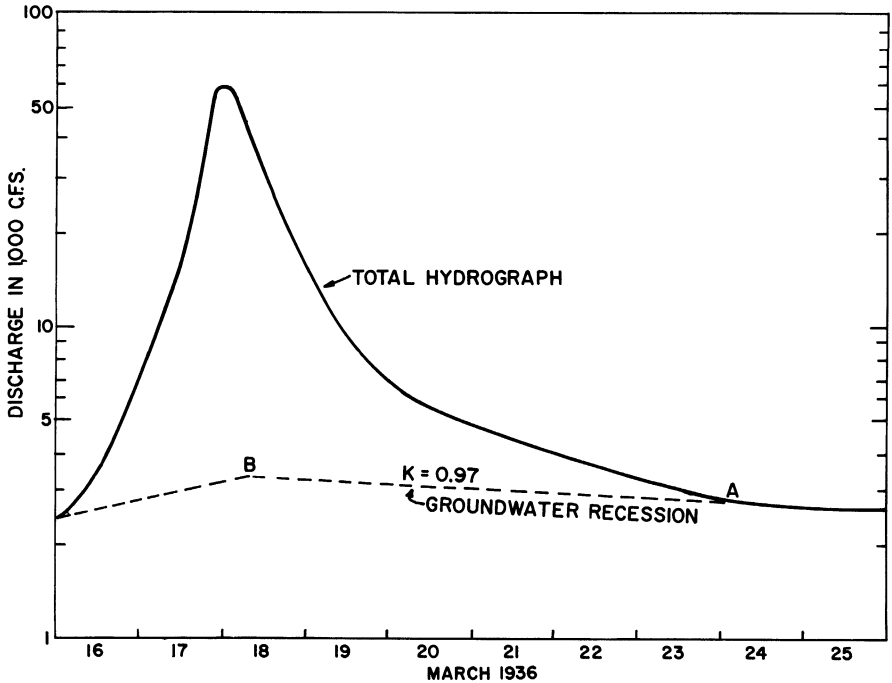

FIGURE 4–5.—Hydrograph of total flow.

The Rational Method

During the latter part of the 19th century and earlier part of the 20th century runoff was predicted in one of two ways. Most engineers used empirical formulas which were derived for particular cases and then applied to other cases on the assumption that conditions were similar enough for the predictions to be of some value. The second method used was that which has come to be known as the "rational method." In this review there is little need to examine the empirical formulas as they were ad hoc models whose parameters were derived for one particular case and then used in a wider context. The rational method, however, was essentially a procedure and, as its name implies, was an attempt to approach the problem of runoff prediction rationally. The assumptions which it made were unduly restrictive but, nevertheless, it is interesting to discuss this approach here as it was the one which lead ultimately to the development of some important methods in classical and modern hydrology.

Though the rational method is often dated from the papers of Kuichling

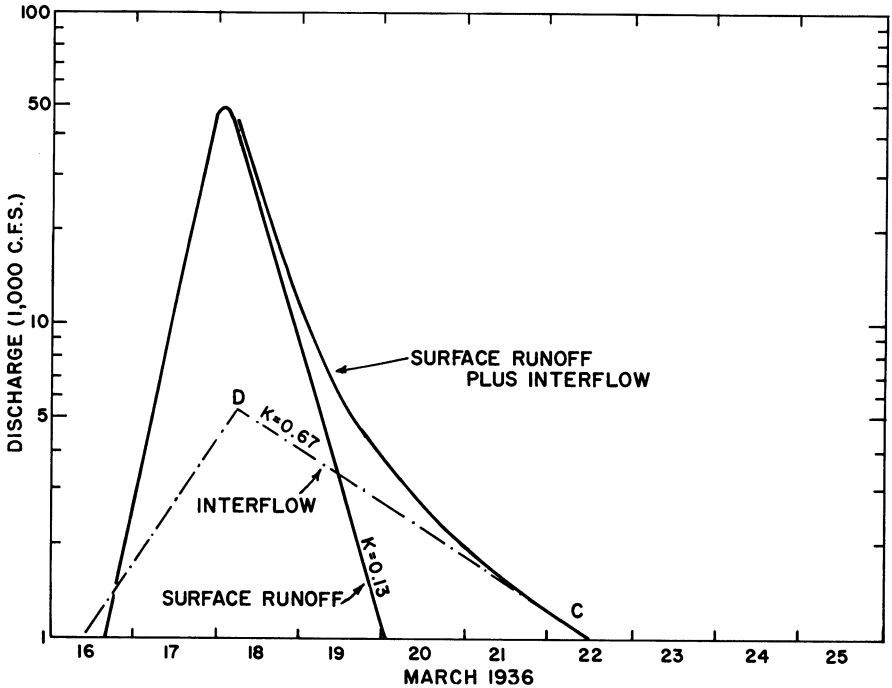

FIGURE 4–6.—Surface runoff plus interflow.

(*23*) and Lloyd-Davies (*26*), the method is clearly outlined in a paper by Mulvaney (*28*) presented to the Institution of Civil Engineers of Ireland in 1851. In this paper, Mulvany gives a clear exposition of the concept of the time of concentration and its relation to the maximum runoff in the following terms:

> The first matter of importance to be ascertained in the case of a small or mountainy catchment is *the time* which a flood requires to attain its maximum height, during the continuance of a *uniform rate of fall* of rain. This may be assumed to be the time necessary for the rain which falls on the most remote portion of the catchment to travel to the outlet, for it appears to me that the discharge must be greatest when the supply from every portion of the catchment arrives simultaneously at the point of discharge supposing, as above premised, the *rate* of supply to remain constant, and this length of time being ascertained, we may assume that the discharge will be the *greatest possible* under the circumstances of a fall of rain occurring, of the maximum uniform rate of fall for that time.

Mulvany then cites the example of a catchment with a time of concentration of 3 hours. He points out that 1 inch of rain falling in 3 hours on such a catchment would give a greater flow than 2 inches of rain falling in 24 hours. He goes on to discuss the factors which affect the time of concentration as

follows:

> This question of time as regards any catchment, must depend chiefly on the extent, form and rate of inclination of its surface; and therefore one great object for investigation is the relation between these causes and their effect; so that, having ascertained the extent, form and average inclination of any catchment, we may be able to determine in the first place, the *duration of constant rain* required to produce a maximum discharge, and consequently to fix upon the *maximum rate* of rainfall applicable to the case. It is evident that, as a space of time is reduced, the rate of maximum rate of rain is increased.

Mulvany was concerned with the maximum rate of runoff and that he assumed a constant rate of rainfall. The circumstances of the development of the rational method have been described elsewhere by Dooge (*11*).

The original rational method which was used to predict the maximum runoff was modified in the 1920's to allow for nonuniform intensities of rainfall during the storm and also to allow for irregularities in the shape of the catchment. The first proposal for adapting the classical rational method to take account of variations of rainfall within the storm period appears to have been that by Hawken and Ross (*15*, *37*). A few years later, a second variation was introduced to overcome the defect in the original rational method that—in certain irregular shapes of catchment encountered in the design of sewerage schemes—the predicted discharge from a part of the catchment could be greater than the predicted discharge from the whole of the catchment. The first modification of this type appears to be that due to Reid (*34*) in 1926.

Methods of handling the nonuniform rainfall can also be studied in papers by Rousculp (*38*), Coleman and Johnson (*8*), Judson (*21*), Ormsby (*33*), Harte (*14*), and Laurenson (*25*). The method of allowing for a higher runoff from a partial area depends on the type of rainfall formula used. The methods are described in papers by Riley (*35*), Escritt (*13*), and Munro (*29*). Some of these methods for allowing for the nonuniformity of rainfall and irregularity of area are discussed in somewhat more detail in lecture 8, (see "Time-Area Methods"), where they are related to the process of deriving synthetic unit hydrographs. In both of these lines of development, use was made of a time-area diagram, which indicates the distribution of the time of travel from different parts of the catchment.

Figure 4–7 *top* shows a watershed on which have been drawn isochrones of equal travel time. Thus, each point on the isochrone labeled $\tau = 4$ has a travel time of 4 hours, that is, it takes 4 hours for water to travel from any point on that isochrone to the outlet. If a detailed survey of the catchment is available, the position of the isochrones can be estimated by making allowance for the time of overland flow to a channel and then calculating the time of flow in the channel by Manning's formula or by some similar method.

If the area of that part of the catchment whose time of travel is less than or equal to a given value of τ, is plotted against that value of τ, we obtain a time-area diagram as shown in figure 4-7, *bottom left*. According to the rational

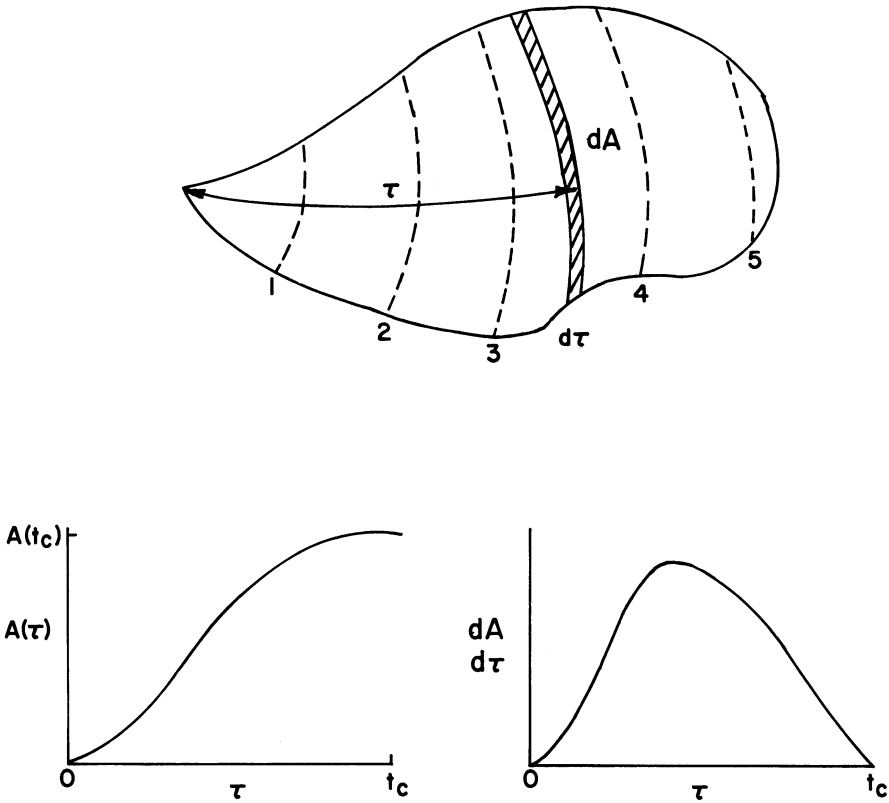

FIGURE 4–7.—*Top*: Isochromes of travel time. *Bottom*: *Left*, time-area curve; *right*, time-area-concentration curve.

method, this diagram shows for any value of τ, the area which will contribute to the maximum flow at the outlet due to rainfall with a duration equal to τ. Often it is more convenient to use the time-area-concentration curve shown on figure 4–7, *bottom right*. The latter is the derivative of the time-area curve, and its base length is equal to the time of concentration (t_c). The time-area-concentration curve in the modified rational method corresponds to the instantaneous unit hydrograph (IUH) in the unit hydrograph method (*30*).

In applying the modified rational method, the maximum rate of runoff was obtained by superimposing the cumulative rainfall pattern (or the rainfall intensity pattern) and the time-area diagram (or the time-area-concentration curve). To facilitate comparison, the time scales on the two diagrams were made the same but with the time scale on the time-area diagram reading from left to right and the time scale of the storm rainfall curve reading from right to left. When the time-are-concentration curve and the rainfall intensity curves were used, the maximum runoff was obtained by superimposing the maximum rainfall intensity over the maximum of the time-area-concentration

curve, then multiplying corresponding ordinates of the two curves, and, finally, summing these products to obtain the maximum runoff. It is easy, in the hindsight of the systems approach, to interpret and describe this graphical and numerical procedure as a convolution of rainfall intensity and the time-area-concentration curve. By sliding one curve laterally over the other, it was possible, in the modified rational method, to obtain ordinates other than the maximum and, with patience, to obtain sufficient points to define a complete hydrograph of runoff (*12*).

In fact, we now realize that these methods developed in the 1920's use the time-area concentration curve as a synthetic unit hydrograph. Before the unit hydrograph had been invented, engineers were deriving synthetic unit hydrographs (or synthetic *S*-hydrographs) in the form of time-area-concentration curves (or time-area diagrams) by using Manning's formula to estimate the time of travel. Because such synthetic unit hydrographs were based purely on translation and did not take account of storage effects (either in the sewerage system or on the ground, in the soil, and in the channel network), it is not surprising that when combined with the true rainfall intensity pattern, they tended to overpredict the peak rate of runoff. It is worthwhile noting that in the original rational method in which a uniform rainfall intensity is assumed, the error due to assuming uniform rainfall intensity and the error due to neglecting storage were opposite in sign. Thus, the predicted peak would not be as great as in the modified rational method and might in fact be closer to the true peak.

Those who used empirical formulas for the time of concentration were also using a synthetic method; this time one based on empirical relationships between this particular parameter and the watershed characteristics. The rational method is still quite properly used in certain routine design problems such as small roadway culverts.

The rational method may be considered as a parametric method in which a simple model is used. The basic formula of the rational method is given by:

$$Q_{\max} = C \cdot i(t_c) \cdot A \tag{1}$$

in which $Q_{\max}$ is the estimated peak discharge, C is a coefficient whose value must be determined in some way, $i(t_c)$ is the intensity of rainfall of the chosen frequency for a duration equal to the time of concentration (t_c), and A is the area of the catchment. In a recent publication, Nash (*31*) pointed out that the rational method might have been developed on the basis of parameter optimization. In this case, the data would have been examined to determine the values of C and t_c which gave the optimum fit in some defined sense. To do so for a reliable set of data would be an interesting exercise.

Because these lectures are concerned with parametric hydrology, we have only discussed the application of the rational method to the prediction of individual storm events. Equation 1 can also be taken in a statistical sense

in which C represents the ratio of the peak rate of runoff of a given frequency to the rainfall of the same frequency and a duration equal to the time of concentration. The use of the rational method in this way is outside the scope of the present lectures, in which we are largely concerned with the rational method as a forerunner of unit hydrograph procedures.

Unit Hydrograph Concepts

The unit hydrograph concept and its development was one of the highlights of the classical period of hydrology. Figure 4–8 reproduces figure 1 of Sherman's basic paper (*40*) published in 1932. In this figure, Sherman illustrated for the case of a triangular unit hydrograph the effect of rain during successive standard periods in building up the shape of the surface runoff hydrograph through the superposition of displaced triangular unit hydrographs, which combine to give the total runoff hydrograph. If the duration of effective precipitation is greater than the base of the unit hydrograph, the runoff becomes constant. For about 25 years, unit hydrograph methods were widely used in applied hydrology without a recognition of the essential assumption involved, namely that the relationship between rainfall excess and surface runoff was that of a linear time-invariant system.

It is instructive to quote a classical formulation of unit hydrograph pro-

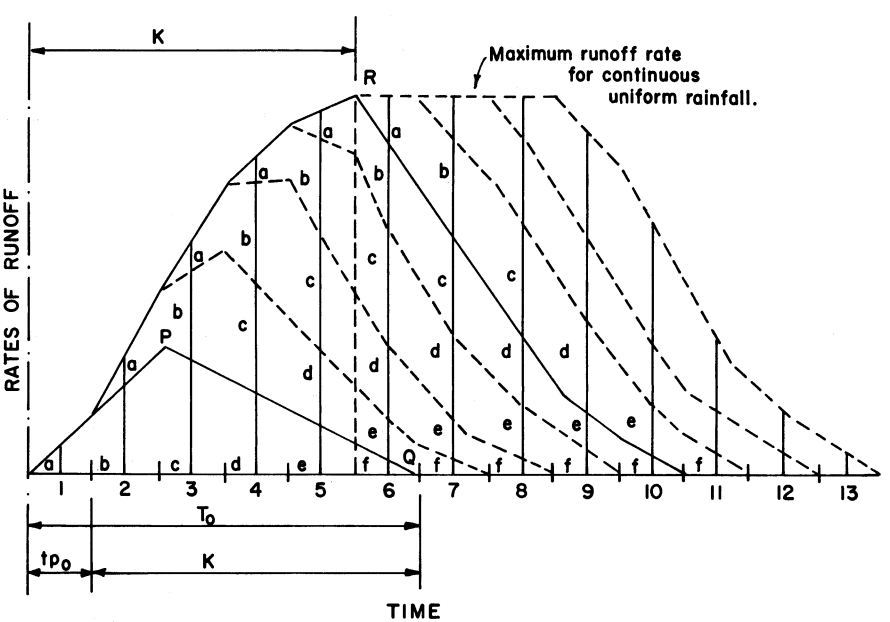

FIGURE 4–8.—Superposition of unit hydrographs.

cedures and to compare this with the systems formulation of the same basic idea. One of the best classical discussions of unit hydrograph procedures is that given in "Elements of Applied Hydrology" by Johnstone and Cross (*20*). They state the basic propositions of the unit hydrograph as follows:

> We are now in a position to state the three basic propositions of unit*graph* theory, all of which refer solely to the surface-runoff hydrograph:
>
> I. For a given drainage basin, the duration of surface runoff is essentially constant for all uniform-intensity storms of the same length, regardless of differences in the total volume of the surface runoff.
>
> II. For a given drainage basin two uniform-intensity storms of the same length produce different total volumes of surface runoff, then the rates of surface runoff at corresponding times t, after the beginning of two storms, are in the same proportion to each other as the total volumes of the surface runoff.
>
> III. The time distribution of surface runoff from a given storm period is independent of concurrent runoff from antecedent storm periods.

The classical statement of unit hydrograph theory quoted above can be summarized in six words: The system is linear and time-invariant. Proposition I and proposition II together make up the property of proportionality. If, the length of input remains constant but the volume of input increases, then the base length of the outflow is not altered, but the ordinates of the outflow are raised in proportion to the volume of input. Proposition III is the principle of superposition, which allows us to decompose the input into separate parts and then superimpose on one another the separate outputs to obtain the total output.

The classical manner of stating the unit hydrograph concepts and properties was not questioned until about 1955. Nowadays, we make the assumption that the watershed, in converting precipitation excess to direct storm runoff, acts as a linear time-invariant system. It is interesting to note the comments which Johnstone and Cross (*20*) make following their outlining of the three basic propositions:

> All these propositions are empirical. It is not possible to prove them mathematically. In fact, it is a rather simple matter to demonstrate by rational hydraulic analysis that not a single one of them is mathematically accurate. Fortunately, nature is not aware of this.

In this regard our position has not changed. We are aware that the assumptions of linearity and time-invariance for a catchment system are not strictly correct, but we are content to adopt them as long as they are useful. We can look at the fundamental equations of open channel flow and show that they are nonlinear; we can look at laboratory results which show that the runoff from model watersheds is nonlinear; we can look at field results and demonstrate their nonlinearity. Nevertheless, we cling to the assumption of linear operation. The reasons are that linear methods are relatively simple, are by far the best-developed methods we have, and that the results obtained by using these linear methods are acceptable for engineering purposes. We will

continue to use them until such time as workable nonlinear methods are developed and that are more accurate without being unduly complex or costly.

The original unit hydrograph developed by Sherman was a continuous hydrograph of runoff due to uniform rainfall in unit period. Later, Bernard (*4*) introduced the idea of a distribution graph in which runoff is expressed, usually as a percentage, in terms of volumes of runoff in standard periods. Where the flow is subsequently routed through reservoir storage or channel storage, it may be convenient to use a distribution graph rather than a unit hydrograph.

The *S*-hydrograph, or *S*-curve, is defined as the hydrograph of surface runoff produced by a continuous effective rainfall of 1 inch per hour. If the unit hydrograph has been normalized to unit volume, then the *D*-hour unit hydrograph corresponds to rain falling at a rate of $1/D$ inches per hour for D hours. For a rate of 1 inch per hour lasting for D hours, the ordinates of the *D*-hour unit hydrograph have to be multiplied by D. In the *S*-hydrograph, there are D inches in the first unit period of D hours, D inches in the second unit period, D inches in the third unit period, and so on. The equation of the *S*-hydrograph is, therefore given by:

$$S(t)=D\sum_{i=0}^{n} h_D(t-iD) \quad \text{for} \quad nD<t<(n+1)D \tag{2}$$

One of the big advances in classical unit hydrograph theory was the discovery that the *S*-hydrograph could be used to convert a unit hydrograph from one unit duration to another. Before this, it was necessary to find a storm of the appropriate duration to derive the required unit hydrograph from the data. If you wanted a 6-hour unit hydrograph, you had to find a 6-hour storm, or a storm whose duration was an even submultiple of 6 hours so that the shorter unit hydrograph could be developed and then shifted and superimposed to give a 6-hour unit hydrograph. Figure 4–9 shows the classical diagram of the relationship between the *S*-hydrograph and the unit hydrograph. Once the *S*-hydrograph has been obtained from any unit hydrograph, a unit hydrograph of a new given period can be derived from it by displacing the *S*-curve by the required amount, subtracting the ordinates of the two *S*-curves, and normalizing the volume. This process can be represented by the equation:

$$h_D(t)=\frac{S(t)-S(t-D)}{D} \tag{3}$$

As D becomes smaller and smaller, the process represented by the above equation comes closer and closer to the definition of differentiation, and in

the limit we have:

$$h_o(t) = \frac{d}{dt}[S(t)] \tag{4}$$

The hydrograph defined by equation 4 is known as the instantaneous unit hydrograph (IUH). It was developed in hydrology from hydrologic concepts rather than from systems analysis where it was already known under a variety of names, but most commonly as the impulse response (see pages 20 and 25, lecture 1). The main motivation for its derivation in hydrology appears to

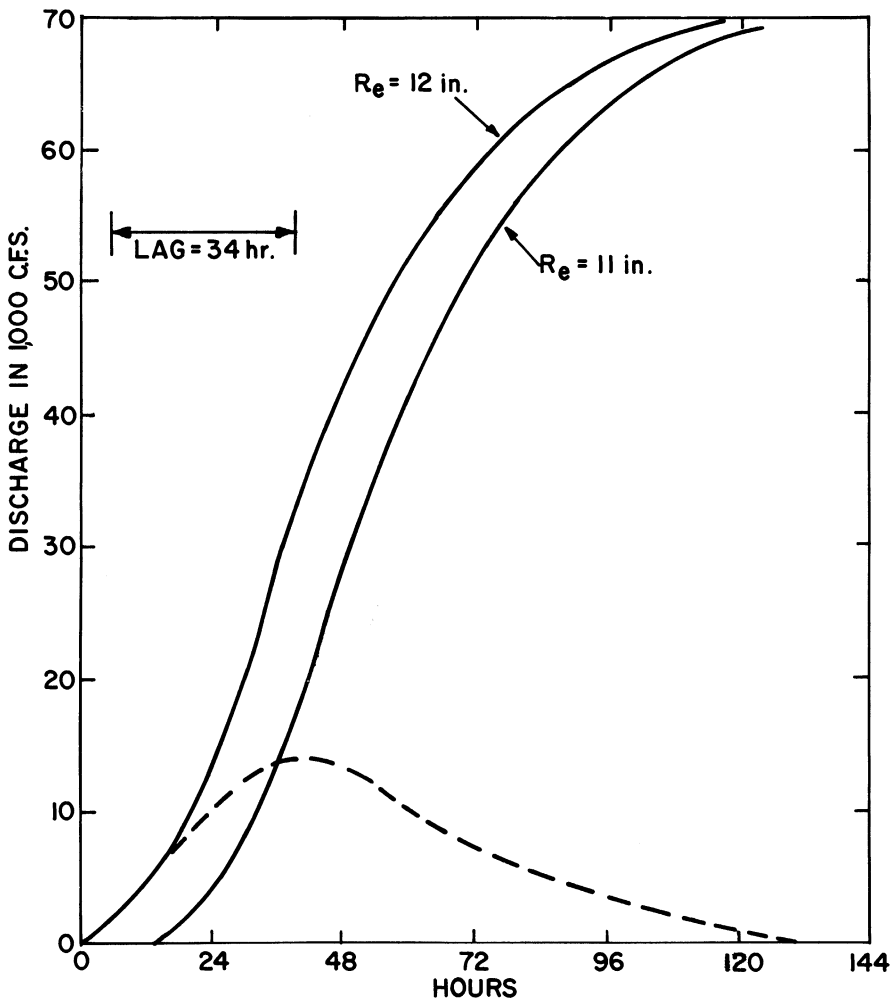

FIGURE 4–9.—Unit hydrograph and S-curve for 1,290-square-mile drainage area.

have been the need to simplify the treatment of synthetic unit hydrographs. For a finite period unit hydrograph, the shape naturally depends on the unit period (D), and it was discovered that for very short durations the changes in shape were quite slight. Some workers in the field suggested going to the limit and using an IUH, thus getting rid of the variable D.

Once the IUH is accurately known, any other finite period unit hydrograph can be obtained through the S-hydrograph. Indeed, the time-to-peak of a finite period unit hydrograph of any given duration can be found directly from the IUH. The peak of the finite period unit hydrograph, given by equation 3, is the time for which the above expression is a maximum. Since the derivative of the S-hydrograph is the IUH $h_o(t)$, then the condition for the maximum ordinate of the finite period unit hydrograph $h_D(t)$ is:

$$h_o(t) - h_o(t-D) = 0 \tag{5}$$

that is, the peak of the finite period unit hydrograph occurs at the time when the ordinate of the IUH is equal to the ordinate at a time D earlier. The ordinate of the finite period unit hydrograph at any time is given by the integral expression:

$$h_D(t) = \frac{1}{D} \int_{t-D}^{t} h_o(t)\, dt \tag{6}$$

Looked at from the viewpoint of classical hydrology, all of these results have to be proved before we are convinced that the IUH can be used to derive any other expression which we wish. From a systems viewpoint, we know from our basic theory that for a linear time-invariant system, the impulse response contains all the necessary information about the behavior of the system.

The process of deriving finite period unit hydrographs from an S-hydrograph is not as easy in practice as it appears on first sight. This is because the S-hydrograph may not be known continuously, but only at certain intervals of time. If we start off with a unit hydrograph which is defined only for 6-hour intervals, the derived S-curve will be defined for the same intervals. We can certainly try to derive the unit hydrograph for a period of 1 hour, 2 hours, or 3 hours from this S-curve, but the results may not have much meaning. If there are inaccuracies in the original unit hydrograph, then there will probably be oscillations in what would be a smooth S-hydrograph. These oscillations may lead to grossly erroneous ordinates in a second unit hydrograph derived from the S-hydrograph. Though a smooth IUH will always produce a smooth S-hydrograph, there is no guarantee that the S-hydrograph derived from a smooth finite period unit hydrograph will itself be smooth. Some of the problems at the end of this lecture are designed to show the pitfalls in this particular connection. Though hydrologists attribute oscillations in S-curves to measurement and other errors in the data, it is quite possible

for oscillations to arise in S-hydrographs derived from synthetic finite period unit hydrographs which appear physically reasonable.

Separation of Base Flow

The first step in analyzing an actual hydrograph is to separate the base flow from the direct storm runoff. Hydrologic literature abounds with methods for making this separation. The effect of different types of storm event on the hydrograph are shown schematically in figure 4–10 which are due to Horton. Figure 4–10*A* shows the effect of an intense rainfall of short duration. Because of the high intensity there would be surface runoff, but due to the short duration and consequent small volume, the field moisture deficit might not be satisfied, and, thus, there would be no recharge to ground water. Under these conditions, the base flow recession before and after the storm event would follow the same general curve, and the response of the hydrograph would consist of a sharp rise and sharp recession back to the same master curve of base flow recession.

On the other hand, if we have prolonged rainfall of small intensity, we get the condition shown in figure 4-10*B*. In this case, the intensity does not exceed the potential infiltration rate, and, thus, there is no surface runoff. However, the rainfall is sufficiently prolonged to make up the field moisture deficiency and to give a recharge to ground water shortage. The effect of this recharge is to increase the amount of ground water outflow or baseflow, and the recession curve is shifted as shown in a stylized fashion on figure 4–10*B*. In this case, the recession curve after the rainstorm has the same shape as the recession before the rainstorm but is shifted in time. More usually, however, in storms which are of consequence in hydrologic analysis, both of the above effects are combined so that we get both the distinct peak and a measurable amount of surface runoff on the one hand and a recharge of ground water giving a shift in the master recession curve on the other. This mixed condition is shown in figure 4–10*C*. One of the first steps necessary in unit hydrograph analysis is to separate out these two effects.

If during the analysis of a discharge hydrograph, we encounter a storm event of the first type, as shown on figure 4–10*A*, where there is no recharge to ground water, then there is no problem in separating the surface runoff from the baseflow. All that has to be done is to join up the line of recession before and after the storm event and treat all flow above this single master recession curve as surface runoff. In the second case, as shown on figure 4–10*C*, where all the flow is base flow, no difficulty arises because this is not a storm event from the point of view of surface runoff.

For a storm event giving rise to both surface runoff and ground water recharge, some method of separating the two must be applied if the unit hydro-

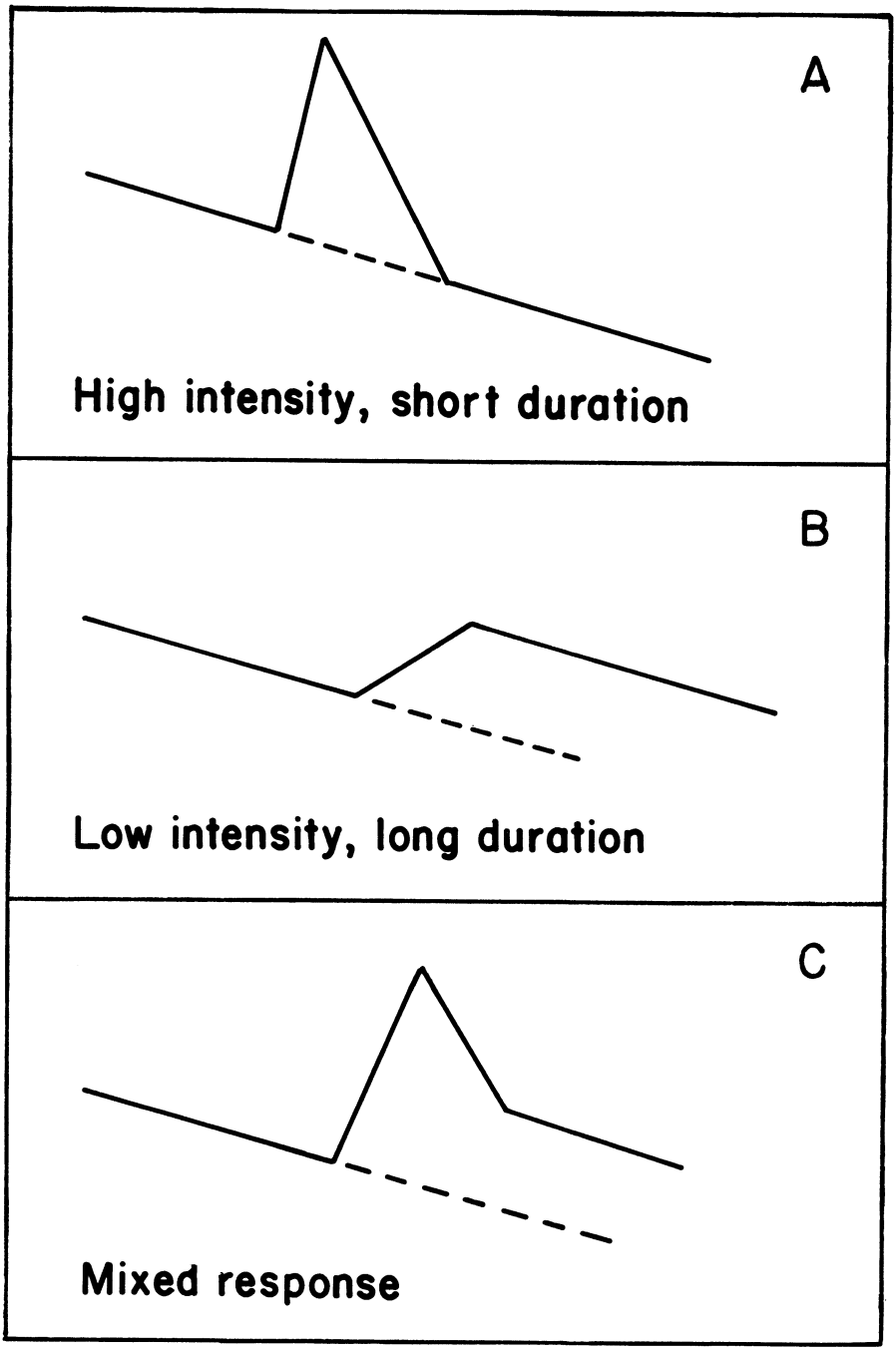

FIGURE 4–10.—Hydrograph response to different types of storm events: *A*, Surface water response; *B*, base flow response; *C*, combined response.

graph of direct runoff is to be derived. The applied hydrologist has quite a wide choice of such separation techniques to draw from in the technical literature, but few of them are soundly based. In these methods, the base flow is separated in some arbitrary fashion and then the total precipitation is adjusted so that the volume of effective precipitation is equal to the volume of direct storm runoff. There is no attempt to link infiltrating rainfall with ground water recharge and hence, with ground water outflow. Transition from the recession curve before the storm event to the recession curve after the storm event is usually taken as being of relatively little interest in applied hydrology, but this is a grave error. In fact, the form of this recession gives us the shape of the ground water unit hydrograph, a concept which has been studiously ignored by applied hydrologists over the past 35 years. If a block diagram is drawn of the procedure described above, it would show an open loop between the infiltration into the soil and the ground water outflow. This would indicate that these two quantities would have to be either separately measured or else connected by a subsystem. In the systems formulation of catchment response, this open loop is closed as shown in figure 1–8 (p. 16).

Most workers in applied hydrology are ready to accept that a good representation of the recession curve can be got by fitting a straight line to the recession part of the hydrograph plotted on semilog paper. This is equivalent to assuming that the ground water reservoir acts as a single linear reservoir. Once this assumption has been made, the maximum benefit should be obtained from it and the further assumption made that the ground water reservoir acts as a single linear reservoir during the recharge as well as during recession. Figure 4–11 shows the application of this approach. The total precipitation is taken as being divided into precipitation excess and a constant rate of infiltration; this represents a ϕ-index approach rather than the use of a more sophisticated infiltration equation. The first part of the infiltration will recharge ground water at a constant rate. The ground water hydrograph will be as shown in figure 4–13. From A to B during the replenishment of field moisture deficit, the base flow will continue to decline as before and we will have:

$$Q = Q_A \exp\left[-\left(\frac{t-t_A}{K}\right)\right] \tag{7}$$

From B to C, the ground water reservoir will operate as a linear reservoir being recharged at a uniform rate (R_o) and the outflow will be:

$$Q = (Q_B - R_o) \exp\left[\frac{-(t-t_B)}{K}\right] + R_o \tag{8}$$

After the cessation of rainfall and an allowance for time of travel through the soil, the recharge to ground water will cease and the recession will be ex-

ponential as before:

$$Q = Q_C \exp\left[\frac{(t-t_C)}{K}\right] \tag{9}$$

The above approach to ground water separation is rational insofar as it is based on a definite model of ground water behavior. As such, it is superior to purely empirical rules usually quoted.

There is little doubt that the actual separation of base flow made in practice in ad hoc hydrologic studies is superior to the separation that would be obtained by a blind application of the rules of thumb and empirical procedures quoted in the textbooks. This is so because the hydrologist is usually familiar with the particular watershed under examination. He modifies these empirical rules to get a commonsense result based on his own sensitivity to hydrologic behavior and his knowledge of the watershed. The trouble is, however, that though the individual separation in ad hoc studies may be reasonably correct, it makes the comparison of results between one watershed and another very difficult when there is a large subjective element in the manner of separating base flow from surface runoff.

In his study of 90 storm events on 48 British catchments, Nash (*32*) proposed a method of base flow separation which, though not founded on any physical principle or model, had the great advantage of both being objective

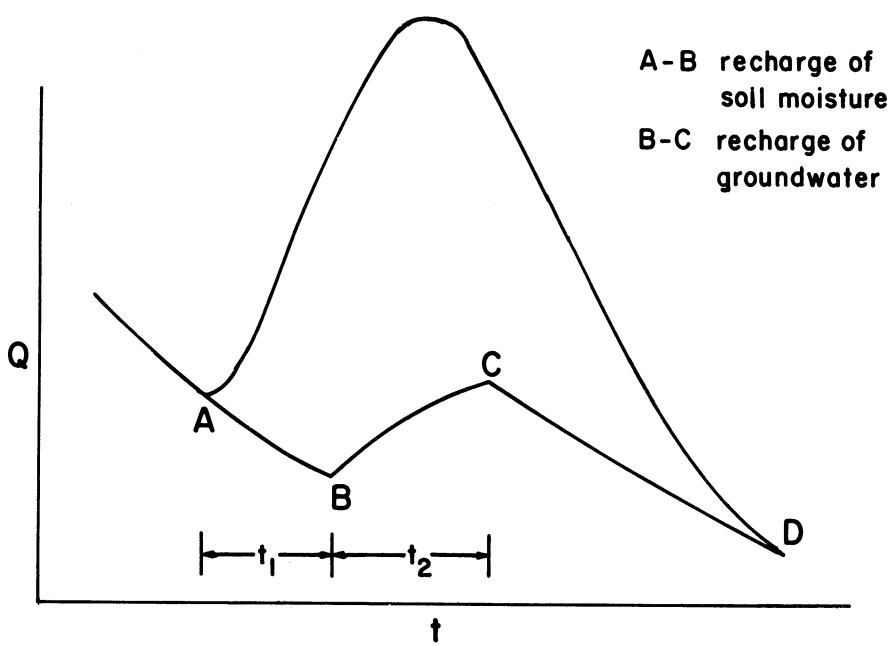

FIGURE 4–11.—Separation of base flow.

and of affording some scope for investigating the effect of the assumption on the results obtained. He proposed separating the base flow by drawing a straight line from the start of the rising portion of the flood hydrograph to a point on the recession such that the time between the end of the effective rain and the point on the recession was equal to three times the lag between the center of effective rain and the center of storm runoff. The point on the recession to which the separation line was drawn could only be determined by trial and error. In effect, Nash's method of separation gives an IUH whose base length is three times its lag.

Analysis of Complex Storms

Leaving aside for the moment the difficulty of ensuring that the base flow separation has been correctly made, we turn to a consideration of the problem of deriving the shape of the unit hydrograph from the surface runoff hydrograph due to a complex pattern of effective precipitation. In the early unit hydrograph studies in the 1930's, the procedure was essentially one of trial and error. This approach has already been referred to in lecture 1 and illustrated on figure 1–9. Without an objective criterion for the acceptance or rejection of a trial unit hydrograph, the subjectivity of such an approach was necessarily very high.

At the end of the 1930's, some less subjective methods were developed, but these still did not have the objectivity required of a really scientific method. In 1939, Collins (*9*) suggested an iterative method in which a trial unit hydrograph is assumed and applied to all periods of rainfall except the maximum. The trial surface runoff hydrograph thus generated is subtracted from the total measured hydrograph to give a net runoff hydrograph, which can be taken as the runoff due to the ignored maximum rainfall in a unit period but which will also contain the errors in outflow due to errors in the trial unit hydrograph. If this net hydrograph is then assumed to be the outflow due only to the maximum rainfall in a unit period and ordinates are adjusted by dividing by the volume of the maximum rainfall, we obtain a second approximation to the shape of the finite period unit hydrograph. This process is repeated until there is no appreciable change in the ordinates of the trial unit hydrograph. Another special method for determining the shape of the unit hydrograph from a complex runoff unit hydrograph is the graphical method described by Sherman (*41*). If consistently applied without modification, methods such as these could be ranked as objective methods of hydrograph derivation since strict application of the method would always give the same result. In practice, they were rarely objective since any anomalies in the derived hydrographs were arbitrarily corrected by the investigator.

In the 1940's, the derivation of the unit hydrograph from complex storms was based on the solution of the set of simultaneous equations giving the ordinates of the finite period unit hydrograph (or volumes of the distribution

graph) and the rainfall volumes in each unit period. These equations, which have already been given in lecture 1 may be written as:

$$y_0 = x_0 h_0 \tag{10a}$$

$$y_1 = x_1 h_0 + x_0 h_1 \tag{10b}$$

$$y_2 = x_2 h_0 + x h_1 + x_0 h_2 \tag{10c}$$

....

....

$$y_m = x_m h_0 + x_{m-1} h_1 + \ldots\ldots \tag{10m}$$

$$y_{m+1} = x_m h_1 + \ldots\ldots \tag{10n}$$

.....

$$y_p = \qquad\qquad x_m h_{p-m} \tag{10p}$$

This set of equations can, of course, be summarized as:

$$y_i = \sum_{k=0}^{k=i} x_k h_{i-k} \tag{11}$$

In the above set of equations, the values of y_0, y_1, ... y_p are assumed to be known, the values of x_0, x_1, ... x_m are known, and the problem is to find the values of h_0, h_1, ... h_{p-m}. From a mathematical viewpoint, this can be done by solving the first equation for h_0; substituting this value in the second equation and solving for h_1; substituting for the value of h_0 and h_1 in the third equation and solving for h_2; and so on until all the unknown values of h are determined. In practice, the existence of errors in the values of the effective precipitation x, or the direct runoff y, will produce errors in the ordinates of the unit hydrograph h. The substitution of an inexact value of h_0 in the second equation will produce an error in h_1, and the substitution of these two erroneous values in the third equation will produce an error in h_2. Under certain circumstances, the error in the values of h, that is, in the ordinates of the unit hydrograph, can grow rapidly and quite unreal values are obtained in the solution for the later ordinates of the unit hydrograph.

Several methods have been proposed to overcome this disadvantage of the above direct algebraic solution by forward substitution. One of these was the method of least squares, whose use is mentioned by Linsley, Kohler, and Paulhus (*25*). The method was developed by Snyder (*42*) in the United States and Body (*5*) in Australia and programed for the digital computer. The least squares method of unit hydrograph derivation will be discussed in greater detail in lecture 6. Another approach to this problem was that of Barnes (*3*). In his approach, any oscillations occurring in the unit hydrograph were eliminated by deriving the unit hydrograph in the reverse order. This is

in line with general experience in numerical methods—a calculation which is unstable in one direction is usually stable if taken in the reverse direction. Barnes further suggested that the estimated effective precipitation should be adjusted until the unit hydrograph obtained in the forward and reverse directions was substantially the same.

Although the derivation of the unit hydrograph from the outflow hydrograph due to a complex storm (that is, the problem of identification) is a difficult one to solve, the prediction of the flow hydrograph due to a complex storm when the unit hydrograph is known is relatively easy. All that is required is the application of each of the volumes of effective precipitation in a unit period to the known finite period unit hydrograph. To obtain the outflow hydrograph, carefully locate each volume of effective precipitation in time and then sum the results. In terms of the set of simultaneous equations 10a to 10p, the problem is simply to determine the left-hand side knowing all the values of x and all the values of h.

Classical hydrology nearly always made use of a finite period unit hydrograph and, therefore, of the superposition of a finite (and usually small) number of block rainfall events. Research workers who are interested in placing the classical unit hydrograph approach on a sounder theoretical basis tended to use the IUH rather than a finite period unit hydrograph. The procedure for prediction is similar in this case except that summation is replaced by integration. The relationship is shown on figure 4–12. In the upper part of the figure, the rainfall falling between the time $\tau+d\tau$ has been shown as shaded. The volume of precipitation represented by this shaded area is $x(\tau)\,d\tau$. If $h(t)$ is the IUH produced by a unit volume of precipitation excess falling in an infinitesimal short time at $t=0$, then the shape of the hydrograph due to the shaded area of precipitation will be the same as the shape of this IUH, but the ordinates must be multiplied by $x(\tau)d\tau$, and the whole hydrograph must be displaced along the time axis by an amount τ. Each element of precipitation excess will produce a similar hydrograph.

Instead of concentrating on the effect of all times in the future of a given element of precipitation excess, we can concentrate on the outflow at a given time and examine how this is made up from contributions from precipitation excess at all times in the past. As seen from figure 4–12, the contribution of the shaded area of effective precipitation to the outflow at a time, t, will be:

$$\delta y(t) = x(\tau)h(t-\tau)\ d\tau \tag{12}$$

Because all elementary areas of precipitation excess whose value of τ is less than t will contribute to the outflow at a time t, we get for the outflow the relationship:

$$y(t) = \int_{-\infty}^{t} x(\tau)h(t-\tau)\ d\tau \tag{13}$$

which is the familiar convolution relationship for a lumped linear time-invari-

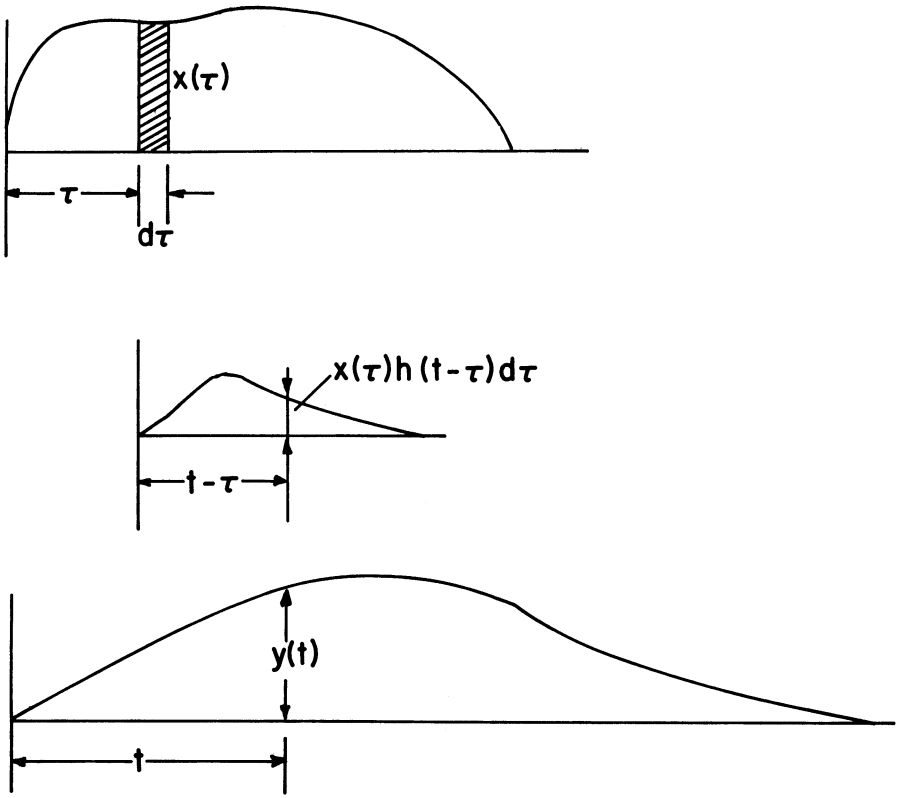

FIGURE 4–12.—Convolution of inflow with IUH.

ant causal system. The above derivation is inherent in the time-area version of the rational method, or isochrone method, as this method is sometimes known. The above physical demonstration parallels the purely mathematical derivation of the convolution relationship given in lecture 1.

In the 1950's, a number of research workers in hydrology, working independently of one another, began to grasp that unit hydrograph methods represented the application in hydrology of systems techniques used in other disciplines. An essential step forward here was the recognition that the unit hydrograph method was merely the assumption that the watershed under examination was converting effective precipitation to storm runoff in a linear time-invariant fashion. The gradual development of the systems formulation of hydrologic problems can be traced in publications by Larriev (*24*), Nash (*30*), Dooge (*10*), Amorocho and Orlob (*2*), Kuchment (*22*), and Roche (*36*). The changes brought about by this new viewpoint can be appreciated

if the references given are compared with the treatment of the corresponding topics given in the number of textbooks on hydrology published in the 1940's by Meinzer (*27*), Foster (*13*), Johnstone and Cross (*20*), Wisler and Brater (*45*), Linsley, Kohler, and Paulhus (*25*), and the American Society of Civil Engineers (*1*).

All of the concepts and methods of the classical unit hydrograph approach can be neatly formulated in systems nomenclature. The only necessary assumptions in the unit hydrograph approach are those of linearity and time-invariance (*10*). Once these assumptions are made, the relation between the input, the output, and the system response are given by the convolution equation. Where the inputs and outputs are defined continuously, the convolution equation takes one of the continuous forms discussed on pages 28 to 35 of lecture 1. The various methods available for the solution of the continuous convolution equation are discussed in detail in lecture 5. If the input and output data are only defined as discrete points, then the unit hydrograph approach can be formulated in terms of the discrete forms of the convolution equation discussed on pages 35 to 40 of lecture 1, and the methods of solution used in these cases are discussed in detail in lecture 6.

Problems on Classical Methods

1. The time-area variations of the rational method enable the complete hydrograph to be predicted for a given storm. What is the relationship between this method and the unit hydrograph method?

2. Table 3 in the Appendix shows the effective rainfall in inches and the runoff in cubic feet per second for the Big Muddy River at Plumfield, Ill., for April and May 1927. Derive the 24-hour unit hydrograph from these figures.

3. The figures defined by function 9 in Appendix table 2 when reduced to unit volume represent the ordinates at hourly intervals of a 2-hour unit hydrograph. (1) Determine the runoff if the volume of effective rain in successive 2-hour periods is given by function 6 in Appendix table 2. (2) Calculate the ordinates of the S-curve and from these derive the ordinates of the 8-hour unit hydrograph. (3) What would be the effect of ignoring the variation of the intensity of effective rainfall in the given storm? (4) Derive the 1-hour unit hydrograph.

4. Carry out the calculations indicated in question 3 for the case where the 2-hour unit hydrograph is defined by a triangle of unit volume whose ordinates at hourly intervals are in the proportion indicated by function 8 in Appendix table 2. Comment on the results obtained.

5. Assume that the hydrograph of effective precipitation is given by function 12 on Appendix table 1 and the hydrograph of storm runoff by function 13 on Appendix table 1. Determine as accurately as possible the form of the IUH.

6. List a number of conventional methods used for separating the base flow and the storm runoff. Compare these methods critically, and give your opinion as to the probable order of merit.

7. An effective rainfall lasting 2 days produces an outflow lasting 6 days. If the daily volumes of outflow are distributed according to function 11 in Appendix table 2, apply Barnes method to determine the distribution graph for the catchment.

8. For the outflow given in problem 7, show that a second unit hydrograph can be derived from the same outflow hydrograph. Is it possible to prove that there are no further exact solutions except these two?

9. (1) For the output obtained in either question 3 or question 4, make a small alteration in one or more ordinates of the output and then seek to derive the unit hydrograph for the original input and the adjusted output. Compare the resulting unit hydrograph with the original unit hydrograph. (2) For the same example, make an adjustment in an ordinate of the input leaving the output unaltered and again proceed to derive a unit hydrograph. Contrast the effects of errors in the input and the output.

10. Derive a matrix formulation for the Collins' method of deriving a unit hydrograph.

Literature Cited

(1) American Society of Civil Engineers.
1949. HYDROLOGY HANDBOOK. Manual of Engin. Pract. No. 28, 184 pp.

(2) Amorocho, J., and Orlob, G. T.
1961. NONLINEAR ANALYSIS OF HYDROLOGIC SYSTEMS. Water Resources Center Contrib. 40. 147 pp., illus. Univ. Calif., Berkeley.

(3) Barnes, B. S.
1959. CONSISTENCY IN UNIT-GRAPHS. Amer. Soc. Civ. Engin. Trans. Jour. Hydraulics Div. 85(HY8): 39–63.

(4) Bernard, M. M.
1935. AN APPROACH TO DETERMINATE STREAMFLOW. Amer. Soc. Civ. Engin. Trans. 100: 347.

(5) Body, D. N.
1959. FLOOD ESTIMATION: UNIT-GRAPH PROCEDURES UTILIZING A HIGH-SPEED DIGITAL COMPUTER. Water Res. Found. Austral. (Sydney) Bul. 4: 41 pp., illus.

(6) Chamier, G.
1897. CAPACITIES REQUIRED FOR CULVERTS AND FLOOD-OPENINGS. Inst. Civ. Engin. Proc. 134: 313.

(7) Chow, Ven Te.
1964. RUNOFF. *In* Ven Te Chow, ed., Handbook of Applied Hydrology. Sec. 14: 54 pp. New York.

(8) Coleman, G. S., and Johnson, A.
1931. RAINFALL RUNOFF. Inst. Munic. County Engin. Jour. 58: 1403.

(9) Collins, W. T.
1939. RUNOFF DISTRIBUTION GRAPHS FROM PRECIPITATION OCCURRING IN MORE THAN ONE TIME UNIT. Civ. Engin. 9(9): 559–561.

(10) DOOGE, J. C. I.
1959. A GENERAL THEORY OF THE UNIT HYDROGRAPH. Jour. Geophys. Res. 64(2): 241–256.

(11) ———
1957. THE RATIONAL METHOD FOR ESTIMATING FLOOD PEAKS. Engineering 184: 311–374. London.

(12) ESCRITT, L. B.
1950. SURFACE WATER SEWERAGE. 200 pp., illus. London.

(13) FOSTER, E. E.
1948. RAINFALL AND RUNOFF. 487 pp. New York.

(14) HARTE, C. A.
1932. Discussion of RAINFALL-RUNOFF CALCULATIONS by M. T. M. Ormsby. Inst. Munic. County Engin. Jour., v. 59, p. 978.

(15) HAWKEN, W. H., and ROSS, C. N.
1921. THE CALCULATION OF FLOOD DISCHARGES BY USE OF A TIME-CONTOUR PLAN. Inst. Engin. Austral. Jour. 2: 85–92.

(16) HOYT, W. G.
1942. AN OUTLINE OF THE RUNOFF CYCLE. Pa. State Coll. Tech. Bul. 27, pp. 57–67.

(17) ——— HARROLD, L. L., and CADY, R. C.
1936. STUDIES OF RELATIONS OF RAINFALL AND RUNOFF IN THE U.S. U.S. Geol. Survey Water-Supply Paper 772, pp. 123–247.

(18) ———
1942. THE RUNOFF CYCLE. *In* Meinzer, O. E., ed., Physics of the Earth-IX: Hydrology. Ch. XId, pp. 507–513. New York.

(19) JENS, S. W.
1948. DRAINAGE OF AIRPORT SURFACES—SOME BASIC DESIGN CONSIDERATIONS. Amer. Soc. Civ. Engin. Trans. 113: 785–809.

(20) JOHNSTONE, D., and CROSS, W. P.
1949. ELEMENTS OF APPLIED HYDROLOGY. 276 pp. New York.

(21) JUDSON, C. C.
1932. RUNOFF CALCULATIONS, A NEW METHOD. Inst. Munic. County Engin. Jour., v. 59, p. 861.

(22) KUCHMENT, L. S.
1964. OBOBSHCHENNAYA FORMOOLA DLYA RASCHETA GIDROGRAFA STOKA [A GENERALIZED FORMULA FOR THE CALCULATION OF A DISCHARGE HYDROGRAPH.] Cent. Forecasting Unit Trans. [Trudy], TsIP No. 113, p. 23. Moscow. NNLST Translation No. 3355. Sept. 1966. Boston Spa, Yorkshire, England.

(23) KUICHLING, EMIL.
1889. THE RELATION BETWEEN THE RAINFALL AND THE DISCHARGE OF SEWERS IN POPULOUS DISTRICTS. Amer. Soc. Civ. Engin. Trans. 20: 1–56.

(24) LARRIEV, J.
1954. CONTRIBUTION A L'ETUDE DES CRUES [CONTRIBUTION TO THE STUDY OF FLOODS]. La. Houille Blanche 6: 725.

(25) LINSLEY, R. K., KOHLER, M. A., and PAULHUS, J. L. H.
1949. APPLIED HYDROLOGY. 689 pp., illus. New York.

(26) LLOYD-DAVIES, D. E.
1906. THE ELIMINATION OF STORM WATER FROM SEWERAGE SYSTEMS. Inst. Civ. Engin. Proc. 164: 41–67. London.

(27) MEINZER, O. E., ed.
1942. PHYSICS OF THE EARTH—IX: HYDROLOGY. 712 pp., illus. New York.

(28) MULVANY, T. J.
1850. ON THE USE OF SELF REGISTERING RAIN AND FLOOD GAUGES. Inst. Civ. Engin. Proc. 4(2): 1–8. Dublin.

(29) MUNRO, C. H.
1956. BASIC THEORY OF URBAN STORM DRAINAGE DESIGN. Inst. Engin. Austral. Jour. 28: 301.

(30) NASH, J. E.
1958. DETERMINING RUNOFF FROM RAINFALL. Inst. Civ. Engin. Proc. 10: 163–184.

(31) ———
1967. THE ROLE OF PARAMETRIC HYDROLOGY. Inst. Water Engin. Jour. 21(5). Dublin.

(32) ———
1960. UNIT HYDROGRAPHS STUDY WITH PARTICULAR REFERENCE TO BRITISH CATCHMENTS. Inst. Civ. Engin. Proc. 17: 249–282.

(33) ORMSBY, M. T. M.
1932. RAINFALL AND RUNOFF CALCULATIONS. Inst. Munic. County Engin. Jour., v. 59, p. 978.

(34) REID, JOHN.
1926. THE ESTIMATION OF STORM-WATER DISCHARGE. Inst. Munic. County Engin. Jour., v. 53, p. 997.

(35) RILEY, D. W.
1931. NOTES ON CALCULATING THE FLOW OF SURFACE WATER IN SEWERS. Inst. Munic. County Engin. Jour., v. 58, p. 1,483.

(36) ROCHE, M.
1965. POINT DE VUE MATRICIEL SUR UN OPERATEUR LINEAIRE DE TRANSFORMATION PLUIES-DEBITS [PRIMARY POINT OF VIEW ON A LINEAR OPERATOR FOR TRANSFORMATION OF RAINFALL INTENSITY]. Proc. Symposium on Representative and Experimental Areas (Budapest). Internatl. Assoc. Sci. Hydrol. Pub. 66 (1): 234–246. Gentbrugge. (In French.)

(37) ROSS, C. N.
1921. THE CALCULATION OF FLOOD DISCHARGES BY THE USE OF A TIME CONTOUR PLAN. Inst. Engin. Austral. Trans. 2: 85.

(38) ROUSCULP, J. A.
1927. RAINFALL-RUNOFF ANALYSIS IN STORM-SEWER DESIGN. Engin. News-Rec. 98: 270.

(39) SHERMAN, L. K.
1932. STREAM FLOW FROM RAINFALL BY THE UNIT-GRAPH METHOD. Engin. News-Rec. 108: 501–505.

(40) ———
1932. THE RELATION OF HYDROGRAPHS OF RUNOFF TO SIZE AND CHARACTER OF DRAINAGE BASINS. Amer. Geophys. Union Trans. 13: 332–339.

(41) ———
1942. THE UNIT HYDROGRAPH METHOD. *In* Meinzer, O. E., ed., Physics of the Earth—IX: Hydrology. Ch. XIe, pp. 514–525. New York.

(42) SNYDER, W. M.
1955. HYDROGRAPH ANALYSIS BY THE METHOD OF LEAST SQUARES. Amer. Soc. Civ. Engin., Jour. Hydraulics Div. 81: 1–25.

(43) ———
1961. MATRIX OPERATIONS IN HYDROGRAPH COMPUTATIONS. Tenn. Val. Authority Res. Paper 1. Knoxville.

(44) WILLIAMS, G. R.
1950. HYDROLOGY. *In* H. Rouse, ed., Engineering Hydraulics. Pp. 229–320, illus. New York.

(45) WISLER, C. O., and BRATER, E. F.
1949. HYDROLOGY. 419 pp., illus. New York.

LECTURE 5: IDENTIFICATION BASED ON CONTINUOUS DATA

Transform Methods of Identification

Lecture 5 deals with the identification of linear time-invariant systems where the data are given in continuous form, that is, by functions of a continuous variable. Historically, unit hydrograph procedures were first developed for discrete or quantized data and only later adapted to continuous data. In a systematic approach, one can start either with continuous inputs and outputs or with discrete inputs or outputs. Since most hydrologists are more familiar with continuous mathematics than with discrete mathematics, the present lextures deal with continuous data before going on to discrete data. In lectures 5 and 6, we will be dealing only with the question of identification; the problem of simulation will be dealt with in lectures 7, 8, 9, and 10.

In tackling the problem of system identification, we are trying to develop objective methods for describing the way in which a particular system operates on inputs in order to produce outputs. This description—which may be expressed in graphical, numerical, or functional form—will reflect the general operation of the system but will tell us nothing about the nature of the system, about the nature of any of its components, or the way in which these components are put together. If we can obtain a description of the operation of the system for some general class of inputs (and if our assumptions of linearity and time-invariance are reasonable), then we will have little difficulty in predicting the output from the system due to any input belonging to this general class. If linearity holds, then we can use the principle of superposition to predict the output from any shape of input; if time-invariance holds, we can apply the description of the operation of the system obtained from past records to a future time. These assumptions may appear unduly restrictive, but the strategy of parametric hydrology is to master the special case of linear time-invariant systems before relaxing these assumptions.

It was shown in lecture 1 that the assumptions of linearity and time-invariance allow us to relate the input and output of a particular system by the convolution relationship:

$$y(t) = \int_{-\infty}^{\infty} x(\tau)h(t-\tau)\, d\tau \tag{1a}$$

or

$$y(t) = \int_{-\infty}^{\infty} x(t-\tau)h(\tau)\, d\tau \tag{1b}$$

where $h(t)$ is the impulse response of the system and provides a complete

description of the operation of the system. If the system is a causal system, then the relationship between input and output is given by:

$$y(t) = \int_{-\infty}^{t} x(\tau)h(t-\tau)\, d\tau \tag{2a}$$

or

$$y(t) = \int_{\infty}^{0} x(t-\tau)h(\tau)\, d\tau \tag{2b}$$

If, in addition to the system being causal, the input is isolated, then we can write:

$$y(t) = \int_{0}^{t} x(\tau)h(t-\tau)\, d\tau \tag{3a}$$

or

$$y(t) = \int_{0}^{t} x(t-\tau)h(\tau)\, d\tau \tag{3b}$$

provided the time origin is taken to be not later than the start of the input. In these circumstances, the problem of system identification reduces to the mathematical problem of determining the function $h(t)$ when given the functions $x(t)$ and $y(t)$ and the relationship indicated by equations 1, 2, or 3.

The approach to the solution of the identification problem by transform methods was mentioned in lecture 1. In these methods, the input, output, and impulse response, which are connected by the convolution relationship:

$$y(t) = x(t) * h(t) \tag{4}$$

are each subjected to the same transformation so that:

$$T(x) = T[x(t)] \tag{5a}$$

$$T(y) = T[y(t)] \tag{5b}$$

and

$$T(h) = T[h(t)] \tag{5c}$$

These transformed functions are then connected by the relationship:

$$T(y) = T(x)\lambda T(h) \tag{6}$$

where λ is the operation in the transform domain, which corresponds to convolution in the time domain.

If equation 6—which may be described as a linkage equation (*18*)—is simple in form, then the transform of the system response may be expressed in terms of the transforms of the input and the output. This transform of the

impulse response can then be inverted, though sometimes only with great difficulty, to obtain the system response in the time domain:

$$h(t) = T^{-1}[T(h)] \tag{7}$$

The general procedure is illustrated in figure 1–11. There are three separate stages in the identification process: (1) the transformation of the input and the output (equation 5), (2) the solution of the linkage equation (equation 6), and (3) the inversion to obtain the impulse response in the time domain (equation 7). The efficacy of any transform method depends on the ease with which these three operations may be carried out. Nearly all of the methods proposed for the identification of hydrologic systems with continuous input and output, where the input can be isolated, may be considered as transform methods. These methods are discussed in detail later in this lecture, but at the moment, it is only necessary to commend briefly on their relationship to one another.

System identification based on Fourier series involves the expansion of both the input and the output into a series of sine and cosine terms. In each case, the coefficients in the Fourier series represent the transformation of the respective function, and the determination of these Fourier coefficients represents the step corresponding to equation 5 above. Because the sines and cosines are orthogonal to one another, the Fourier coefficients for the input and output can easily be obtained by integration. If a linkage equation can be obtained corresponding to equation 6, then the Fourier coefficients of the impulse response can be determined from the Fourier coefficients of the input and the output (*18*). The solution of equation 7, that is, the inversion of the transform, offers no difficulty because the impulse response in the time domain can be reconstituted from its Fourier elements. Though the Fourier method is largely applied to periodic data, it can be applied, in the case of an isolated input, to a system with a finite memory by basing the analysis on the assumption that the input and the output are periodic with a period which is equal to or greater than the length of the output.

The restriction to isolated inputs and finite memories can be relaxed by using the Fourier integral or Fourier transform instead of Fourier series (*20*). This was the line of development adopted by electrical engineers in dealing with transient phenomena. The use of the Fourier transform, however, has the disadvantage that the problem of inversion is much more difficult than in Fourier series. If the Fourier coefficients of the impulse response are known, then the impulse response itself is known in the time domain to an accuracy depending on the number of Fourier terms. In contrast, the Fourier integral is difficult to invert, particularly if it is only known numerically. In systems analysis, the Fourier integral is usually replaced by the Laplace transform to enable us to handle unstable systems or systems whose stability is in doubt.

The numerical inversion of the Laplace transform (*6*) is even more difficult than numerical inversion of the Fourier integral.

The first transformation method used to analyze hydrologic data was the method of moments proposed by Nash (*17*) in 1959. From a theoretical point of view, the moments (and the cumulants which will be discussed later) can be derived from the Fourier integral or the Laplace transform. Moments and cumulants share with the Fourier integral and the Laplace transform the advantage of a simple linkage equation coupled with the disadvantage of difficulty of inversion.

Dooge (*9*) has proposed the use of Laguerre functions in place of Fourier analysis. Laguerre analysis shares with the Fourier series the advantage of orthogonality and with the Fourier transform the property of covering the range from zero to infinity. However, Laguerre analysis has the disadvantage of requiring a more complicated linkage equation, which makes the determination of the coefficients of the impulse response numerically less stable than where the linkage equation consists of a single term.

Analysis by Fourier Series

The definition and properties of Fourier series and other orthogonal functions were discussed in lecture 3 (see pp. 86–93). In the present section, we are concerned with the application of Fourier series to the identification of linear time-invariant systems. For such a system, the input, impulse response, and output are connected by the convolution relationship:

$$y(t) = \int_{-\infty}^{\infty} x(\tau)h(t-\tau)\, d\tau \tag{7a}$$

If the system is causal, this relationship can be written as:

$$y(t) = \int_{-\infty}^{t} x(\tau)h(t-\tau)\, d\tau \tag{7b}$$

and if the system is causal and has a finite memory M, then we have:

$$h(t) = \int_{t-M}^{t} x(\tau)h(t-\tau)\, d\tau \tag{7c}$$

Where the input is periodic with a period T, the output will be given by:

$$y(t+kT) = \int_{t-M}^{t} x(\tau+kT)h(t-\tau)\, d\tau \tag{8}$$

If the period of the input (T) is greater than the sum of the duration of

input (N) plus the memory length of the system (M), that is, if—

$$T \geq (M+N) \tag{9a}$$

then the value of the output y will return to zero during each period. Equation 8 can be replaced by the equation for an isolated output due to an isolated input:

$$y(t) = \int_{t-M}^{t} x(\tau)h(t-\tau)\, d\tau \tag{9b}$$

which is seen to be identical with equation 7c. An isolated storm event can be analyzed by Fourier methods provided the assumed period T is greater than the duration of output, which is the condition given by equation 9a.

In the Fourier analysis of systems, we need to obtain the Fourier coefficients of the output as a function of the Fourier coefficients of the input and the Fourier coefficients of the impulse response. These coefficients appear in the Fourier series expansion of the three functions:

$$x(t) = \sum_{m=-\infty}^{\infty} c_m \exp\left(i\,\frac{m2\pi t}{T}\right) \tag{10a}$$

$$h(t) = \sum_{n=-\infty}^{\infty} \gamma_n \exp\left(i\,\frac{n2\pi t}{T}\right) \tag{10b}$$

$$y(t) = \sum_{p=-\infty}^{\infty} C_p \exp\left(ip\,\frac{2\pi t}{T}\right) \tag{10c}$$

The exponential or complex form of the Fourier series has been used in the above equations because the linkage equation between the respective coefficients and other properties take a particularly simple form in the complex coefficients. Since $h(t)$ is zero for values of t between $t=M$ and $t=T$, equation 9b can also be written as:

$$y(t) = \int_{t-T}^{t} x(\tau)h(t-\tau)\, d\tau \tag{9c}$$

By the property of orthogonality we have:

$$C_p = \frac{1}{T}\int_0^T y(t)\, \exp\left(-i\cdot\frac{p2\pi t}{T}\right) dt \tag{11}$$

Substitution from equation 9c into equation 11 gives:

$$C_p = \frac{1}{T}\int_0^T \exp\left(-i\cdot\frac{p2\pi t}{T}\right)\int_{t-T}^{t} x(\tau)h(t-\tau)\,d\tau\, dt \tag{12}$$

Reversing the order of integration gives:

$$C_p = \frac{1}{T}\int_{t-T}^{t} x(\tau) \int_0^T \exp\left(-i\,\frac{p2\pi t}{T}\right) h(t-\tau)\,dt\,d\tau \tag{13}$$

which can also be written as:

$$C_p = \frac{1}{T}\int_{t-T}^{t} x(\tau)\,\exp\left(-i\,\frac{p2\pi t}{T}\right)\int_0^T \exp\left(-i\,\frac{p2\pi t-\tau}{T}\right) h(t-\tau)\,dt\cdot d\tau \tag{14}$$

Performing the inner integration with respect to $(t-\tau)$ gives:

$$C_p = \int_{t-T}^{t} x(\tau)\,\exp\left(-i\,\frac{p2\pi\tau}{T}\right)\gamma_p\,d\tau \tag{15a}$$

or

$$C_p = \gamma_p \int_{t-T}^{t} x(\tau)\,\exp\left(-i\,\frac{p2\pi\tau}{T}\right) d\tau \tag{15b}$$

so that on integration with respect to τ we obtain:

$$C_p = T\cdot\gamma_p\cdot c_p \tag{16}$$

which is the required linkage equation between the Fourier coefficients of the output C_p, the Fourier coefficients of the input c_p, and the Fourier coefficients of the impulse response γ_p.

In practice, the linkage is not quite this simple, because for a real function the exponential Fourier coefficients will be complex. Accordingly, it is preferable to write the output in terms of cosine coefficients (A_k) and sine coefficients (B_k), the input in terms of cosine coefficients (a_k) and sine coefficients (b_k), and the impulse response in terms of cosine coefficients α_k and sine coefficients β_k. Because we have:

$$C_k = \tfrac{1}{2}(A_k - iB_k) \tag{17a}$$

$$c_k = \tfrac{1}{2}(a_k - ib_k) \tag{17b}$$

$$\gamma_k = \tfrac{1}{2}(\alpha_k - i\beta_k) \tag{17c}$$

equation 16 can be written as:

$$\tfrac{1}{2}(A_k - iB_k) = T\cdot\tfrac{1}{2}(a_k - ib_k)\tfrac{1}{2}(\alpha_k - i\beta_k) \tag{18a}$$

which the real part gives:

$$A_k = \frac{T}{2}\,(a_k\alpha_k - b_k\beta_k) \tag{18b}$$

and the imaginary part:

$$B_k = \frac{T}{2}\,(a_k\beta_k + b_k\alpha_k) \tag{18c}$$

In system identification, we need to express the coefficients of the impulse response (α and β) in terms of the coefficients of the input (a and b) and the coefficients of the output (A and B). These are obtained by solving equations 18b and 18c for α_k and β_k, getting:

$$\alpha_k = \frac{2}{T} \cdot \frac{a_k A_k + b_k B_k}{a_k^2 + b_k^2} \tag{19a}$$

$$\beta_k = \frac{2}{T} \cdot \frac{a_k B_k - b_k A_k}{a_k^2 + b_k^2} \tag{19b}$$

Once the values of α_k and β_k have been obtained, the form of the impulse response is easily determined since it is given by:

$$h(t) = \tfrac{1}{2}\alpha_0 + \sum_{k=1}^{\infty} \left(\alpha_k \cos \frac{k2\pi t}{T} + \beta_k \sin \frac{k2\pi t}{T} \right) \tag{20}$$

If only a limited number of coefficients are determined, the effect is that the high frequency components neglected by the truncation are not included in the impulse response. Because hydrologic systems are heavily damped, the neglect of high frequency components does not give rise to appreciable error.

The linkage equation derived above is for Fourier coefficients defined in terms of a continuous function. If the data were defined continuously, it would be possible to compute these coefficients either by Gaussian quadrature formula based on a very large number of equally spaced sample points. In lecture 6, the same linkage equation is obtained for the pulse response where the input and the output are defined discretely. In the latter case, the linkage equation was derived and applied by O'Donnell (*18*) to actual data of surface runoff.

Analysis by Fourier and Laplace Transforms

As mentioned in lecture 3, the Fourier and Laplace transform techniques have been widely used in the analysis of nonperiodic phenomena (*12*, *20*). In these cases, a simple linkage equation can also be found. Most hydrologic systems are inherently stable and, thus, could be analyzed by Fourier transforms; however, Laplace transforms are more widely treated in the engineering and mathematical literature, and the tables of transforms are more extensive (*12*, *23*). In lecture 3, both techniques were mentioned and both will be discussed in this lecture.

The Fourier transforms of the input, output, and impulse response are given by:

$$X(\omega) = \int_{-\infty}^{\infty} x(t) \exp(-i\omega t)\, dt \tag{21a}$$

$$Y(\omega) = \int_{-\infty}^{\infty} y(t) \exp(-i\omega t)\, dt \tag{21b}$$

$$H(\omega) = \int_{-\infty}^{\infty} h(t) \exp(-i\omega t)\, dt \tag{21c}$$

For a linear time-invariant system, we have the relationship:

$$y(t) = \int_{-\infty}^{\infty} x(\tau) h(t-\tau)\, d\tau \tag{22}$$

It is necessary to find the linkage equation between the Fourier transform of the output and the Fourier transforms of the input and the impulse response. Substituting from equation 21 into equation 22, we obtain:

$$Y(\omega) = \int_{-\infty}^{\infty} \exp(-i\omega t) \int_{-\infty}^{\infty} x(\tau) h(t-\tau) d\tau\, dt \tag{23}$$

Reversing the order of integration gives:

$$Y(\omega) = \int_{-\infty}^{\infty} x(\tau) \int_{-\infty}^{\infty} \exp(-i\omega t) h(t-\tau) dt\, d\tau \tag{24}$$

Replacing t by $(t-\tau)$ as a variable of integration in the inner integration and rearranging $\exp(-i\omega t)$ gives:

$$Y(\omega) = \int_{-\infty}^{\infty} x(\tau) \exp(-i\omega\tau) \int_{-\infty}^{\infty} \exp[-i\omega(t-\tau)] h(t-\tau) d(t-\tau)\, d\tau \tag{25}$$

and performing the inner integration gives:

$$Y(\omega) = \int_{-\infty}^{\infty} x(\tau) \exp(-i\omega t) \cdot H(\omega)\, d\tau \tag{26a}$$

$$= H(\omega) \int_{-\infty}^{\infty} x(\tau) \exp(-i\omega\tau)\, d\tau \tag{26b}$$

Performing the remaining integration then gives the required relationship:

$$Y(\omega) = H(\omega) \cdot X(\omega) \tag{27}$$

As compared with analysis by Fourier series, the coefficients of the Fourier series analysis are replaced by the continuous functions of the Fourier transform. If we allow for this difference, the linkage equation given by equation 27 is seen to be of the same form as the linkage equation for Fourier analysis given by equation 16 above.

While the form of the relationship shown in equation 26 is suitable for

analytical purposes, it is necessary for the purposes of calculation to separate the real and imaginary part of the Fourier transform. Thus, we need to write:

$$X(\omega) = X_R(\omega) + iX_I(\omega) \tag{28a}$$

$$Y(\omega) = Y_R(\omega) + iY_I(\omega) \tag{28b}$$

$$H(\omega) = H_R(\omega) + iH_I(\omega) \tag{28c}$$

Substituting the expressions from equation 28 into equation 27 and equating the real and imaginary parts, we obtain:

$$Y_R(\omega) = H_R(\omega)X_R(\omega) - H_I(\omega)X_I(\omega) \tag{29a}$$

$$Y_I(\omega) = H_R(\omega)X_I(\omega) + H_I(\omega)X_R(\omega) \tag{29b}$$

In the identification problem, we need to express the real and imaginary parts of the Fourier transform of the impulse response in terms of the real and imaginary parts of the Fourier transforms of the input and the output. These are given by:

$$H_R(\omega) = \frac{X_R(\omega)Y_R(\omega) + X_I(\omega)Y_I(\omega)}{X_R(\omega)^2 + X_I(\omega)^2} \tag{30a}$$

$$H_I(\omega) = \frac{X_R(\omega)Y_I(\omega) - X_I(\omega)Y_R(\omega)}{X_R(\omega)^2 + X_I(\omega)^2} \tag{30b}$$

In electrical engineering, it is unusual to express the Fourier transform of the system in terms of the amplitude and the phase angle. In hydrologic systems, the formulation of equation 30 is probably more convenient.

The determination of $H_R(\omega)$ and $H_I(\omega)$ only specifies the impulse response in the frequency domain. To find the description of the impulse response in the time domain, it is necessary to invert the Fourier transform $H(\omega)$. This is given by:

$$h(t) = \frac{1}{2\Pi}\int_{-\infty}^{\infty} [H_R(\omega)\cos\omega t - H_I(\omega)\sin\omega t]\, d\omega \tag{31a}$$

Because $h(t)$ is real, we have:

$$H_R(-\omega) = H_R(\omega) \tag{31b}$$

and

$$H_I(-\omega) = -H_I(\omega) \tag{31c}$$

so that we can write:

$$h(t) = \frac{1}{\Pi}\int_{0}^{\infty} [H_R(\omega)\cos(\omega t) - H_I(\omega)\sin\omega t]\, d\omega \tag{31d}$$

If $h(t)$ is causal, that is, if it is identically zero for all negative values of t,

we can also write:

$$h(t) = \frac{2}{\Pi} \int_0^{\alpha} H_R(\omega) \cos(\omega t)\, d\omega \tag{31e}$$

or

$$h(t) = \frac{2}{\Pi} \int_0^{\alpha} H_I(\omega) \sin(\omega t)\, d\omega \tag{31f}$$

Equation 30 may be compared with equation 19. Again, the Fourier integral approach is similar to the Fourier series approach except for the replacement of summation by integration. The necessity to integrate suggests the possible use of values of ω determined by the requirements of Gaussian quadrature.

For the bilateral Laplace transform, defined by:

$$F_B(s) = \mathfrak{L}_B[f(t)]$$

$$= \int_{-\infty}^{\infty} f(t) \exp(-st)\, dt \tag{32}$$

the development of the linkage follows exactly the same steps as in the Fourier transform. However, in the more usual unilateral Laplace transform defined by:

$$F(s) = \mathfrak{L}[f(t)]$$

$$= \int_0^{\infty} f(t) \exp(-st)\, dt \tag{33}$$

care must be taken with the limits of integration.

For a linear time-invariant system for which the input is zero for negative time, we have the relationship:

$$y(t) = \int_0^{\infty} x(\tau) h(t-\tau)\, d\tau \tag{34}$$

The Laplace transform of the output is given by:

$$Y(s) = \int_0^{\infty} y(t) \exp(-st)\, dt \tag{35a}$$

$$= \int_0^{\infty} \exp(-st) \int_0^{\infty} x(\tau) h(t-\tau)\, d\tau\, dt \tag{35b}$$

Reversal of the order of integration gives:

$$Y(s)=\int_0^\infty x(\tau)\int_0^\infty \exp(-st)h(t-\tau)dt\,d\tau \tag{36a}$$

$$=\int_0^\infty x(\tau)\exp(-s\tau)\int_0^\infty \exp[-s(t-\tau)]h(t-\tau)dt\,d\tau \tag{36b}$$

Because the system is causal, $h(t-\tau)$ will be zero for any value of t less than τ, and, consequently, the lower limit of integration for the right-hand integral can be set equal to τ, thus giving us:

$$Y(s)=\int_0^\infty x(\tau)\exp(-s\tau)\int_\tau^\infty \exp[-s(t-\tau)]h(t-\tau)dt\,d\tau \tag{37}$$

Changing the variable in the inner integration from t to $u=t-\tau$, we obtain:

$$Y(s)=\int_0^\infty x(\tau)\exp(-s\tau)\int_0^\infty \exp(-su)h(u)du\,d\tau \tag{38a}$$

$$Y(s)=\int_0^\infty x(\tau)\exp(-s\tau)\cdot H(s)\,d\tau \tag{38b}$$

$$Y(s)=H(s)\int_0^\infty x(\tau)\exp(-s\tau)\,d\tau \tag{38c}$$

$$Y(s)=H(s)\cdot X(s) \tag{38d}$$

Once again, the linkage equation has the same general form as in the case of Fourier series and Fourier transform. Equation 38d only gives us the Laplace transform of the impulse response or the system function as it is sometimes called. The numerical inversion of a Laplace transform is extremely difficult. One of the most efficient ways of doing it is to expand the Laplace transform in terms of a series of orthogonal polynomials and then invert this series term by term (*6*). It would appear, however, that if the orthogonals are going to be used for inversion, then we might as well start and base our whole analysis on the use of orthogonals.

Both the Fourier transform method and the Laplace transform method have been used for the identification of hydrologic systems. In 1952, Paynter (*21*) suggested the use of Laplace transform methods for the study of both hydraulic and hydrologic systems. Diskin[1] determined the Laplace transforms for a large number of storm events. The watersheds examined were between

[1] DISKIN, M. H. A BASIC STUDY OF THE LINEARITY OF THE RAINFALL-RUNOFF PROCESS IN WATERSHEDS. Ph.D. thesis, Univ. Ill. 1964. [University Microfilms Publ. No. 64-8375.]

30 square miles and 1,420 square miles in area and between four and 10 storms were examined for each watershed. In the same year, Levi and Valdes (*16*) discussed the application of Fourier transform techniques to the determination of the IUH and applied the method to the Tuxpan River in Mexico. More recently, Blank and Delleur (*7*) used the Fourier transform approach in a study of 1,059 hydrographs from 55 watersheds in Indiana.

Moments and Cumulants

The first transform method of identification applied to hydrologic data was based on moments used by Nash (*17*) in 1959. In systems analysis, moments are used in the same sense as in statistics. Thus, the Rth moment of a function, which has been normalized to unit area, about the point a, is defined as:

$$M_R(f) = \int_{-\infty}^{\infty} f(t) \cdot (t-a)^R \, dt \tag{39}$$

In particular, moments about the time origin are defined as:

$$U_R'(f) = \int_{-\infty}^{\infty} f(t) \cdot t^R \cdot dt \tag{40}$$

and moments about the center of area are defined as:

$$U_R(f) = \int_{-\infty}^{\infty} f(t) \, (t - U_i')^R \, dt \tag{41}$$

The moments are related to the Fourier transform and the Laplace transform; in the theory of statistics, the Fourier transform is used in the form of a characteristic function or a moment generating function. If we are dealing with functions that are zero for negative time and are only interested in moments about the origin, it is possible to perform all the operations necessary with the ordinary Laplace transform. If, however, we wish to deal with the moments about the center of area (or with functions which are not zero for negative time), then it is necessary to use either the Fourier transform or the bilateral Laplace transform. The following development is in terms of the bilateral Laplace transform, which is defined by:

$$F_B(s) = \int_{-\infty}^{\infty} f(t) \, \exp(-st) \, dt \tag{42}$$

If the above expression is differentiated with respect to s, we obtain:

$$\frac{d}{ds}[F_B(s)] = -\int_{-\infty}^{\infty} f(t) \cdot t \cdot \exp(-st) \, dt \tag{43}$$

and if the differentiation is carried out R times:

$$\frac{d^R}{ds^R}[F_B(s)] = (-1)^R \int_{-\infty}^{\infty} f(t) \cdot t^R \cdot \exp(-st)\, dt \tag{44}$$

By setting $s=0$ on both sides of the equation, we obtain:

$$\frac{d^R}{ds^R}[F_B(s)]_{s=0} = (-1)^R \int_{-\infty}^{\infty} f(t) \cdot t^R\, dt \tag{45a}$$

$$= (-1)^R \cdot U_R'(f) \tag{45b}$$

so that the Rth moment about the origin can be obtained from the Laplace transform provided that the transform exists and can be differentiated R times at $s=0$.

The relationship between the moments of the input and the output and the impulse can be obtained as follows. For a linear time-invariant system, we have:

$$Y_B(s) = X_B(s) \cdot H_B(s) \tag{46}$$

The Rth moment of the output about the origin $t=0$ is given by:

$$U_R'(y) = (-1)^R \frac{d^R}{ds^R}[Y_B(s)]_{s=0} \tag{47}$$

Substitution from equation 46 into equation 47 gives:

$$U_R'(y) = (-1)^R \frac{d^R}{ds^R}[X_B(s) \cdot H_B(s)]_{s=0} \tag{48}$$

Using Leibnitz's formula for the continued differentiation of a product, we have:

$$U_R'(y) = (-1)^R \sum_{k=0}^{k=R} \binom{R}{k} \frac{d^k}{ds^k}[X_B(s)]_{s=0} \frac{d^{R-k}}{ds^{R-k}}[H_B(s)]_{s=0} \tag{49}$$

which gives the relationship between the moments about the origin as:

$$U_R'(y) = \sum_{k=0}^{k=R} \binom{R}{k} U_k'(x)\, U_{r-k}'(h) \tag{50}$$

It can be shown that if the moments of the normalized output are taken around the point $t=a$, the moments of the normalized input around $t=b$, and the moments of the normalized response about the point $t=c$, and if $a=b+c$, then the relationships between the moments is the same form as equation 50. In particular, if the moments are taken about the respective centers of area,

we have:

$$U_R(y) = \sum_{k=0}^{k=R} \binom{R}{k} U_k(x)\, U_{R-k}(h) \tag{51}$$

which was the form of the theorem of moments for a linear time-invariant system published by Nash (*17*). For the special case of $R=1$, equation 50 becomes:

$$U_1'(y) = U_1'(s) + U_1'(h) \tag{52}$$

which expresses the fact that the lag of the output is equal to the lag of the input plus the lag of the impulse response. For $R=2$ and $R=3$ in equation 51, because $U_1(\ )=0$, we have the special cases:

$$U_2(y) = U_2(x) + U_2(h) \tag{53a}$$

$$U_3(y) = U_3(x) + U_3(h) \tag{53b}$$

This special additive relationship does not hold for any higher moments.

Equations 50 and 51 represent linkage equations between the moments of the output, the input, and the impulse response. Once the moments of the input and the output have been determined, the corresponding moments of the impulse response can also be determined. The final inversion of the latter can only be made via the Fourier transform or Laplace transform. The problem of moment inversion is to determine the nature of the function given the moments of that function. If the Laplace transform of the function is consistent when near zero, it may be expressed in terms of a Maclaurin series:

$$F(s) = \sum_{k=0}^{k=\infty} \frac{d^k}{ds^k}[F(s)]_{s=0} \cdot \frac{s^k}{k!} \tag{54}$$

which can be written as:

$$F(s) = \sum_{k=0}^{k=\infty} (-1)^k U_k'(f) \frac{s^k}{k!} \tag{55}$$

Even if only a few moments are known, they give a certain amount of information about the Laplace transform near the origin and, therefore, of the original function at relatively large values of time.

Moments are not the only set of parameters which may be used to describe the response function; in some cases they are not the most convenient set. Another set of useful parameters used in statistics are the cumulants or so-called semivariants (*14*). These are defined as the set of parameters for which the logarithm of the characteristic function (or Fourier transform) is the generating function. All the cumulants except the first are unaffected by a change of origin. In a similar manner to the moments, the cumulants can be derived by continuous differentiation of the logarithm of the Fourier transform

or the Laplace transform. Thus, the cumulants may be defined by:

$$K_R(f) = (-1)^R \frac{d^R}{ds^R}[\log F_b(s)]_{s=0} \tag{56}$$

For a linear time-invariant system we have:

$$Y(s) = X(s) \cdot H(s) \tag{38a}$$

and therefore:

$$\log Y(s) = \log X(s) + \log H(s) \tag{57}$$

Differentiating both sides of equation 57 R-times, and setting $s=0$, we obtain:

$$\frac{d^R}{ds^R}[\log Y(s)]_{s=0} = \frac{d^R}{ds^R}[\log X(s)]_{s=0} + \frac{d^R}{ds^R}[\log H(s)]_{s=0} \tag{58}$$

which is clearly equivalent to:

$$K_R(y) = K_R(x) + K_R(h) \tag{59}$$

thus, indicating that in the case of cumulants we get the simple additive relationship of equation 59 for all orders of cumulant.

The simple form of the moments relationship in equation 52 and equation 53 is due to the fact that the first cumulant is equal to the first moment about the origin and the second and third cumulants are equal to the second and third moments about the center of area, respectively. The fourth cumulant is equal to the fourth moment about the center of area minus three times the square of the second moment about the center of area and is known in statistics as *excess kurtosis*. The Gaussian distribution has a first cumulant which determines the position of the mean and a second cumulant which determines the variation about the mean, but all cumulants above the second are zero. In the gamma distribution, which is widely used in hydrology, the Rth cumulant takes the form

$$K_R = n(R-1)!K^R \tag{60}$$

where n and K are the parameters of the gamma distribution.

Nash (*17*) also introduced the idea of plotting dimensionless shape factors derived from moments in order to compare the shape of derived unit hydrographs. He defined a dimensionless moment of order R as the Rth moment about the center of area divided by the first moment about the origin raised to the power of R, that is,

$$m_R = \frac{U_R}{(U_i')^R} \tag{61}$$

In dealing with the linear theory of open channel flow, Dooge[2] found it more convenient to define dimensionless shape factors in terms of the cumulants rather than the moments. These are defined as:

$$S_R = \frac{K_R}{(K_i)^R} \tag{62}$$

and can be plotted against one another to compare different functions or models with one another or to compare a model with the data which it is attempting to simulate.

In the above discussion of moments and cumulants, it has been assumed, as indicated earlier, that all the distributions involved have been normalized to unit area. The use of normalized distributions is convenient both in theoretical investigations and in actual computations. If required, however, corresponding relationships can be derived for the case where the input and output have not been normalized.

Laguerre Analysis of Systems

It was noted previously that a Fourier analysis of systems had the advantage of orthogonality but the disadvantage that the method could only be used for an isolated input to a system with finite memory. The success of the method, however, would suggest that in systems with infinite memory an alternative method of analysis which might be useful would be one based on functions which are orthogonal over the whole range from zero to infinity instead of only over a finite range. Because Laguerre polynomials are orthogonal over the range 0 to ∞ with respect to the weighting factor $\exp(-t)$, this suggests the use of Laguerre functions defined by:

$$f_n(t) = \exp\left(-\frac{t}{2}\right) \sum_{k=0}^{k=n} (-1)^k \binom{n}{k} t^k k! \tag{63}$$

as the basis of the systems analysis. Dooge (*9*) has suggested that these functions may be more convenient than Fourier methods for heavily damped systems because the Laguerre functions can be seen to be made up of gamma distributions, a function which has been widely used to represent the damped response typical of natural watersheds.

If Laguerre functions are to be used as the basis of system identification, then it is necessary to express the input, output, and impulse response in

---

[2] DOOGE, J. C. I. LINEAR THEORY OF OPEN CHANNEL FLOW, III: MOMENTS AND CUMULANTS. Dept. Civ. Engin., University College, Cork, Ireland. 1967. (Unpublished report.)

terms of Laguerre functions. Because the Laguerre functions are orthogonal to one another this is easily done. There is no guarantee, however, that the Laguerre functions would be convenient functions to use in the analysis of the system. The first step necessary is to examine what the effect is of convoluting one Laguerre function with another, that is:

$$g(t) = \int_0^t f_m(\tau) f_n(t-\tau)\, d\tau \tag{64}$$

where $f_m(t)$ and $f_n(t)$ are Laguerre functions as defined by equation 63. The right-hand side of equation 64 results from multiplying a power series of order m by a power series of order n and then integrating, thus producing a power series of order $(m+n+1)$. The resulting power series could therefore consist of $(m+n+1)$ terms, each of which is a Laguerre function. In practice, all but two of the terms drop out and only the last two terms remain, the result being:

$$g(t) = f_{m+n}(t) - f_{m+n+1}(t) \tag{65}$$

For the Laguerre series analysis of a system, we proceed as before and expand the input, impulse response, and output in terms of Laguerre functions:

$$x(t) = \sum_{m=0}^{m=\infty} a_m f_m(t) \tag{66a}$$

$$h(t) = \sum_{n=0}^{n=\infty} \alpha_n f_n(t) \tag{66b}$$

$$y(t) = \sum_{p=0}^{p=\infty} A_p f_p(t) \tag{66c}$$

Due to the property of orthogonality, these coefficients are given by:

$$a_m = \int_0^\infty x(t) f_m(t)\, dt \tag{67a}$$

$$\alpha_n = \int_0^\infty h(t) f_n(t)\, dt \tag{67b}$$

$$A_p = \int_0^\infty y(t) f_p(t)\, dt \tag{67c}$$

The linkage equation can be derived as follows. Substituting for $y(t)$ in equation 67c, we obtain:

$$A_p = \int_0^\infty f_p(t) \int_0^t x(\tau) h(t-\tau) d\tau\, dt \tag{68}$$

and substituting in this equation the expressions for $x(t)$ and $h(t)$ in equations 66a and 66b, we obtain:

$$A_p = \int_0^\infty f_p(t) \int_0^t \sum_{m=0}^{m=\infty} a_m f_m(\tau) \sum_{n=0}^{n=\infty} \alpha_n f_n(t-\tau)\, d\tau\, dt \tag{69}$$

Reversing the order of the summations and the integrations, we have:

$$A_p = \sum_{m=0}^{m=\infty} a_m \sum_{n=0}^{n=\infty} \alpha_n \int_0^\infty f_p(t) \int_0^t f_m(\tau) f_n(t-\tau)\, d\tau\, dt \tag{70}$$

Using the result of equation 65, this becomes:

$$A_p = \sum_{m=0}^{m=\infty} a_m \sum_{n=0}^{n=\infty} \alpha_n \int_0^\infty f_p(t) [f_{m+n}(t) - f_{m+n+1}(t)]\, dt \tag{71}$$

Integrating with respect to t and using the orthogonality relationship, we have:

$$A_p = \sum_{m=0}^{m=\infty} a_m \sum_{n=0}^{n=\infty} \alpha_n [\delta_{p,m+n} - \delta_{p,m+n+1}] \tag{72}$$

Performing the summation with respect to n results in:

$$A_p = \sum_{m=0}^{m=\infty} a_m [\alpha_{p-m} - \alpha'_{p-m-1}] \tag{73a}$$

Since the Laguerre coefficients of the impulse response are only defined for nonnegative values of n, this can be written:

$$A_p = \sum_{m=0}^{m=p} a_m \alpha_{p-m} - \sum_{m=0}^{m=p-1} a_k \alpha_{p-1-m} \tag{73b}$$

which can be readily shown to be equivalent to:

$$\sum_{k=0}^{k=p} A_k = \sum_{m=0}^{m=p} a_m \alpha_{p-m} \tag{74}$$

The problem of identification is to determine the values of α_n given the values of A_p and a_m. This can be done by successive calculation of the values of α in accordance with:

$$a_0 \alpha_p = \sum_{k=0}^{k=p} A_k - \sum_{m=0}^{m=p-1} a_m \alpha_{p-m} \tag{75}$$

Once the values of α_n are determined, the impulse response is easily found in terms of equation 66b.

The main purpose of using orthogonal functions is to determine conveniently the coefficients in the expansions of the given input and output. It is possible by means of Laguerre analysis to express the linkage in terms of gamma distributions rather than coefficients of Laguerre functions. The input and other functions can be expanded in terms of gamma distribution as follows:

$$x(t)=\sum_{r=0}^{r=\infty} d_r \frac{e^{-t/2}(t/2)^r}{2(r!)} \tag{76}$$

Because gamma distributions are not orthogonal to one another, it is not possible to obtain the values of the coefficients, d_r, directly, but they can be expressed in terms of the corresponding Laguerre coefficients obtained from equation 67a, or corresponding equation. The relationship between the two sets of coefficients is given by:

$$d_r=(-2)^{r+1}\sum_{m=r}^{m=\infty}\binom{m}{r}a_m \tag{77}$$

The result obtained by convoluting two gamma distributions, one of order m and the other of order n, is a gamma distribution of order $m+n+1$ as indicated by equation 78:

$$g(t)=\int_0^t \frac{e^{-\tau/2}(\tau/2)^m}{2(m!)}\cdot\frac{e^{-(t-\tau)/2}(t-\tau/2)^n}{2(n!)}\,d\tau \tag{78a}$$

$$=\frac{e^{-t/2}}{2(m!)(n!)}\cdot\frac{t^{m+n+1}}{2}\cdot\beta(m+1,n+1) \tag{78b}$$

where $\beta(m+1, n+1)$ is a beta function. Expressing the beta function in terms of factorials gives:

$$g(t)=\frac{e^{-t/2}\cdot(t/2)^{m+n+1}}{2(m+n+1)!} \tag{78c}$$

When the input function, output function, and impulse response functions are all expanded in terms of gamma distributions, we have the relationship:

$$\sum_{p=0}^{p=\infty} D_p\frac{e^{-t/2}(t/2)^p}{p!}=\sum_{m=0}^{m=\infty} d_m\frac{e^{-t/2}(t/2)^m}{m!}*\sum_{n=0}^{n=\infty} n\frac{e^{-t/2}(t/2)^n}{n!} \tag{79}$$

By comparing the terms on the two sides of this equation, we obtain the linkage relationship:

$$D_p=2\cdot\sum_{k=0}^{k=p-1} d_k\delta_{p-k-1} \tag{80}$$

Because, in the problem of identification, we need to express the values of δ

in terms of the values of D, and we need the linkage equation in the form:

$$d_0\delta_p = D_{p+1} - \sum_{k=1}^{k=p} d_k\delta_{p-k} \tag{81a}$$

if the value of d_0 is zero, then we can use:

$$d_1\delta_{p-1} = D_{p+1} - \sum_{k=2}^{k=p} d_k\delta_{p-k} \tag{81b}$$

It is not known whether use of the linkage equation in terms of gamma distributions is numerically more stable than direct use of the Laguerre coefficients.

If a function is to be expanded in terms of a Laguerre series, the length of series required to reproduce the function to a given degree of accuracy will depend on the time scale chosen for the Laguerre functions. In any given function, it is possible to determine the optimum time scale for Laguerre representation. For a time scale other than the optimum to reproduce the function to the same accuracy, a longer series would be required. In system identification, there would be different optimum time scales for the input and the output. The problem of choosing the optimum time scale in this case is currently under investigation.

Though Laguerre analysis has been applied to some discrete hydrologic field data (for which it is not orthogonal and therefore not appropriate), it has only been tested on synthetic hydrologic data of a continuous type (*9*, *10*). The method has, however, been applied to the analysis of cascaded systems in Chemical Engineering by Anderssen and White (*1*).

Time-Series Analysis

If the interval between nonzero inputs is shorter than the memory of the system, then the output will not return to zero and the techniques described above will not be applicable. In such cases, the input and output can be viewed as time series and can be described in terms of their autocorrelation and cross correlation as is done in the case of time series in communication theory (*15*).

The autocorrelation function may be defined by the limit:

$$\phi_{xx}(\tau) = \frac{1}{T}\int_{-T/2}^{T/2} x(t)x(t+\tau)\,dt \quad \text{as} \quad T\to\infty \tag{82}$$

and the cross correlation function by:

$$\phi_{xy}(\tau) = \frac{1}{T}\int_{-T/2}^{T/2} x(t)y(t+\tau)\,dt \quad \text{as} \quad T\to\infty \tag{83}$$

If there were no errors in input or output, then any of the systems described

earlier in this lecture should, apart from errors in computation, predict the impulse response perfectly. If however, there are errors in the data, that is, noise on the system, then perfect prediction is not possible. Methods of time series analysis have been proposed by Eagleson (*11*) and by Bayazit (*3*) as a method of handling this problem of noise in the same way as is done in communications engineering.

For any assumed causal impulse response, the residual error in the output ordinate is given by:

$$r(t)=y(t)-\int_0^\infty h(\tau)x(t-\tau)\,d\tau \tag{84}$$

The optimum linear response is one which minimizes the residual given by the above equation in some sense. If the criterion is taken as one of least squares, then the problem is to minimize the expression:

$$E[h(t)]=\frac{1}{T}\int_{-T/2}^{T/2}[r(t)]^2\,dt \quad \text{as} \quad T\rightarrow\infty \tag{85}$$

Insertion of the value of $r(t)$ from equation 84 in equation 85 gives:

$$E[h(t)]=\frac{1}{T}\int_{-T/2}^{T/2}\left[y(t)-\int_0^\infty h(\tau)x(t-\tau)\,d\tau\right]^2 dt \quad \text{as} \quad T\rightarrow\infty \tag{86}$$

The problem, therefore, reduces itself to finding the optimum value $h_{\text{opt}}(t)$, which, when used in equation 86, minimizes the expression $E[h(t)]$. Squaring the expression between square brackets in equation 84 gives rise to three terms as follows:

$$\frac{1}{T}y(t)y(t)\,dt \quad \text{as} \quad T\rightarrow\infty \tag{87a}$$

$$-\frac{2}{T}y(t)\int_0^\infty h(\tau)x(t-\tau)\,d\tau\,dt \quad \text{as} \quad T\rightarrow\infty \tag{87b}$$

$$\frac{1}{T}\int_{-T/2}^{T/2}\int_0^\infty h(\tau_1)x(t-\tau_1)\,d\tau_1\int_0^\infty h(\tau_2)x(t-\tau_2)\,d\tau_2\,dt \quad \text{as} \quad T\rightarrow\infty \tag{87c}$$

Both the first and the third terms must be nonnegative because they are the result of squaring the terms inside the square brackets in equation 84. The first of the three terms, that is, that given by equation 87a, is clearly equal to $\phi_{yy}(0)$. The reversal of the order of integration in equations 87b and 87c and use of the definitions of the autocorrelation and cross correlation function given by equations 82 and 83 reduce the second term to a single integral and the third term from a triple to a double integral. The expression to be mini-

mized can now be written as:

$$E[h(t)]=\phi_{yy}(0)-2\int_0^\infty h(\tau)\phi_{xy}(\tau)d\tau+\int_0^\infty h(\tau_1)d\tau_1\int_0^\infty h(\tau_2)\phi_{xx}(\tau_1-\tau_2)\,d\tau_2 \tag{88}$$

The minimization of the above expression is obtained by a manipulation of the ordinates of the impulse response $h(t)$ until the optimum causal impulse response is obtained. If the optimum causal linear response is denoted by $h_{\text{opt}}(t)$, then any nonoptimum linear response can be denoted by:

$$h(t)=h_{\text{opt}}(t)+\epsilon\cdot h'(t) \tag{89}$$

where ϵ is an arbitrary real nonnegative number and $h'(t)$ is an arbitrary causal function. If $h_{\text{opt}}(t)$ is a true optimal, then we must have:

$$E[h(t)]=E[h_{\text{opt}}(t)+\epsilon\cdot h'(t)]\geq E[h_{\text{opt}}(t)] \tag{90}$$

where $E[h(t)]$ is the error criterion defined by equations 84 to 88.

Substitution from equation 89 into equation 88 and segregation of the terms involving $h_{\text{opt}}(t)$ and $h'(t)$ results in the equation:

$$\begin{aligned}E[h(t)]=E[h_{\text{opt}}(t)]&-2\epsilon\int_0^\infty h'(\tau)\phi_{xy}(\tau)d\tau \\ &+2\epsilon\int_0^\infty h'(\tau_1)d\tau_1\int_0^\infty h_{\text{opt}}(\tau_2)\phi_{xx}(\tau_1-\tau_2)d\tau_2 \\ &+\epsilon^2\int_0^\infty h'(\tau_1)d\tau_1\int_0^\infty h'(\tau_2)\phi_{xx}(\tau_1-\tau_2)\,d\tau_2\end{aligned} \tag{91}$$

which can be written as:

$$E[h(t)]=E[h_{\text{opt}}(t)]-2\epsilon I_1+\epsilon^2 I_2 \tag{92}$$

where the second term on the right-hand side of equation 92 corresponds to the second and third terms on the right-hand side of equation (91), and the third term on the right-hand side of equation 102 corresponds to the fourth term on the right-hand side of equation 91.

For $h_{\text{opt}}(t)$ to be a true optimum, it is necessary for the condition of equation 90 to hold and hence for:

$$\left(I_1-\frac{\epsilon}{2}I_2\right)\leq 0 \tag{93}$$

for any value of $h'(t)$ and any nonnegative value of ϵ. Because the fourth term on the right-hand side of equation 91 is a perfect square, then I_2 must also be a perfect square, and thus for arbitrarily small values ϵ the condition for

optimality reduces to:

$$I_1 \leq 0 \tag{94}$$

I_1 can be seen from an inspection of the second and third terms on the right-hand side of equation 91b to be:

$$I_1 = \int_0^\infty h'(\tau)\phi_{xy}(\tau)d\tau - \int_0^\infty h'(\tau_1) \int_0^\infty h_{\text{opt}}(\tau_2)\phi_{xx}(\tau_1-\tau_2)d\tau_2\, d\tau_1 \tag{95}$$

If I_1 as given above is either zero or negative, then the condition of equation 94, and hence of equation 90, is satisfied. If, however, I_1 is negative for a given function $h'(t)$, then it will according to equation 95 be positive if the sign of $h'(t)$ is changed. Consequently, unless I_1 is zero, it is possible to find a function $h'(t)$ which makes I_1 positive and therefore violates the condition of equation 94 for an arbitrarily small value of ϵ. In these circumstances, the function $h_{\text{opt}}(t)$ would not be truly the optimum causal linear response. Accordingly, the condition for the optimum response is:

$$I_1 = 0 \tag{96}$$

Since the condition must hold for any arbitrary causal function $h'(t)$, then we must have:

$$\phi_{xy}(\tau_1) - \int_0^\infty h_{\text{opt}}(\tau_2)\phi_{xx}(\tau_1-\tau_2)\, d\tau_2 = 0 \tag{97}$$

Because $h'(t)$ was defined as a causal function, the above relationship need only hold for nonnegative values of τ_1.

The condition represented by equation 97 is frequently referred to as the Wiener-Hopf equation, and the solution of this equation gives the optimal causal linear response for a system whose input and output are in the form of continuous time series. It can be seen that determination of the optimum linear response in the least squares sense depends not on the original functions but only on the autocorrelation function of the input and the cross correlation function between the input and the output.

Problems on Identification Based on Continuous Data

1. Find the Fourier coefficients for the functions given in table 1, of the Appendix.
2. Find the Fourier transform and Laplace transform for the functions chosen in problem 1.
3. Find the first 4 moments and cumulants for the functions chosen in problem 1.
4. Find the Laguerre coefficients for the functions chosen in problem 1.

5. The input and output to a linear time-invariant system are given on Appendix table 1 by functions 12 and 13, respectively. Find the impulse response of the system by some method of system identification suitable for continuous data.

6. Find the impulse response for the data of problem 5. Use a different method of system identification.

7. In Appendix table 1, the output from a linear time-invariant system is given by function 16 and the input, by function 15. Find the impulse response of the system by some method of system identification.

8. Find the impulse response by a second method of system identification for the data of problem 7.

9. Compare the results of problems 5 and 6 or problems 7 and 8, and the difficulties of the two methods used and give reasons for the differences found.

10. Write a general computer program for the identification of linear time-invariant systems for which the data are available in continuous form.

Literature Cited

(1) ANDERSSEN, A. S., and WHITE, E. P.
1969. THE ANALYSIS OF RESIDENCE OF TIME DISTRIBUTION MEASUREMENTS USING LAGUERRE FUNCTIONS. Canad. Jour. Chem. Engin. 47: 288–294.

(2) ASELTINE, J. A.
1958. TRANSFORM METHODS IN LINEAR SYSTEMS ANALYSIS. 300 pp., illus. New York.

(3) BAYAZIT, M.
1964. APPLICATION OF POWER SPECTRUM ANALYSIS TO UNIT HYDROGRAPH DERIVATION. Tech. Univ. Istanbul Bul. 17(1).

(4) ———
1965. A NUMERICAL METHOD TO DETERMINE THE UNIT HYDROGRAPH. Tech. Univ. Istanbul Bul. 18(1).

(5) ———
1966. INSTANTANEOUS UNIT HYDROGRAPH DERIVATION BY SPECTRAL ANALYSIS AND ITS NUMERICAL APPLICATION. Central Treaty Organization Symposium on Hydrology and Water Resource Development Proceedings. Ankara.

(6) BELLMAN, R. E., KALABA, R. E., and LOCKETT, J.
1966. NUMERICAL INVERSION OF THE LAPLACE TRANSFORM. 249 pp., illus. New York.

(7) BLANK, D., and DELLEUR, J. W.
1968. A PROGRAM FOR ESTIMATING RUNOFF FOR INDIANA WATERSHEDS, PART 1. LINEAR SYSTEMS ANALYSIS IN SURFACE HYDROLOGY AND ITS APPLICATION TO INDIANA WATERSHEDS. Tech. Rpt. 4, Water Resources Res. Center, Purdue University, Ind.

(8) DISKIN, M. H.
1967. A LAPLACE TRANSFORM PROOF OF THE THEOREM OF MOMENTS FOR THE INSTANTANEOUS UNIT HYDROGRAPH. Water Resources Res. 3(2): 385–388.

(9) DOOGE, J. C. I.
1965. ANALYSIS OF LINEAR SYSTEMS BY MEANS OF LAGUERRE FUNCTIONS. Soc. Indus. and Appl. Math., Jour. Control 2(3): 396–408.

(10) ———
(N.D.) LAGUERRE ANALYSIS OF SYNTHETIC DATA. Dept. Civ. Engin., Univ. Col. Cork, Ireland.

(11) EAGLESON, P. S., MEJIA-R, R., and MARCH, F.
1966. THE COMPUTATION OF OPTIMUM REALIZABLE UNIT HYDROGRAPHS. Water Resources Res. 2(4): 755–764.

(12) GARDNER, M. F., and BARNES, J. L.
1942. TRANSIENTS IN LINEAR SYSTEMS. v. 1: lumped constant systems. 389 pp., illus. New York.

(13) GUILLEMIN, E. A.
1949. MATHEMATICS OF CIRCUIT ANALYSIS. 590 pp., illus. Cambridge, Mass.

(14) KENDALL, M. G., and STUART, A.
1958. THE ADVANCED THEORY OF STATISTICS. V. 1, Ch. III: moments and cumulants. London.

(15) LEE, Y. W.
1960. STATISTICAL THEORY OF COMMUNICATION. 509 pp., illus. New York.

(16) LEVI, E., and VALDES, R.
1964. A METHOD FOR DIRECT ANALYSIS OF HYDROGRAPHS. Jour. Hydrol. 2(2): 182–190.

(17) NASH, J. E.
1959. SYSTEMATIC DETERMINATION OF UNIT HYDROGRAPH PARAMETERS. Jour. Geophys. Res. 64(1): 111–115.

(18) O'DONNELL, T.
1960. INSTANTANEOUS UNIT HYDROGRAPH DERIVATION BY HARMONIC ANALYSIS. Internatl. Assoc. Sci. Hydrol. Pub. 51: 546–557.

(19) ———
1966. METHODS OF COMPUTATION IN HYDROGRAPH ANALYSIS AND SYNTHESIS. PART III, RECENT TRENDS IN HYDROGRAPH SYNTHESIS. TNO Proc. and Inform. Note 13. The Hague.

(20) PAPOULIS, A.
1962. THE FOURIER INTEGRAL AND ITS APPLICATIONS. 327 pp. New York.

(21) PAYNTER, H. M.
1952. METHODS AND RESULTS FROM MIT STUDIES IN UNSTEADY FLOW. Boston Soc. Civ. Engin. Jour. 39(2): 120–165.

(22) RESTREPO, J. C. O., and EAGLESON, P. S.
1965. OPTIMUM DISCRETE LINEAR HYDROLOGIC SYSTEMS WITH MULTIPLE INPUTS. Mass. Inst. Technol., Hydrodyn. Lab. Rpt. 80.

(23) ROBERTS, G. E., and KAUFMAN, H.
1966. TABLE OF LAPLACE TRANSFORMS. 365 pp., illus. Philadelphia.

LECTURE 6: IDENTIFICATION BASED ON DISCRETE DATA

Basic System Equations

Because hydrologic systems are continuous systems with continuously defined inputs and outputs, it might be thought that the methods of system identification described in lecture 5 would be the most appropriate techniques to use in identifying hydrologic systems. In many cases, however, hydrologic data are only available in discrete or quantized form. A good deal of rainfall data is only reported as hourly volumes, and the input in these cases is represented by a number of square pulses because all that we know are the volumes (or the mean rates) of rainfall during each interval. Modern recording equipment is usually digital in form, but the frequency of sampling is so high that the records could, if necessary, be treated mathematically as a continuous record without appreciable error. Even where a continuous or virtually continuous record is available, it may be uneconomic to process the complete record. In this case, the record will be sampled and the sample data processed in some way. The data, though actually recorded in continuous form, must be considered discrete data for the purpose of analysis.

If an attempt is made to analyze a square pulse by a series of continuously defined orthogonal functions, serious difficulties of representation arise. Even if a large number of terms is used in the series, the discontinuities at the beginning and the end of the pulse will not be faithfully reproduced and oscillations, known as *Gibbs' oscillations*, will occur. In harmonic analysis, certain mathematical techniques are available for the smoothing of these oscillations. It seems preferable, however, to accept the discontinuous nature of the data, and instead of looking for the impulse response of the system, to try and identify the response of the system to a square pulse of standard length. In effect, this means seeking the finite period unit hydrograph rather than the IUH and, thus, returning to the basic concept used during the original development of unit hydrograph methods.

If we define the pulse response $h_D(t)$ as response of the system to an input of unit volume occurring at a uniform rate for a period D, then as expressed in equation 24a, lecture 1, the relationship between input and output is given by:

$$y(t) = \sum_{\sigma D=0}^{\sigma D=t} X(\sigma D) h_D(t-\sigma D) \tag{1}$$

where $X(\sigma D)$ is the volume of input in the interval from time σD to $(\sigma+1)D$ and $y(t)$ is the continuous output. In the above case, both the finite pulse response and the output are continuously defined.

If the pulse response is only defined at certain intervals; then as expressed in lecture 1, equation 27a, the relationship between input, output, and pulse response is defined in terms of the discrete variables s and σ:

$$y(sD) = \sum_{\sigma=0}^{\sigma=s} X(\sigma D)h_D(sD-\sigma D) \tag{2a}$$

which can be written as:

$$y(s) = \sum_{\sigma=0}^{\sigma=s} X(\sigma)h_D(s-\sigma) \tag{2b}$$

where the interval between ordinates is D. It is necessary for the interval at which the impulse response and output are determined to be a submultiple or a multiple of the unit period of input, D. Otherwise, interpolation will be necessary before the ordinates making up the output are summed together. If the output is taken in block form, as in Bernard's distribution graph, then we have:

$$y(s) = \sum_{\sigma=0}^{\sigma=s} X(\sigma)\mathrm{d}_D\, s-\sigma) \tag{2c}$$

where d_D represents the distribution graph, that is, the distribution of volume of output for the unit period of input.

The above equations are for the case where the input is defined in terms of volumes. If the input is defined in terms of discrete ordinates, then the equation corresponding to equation 2b would be:

$$y(s) = \sum_{\sigma=0}^{\sigma=s} x(\sigma)h_D(s-\sigma)D \tag{2d}$$

for the discrete input $x(s)$.

The convolution relationship of equation 2 can be written in matrix form. (See lecture 1.)

$$\{y\}_{p+1,1} = [x]_{p+1,n+1}\{h\}_{n+1,1} \tag{3}$$

where y is the vector of outputs, X is the matrix of inputs, and h is the vector of the pulse response. The general structure of the matrix X formed from the input vector x is indicated in lecture 1. A typical matrix of inputs is formed as

follows:

$$X=\begin{bmatrix} x_0 & 0 & 0 & 0 \\ x_1 & x_0 & 0 & 0 \\ x_2 & x_1 & x_0 & 0 \\ x_3 & x_2 & x_1 & x_0 \\ x_4 & x_3 & x_2 & x_1 \\ 0 & x_4 & x_3 & x_2 \\ 0 & 0 & x_4 & x_3 \\ 0 & 0 & 0 & x_4 \end{bmatrix} \tag{4a}$$

The above example shows the case where the input lasts for five unit periods and the pulse response has four ordinates; it illustrates the general method of forming the matrix which might be called the convolution form of matrix. For the above case, the output has eight ordinates in accordance with the general relationship $p=n+m$, where there are m blocks of input, $n+1$ ordinates of the pulse response, and $p+1$ ordinates of output. It is equally possible to leave the input as a vector and convert the impulse response into a matrix:

$$\{y\}_{p+1,1}=[H]_{p+1,m+1}\{x\}_{m+1,1} \tag{4b}$$

The form given in equation 4a is most convenient in the identification of the pulse response; form 4b is most convenient where a derived pulse response has been adjusted to eliminate anomalies and where it is required to ascertain what corresponding adjustment in the input should be made.

This lecture is concerned with the various methods which might be employed to solve equations of the forms given above. In contrast to the case of continuous data where the solution of an integral equation was called for, in discrete or quantized data it is only necessary to solve a set of simultaneous equations. Consequently, we would expect that matrix methods would be applicable to the identification problem for discrete data. We would also expect that discrete versions of the various transform methods and of time series analysis described in lecture 5 would also be available. These are discussed in the remainder of the lecture.

Matrix Methods of Identification

If the available input and output were completely free from error there would be no difficulty in determining the ordinates of the pulse response or finite period unit hydrograph. The set of simultaneous equations given in matrix form in equation 4a can be written out as:

$$y_0 = x_0 h_0 \tag{5a}$$

$$y_1 = x_1 h_0 + x_0 h_1 \tag{5b}$$

$$y_2 = x_2 h_0 + x_1 h_1 + x_0 h_2 \tag{5c}$$

$$\vdots$$

$$y_i = x_i h_0 + \cdots + x_0 h_i \tag{5i}$$

$$\vdots$$

$$y_{m-1} = x_{m-1} h_0 + x_{m-2} h_1 + \cdots + x_0 h_{m-1}$$

$$y_m = x_m h_0 + \cdots + x_0 h_m \tag{5m}$$

$$\vdots$$

$$y_{p-1} = x_m h_{n-1} + x_{m-1} h_n \tag{5n}$$

$$y_p = \qquad x_m h_n \tag{5p}$$

If the output and input are known, then all the values of the vector $x_0, x_1, x_2 \ldots\ldots x_m$ and of the output vector $y_0, y_1, y_2 \ldots\ldots y_{p-1}, y_p$ are known. The values of the unknown ordinates of the pulse response or unit hydrograph, that is, $h_0, h_1, h_2 \ldots\ldots h_{n-1}, h_n$ can be determined successively from the set of equations 5. Thus, equation 5a is used to obtain the value of h_0; substitution of this value in equation 5b enables us to calculate the value of h_1; and so on until all the unknown ordinates of h have been determined. Where there is no error in the data, the values obtained by the solution of the first n equations automatically satisfy the remaining equations. This method of solution by forward substitution is equivalent to solving a subset of the equations 5a to 5p in the form:

$$\{y\}_{(n+1)} = [X]_{(n+1)} \{h\}_{(n+1)} \tag{6}$$

which indicates that only the first $(n+1)$ values of output and the first $(n+1)$ rows of the X matrix are used. There are now the same number of equations as unknowns, so that direct algebraic solution is possible. We also note that the matrix of inputs X is now a square matrix and this can, therefore, be inverted. There is, of course, no necessity to use the first $(n+1)$ rows to form the $(n+1)$ by $(n+1)$ matrix. Any $(n+1)$ rows could be used, but if the first $(n+1)$ rows or the last $(n+1)$ rows are used, the matrix is triangular and therefore more easily inverted.

An alternative way of equating the number of equations and the number of unknowns is to treat the unit hydrograph or pulse response as if the num-

ber of its ordinates were equal to the number of ordinates of runoff. In this case, the matrix equation becomes:

$$\{y\}_{p+1}=[X]_{p+1}\{h\}_{p+1} \tag{7}$$

Again, the equations can be readily solved by direct algebraic methods. In the absence of errors in the input or output data, only the first n-ordinates will have significant values, and the ordinates of the unit hydrograph between h_{n+1} and h_p will come out as identically zero.

The rule for calculating any ordinate of forward substitution (that is, the use of the first $(n+1)$ equation is:

$$h_i=\frac{y_i-\sum_{j=0}^{i-1}x_{i-j}h_j}{x_0} \quad \text{for} \quad i\leq m \tag{8a}$$

$$h_i=\frac{y_i-\sum_{j=i-m}^{i-1}x_{i-j}h_j}{x_0} \quad \text{for} \quad i\geq m \tag{8b}$$

which can be solved successively for $i=\phi, 1, 2, \ldots\ldots n$.

For backward substitution (that is, the use of the last $(n+1)$ equations), the corresponding formulas are:

$$h_{n-i}=\frac{y_{p-i}-\sum_{j=0}^{i-1}x_{m-i+j}h_{n-j}}{x_m} \quad \text{for} \quad i\leq m \tag{8c}$$

$$h_{n-i}=\frac{y_{p-i}-\sum_{j=i-m}^{i-1}x_{m-i+j}h_{n-j}}{x_m} \quad \text{for} \quad i\geq m \tag{8d}$$

which can be solved successively for $i=\phi, 1, 2\ldots\ldots n$.

In the absence of errors in the data and of errors of computation, it is immaterial which set of $(n+1)$ equations are used to solve for the $(n+1)$ unknown ordinates of the unit hydrograph. The direct solution by forward substitution (or backward substitution) is, however, unreliable in practice due to the presence of error. It can readily be shown by the use of synthetic data that if errors occur in the measurement of the input or the output, *unrealistic* unit hydrograph ordinates are obtained in the solution. We are thus faced with the problem of finding an optimum solution for the unit hydrograph using all the information available.

The matrix method based on least squares solves the problem in the form of equation 4a. It assumes that the length of the unit hydrograph is known by subtracting the length of the input from the length of the output and, therefore, that the ordinates of the unit hydrograph between h_{n+1} and h_p are zero. In the presence of error, therefore, we must restrain these particular ordinates and distribute the error on the other ordinates.

The method of least squares is based on minimizing the sum of the squares

of the residuals between the actual output and the output predicted by using any particular value of h. The residuals are given by the column vector:

$$\{r\}_{p+1,1}=\{y\}_{p+1,1}-[X]_{p+1,n+1}\{h\}_{n+1,1} \tag{9a}$$

$$=\{y-Xh\}_{p+1,1} \tag{9b}$$

the sum of the squares of these residuals is most conveniently got by using the inner product, that is, by multiplying r by its transpose r^T. Taking the inner product (see page 99, lecture 1) and using the rule for the transpose of a product, we obtain:

$$\sum r_i^2=r^Tr=[y^T-h^TX^T][y-Xh] \tag{10}$$

On multiplying out the terms, we get:

$$\sum r^2{}_i=y^Ty-y^TXh-h^TX^Ty+h^TX^TXh \tag{11}$$

Since h and y are column vectors, their transposes will be row vectors, and, consequently, the second and third terms on the right-hand side of equation 11 are scalar in form. Since a scalar transposes into itself, the two terms must be equal so that we can write:

$$\sum r^2{}_i=y^Ty-2h^TX^Ty+h^TX^TXh \tag{12}$$

The problem is to choose the ordinates of the response vector h so as to minimize the expression given in equation 12. For ordinary functions, this can be done by taking each ordinate in turn and setting the partial derivatives, with respect to that particular ordinate equal to zero. However, the compression of vector notation may be used. Because the first term we are differentiating does not involve h, the derivative for this term will be zero. Vector differentiation of the second term on the right-hand side of equation 12 with respect to h resembles the ordinary differentiation of the first power of a function. Similarly, vector differentiation of the third term on the right-hand side of equation 12 with respect to h resembles the ordinary differentiation of the second power of a function. The result of differentiation with respect to h can be readily verified. Setting the result equal to zero is given by:

$$-2X^Ty+2X^TXh=0 \tag{13a}$$

or

$$X^TXh=X^Ty \tag{13b}$$

The vector h which satisfies equation 13b makes $\sum r_i^2$ a minimum. It is therefore the best least squares solution to the original set of equations 5a to 5p. To solve equation 13b for h, it is necessary to invert the matrix given by:

$$Z=X^TX \tag{14a}$$

thus obtaining the solution

$$h = Z^{-1}X^{T}y \tag{14b}$$

Since the matrix formed by multiplying any matrix by its transpose is necessarily a square matrix, this inversion can be carried out.

Note that the sum of the squares of the residuals for the above solution is not an absolute minimum. It is a minimum subject to the restraint that h has a base length from zero to $n+1$, that is, that the values of the ordinates from h_{n+1} to h_p are zero. The effect of other constraints and of errors generally will be discussed later in the lecture.

Discrete Transform Methods

Transform methods are available for handling discrete data which correspond to the transform methods for continuous data discussed in lecture 5, "Identification Based on Continuous Data." Thus the classical Fourier series can be replaced by the finite Fourier series, which will reproduce exactly the functions involved at the sampled points and can be used to interpolate trigonometrically between these points. In place of the Laplace transform, we have the Z-transform which was developed for use with sampled-data systems. Dooge (written commun., 1966) has derived a discrete analog of the Laguerre methods of analysis, but this has not yet been fully developed or published.

The method of harmonic analysis has been applied to hydrologic data by O'Donnell (*9*, *10*). If an output is specified at a number of equidistant discrete points, then it can be fitted exactly at these points by a function of the form:

$$y(s) = \frac{A_0}{2} + \sum_{k=1}^{k=p} A_k \cos\left(k\frac{2\pi s}{n}\right) + \sum_{k=1}^{k=p} B_k \sin\left(\frac{k2\pi s}{n}\right) \tag{15}$$

where $n=2p+1$ is the number of data points. Since there are only n-pieces of information, it is impossible to derive more than n-meaningful coefficients A_k and B_k for the data. Since sines and cosines are orthogonal under summation, the coefficients can be determined from:

$$A_k = \frac{2}{n}\sum_{s=0}^{n-1} y(s) \cos\left(\frac{k2\pi s}{n}\right) \tag{16a}$$

$$B_k = \frac{2}{n}\sum_{s=0}^{n-1} y(s) \sin\left(\frac{k2\pi s}{n}\right) \tag{16b}$$

where k can take on the integral values $0, 1, 2 \ldots . p-1, p$. The above formu-

lation can also be expressed in the exponential form:

$$y(s) = \sum_{k=-p}^{p} C_k \exp\left(\frac{ik2\pi s}{n}\right) \tag{17a}$$

$$C_k = \frac{1}{n} \sum_{s=0}^{n-1} y(s) \exp\left(\frac{-ik2\pi s}{n}\right) \tag{17b}$$

For a linear time-invariant system which is causal and has an isolated input, the discrete ordinates of the input, output, and pulse response are connected by:

$$y(sD) = \sum_{\sigma=0}^{\sigma=s} X(\sigma D) h_D(sD-\sigma D) \tag{18a}$$

where X represents the volume of input in successive unit periods of length, D; h_D represents the finite period unit hydrograph for the unit period (D) defined at intervals equal to the unit period; and y represents the output defined at intervals equal to the unit period (D). For convenience, the unit period can be taken as the unit of time and the relationship written as:

$$y(s) = \sum_{\sigma=0}^{\sigma=s} X(\sigma) h_D(s-\sigma) \tag{18b}$$

If the input is of finite duration and the memory of the system is finite, then we can use finite Fourier series in the same way as infinite Fourier series were used in lecture 5. The development is analogous and will not be repeated in detail. The discrete functions representing the input and the output are assumed to be periodic with a period equal to nD. Since the input is periodic, it is necessary to write the relationship between input pulse response and output as:

$$y(s) = \sum_{\sigma=s-n+1}^{\sigma=s} X(\sigma) h_D(s-\sigma) \tag{18c}$$

The linkage equation can then be found in similar manner to that indicated by equations 11 to 16, lecture 5.

By substituting equation 18c in equation 17c, reversing the order of summation, and using the orthogonality relationship twice, it can be shown that in the discrete case, we have the linkage relationship:

$$C_k = nC_k \cdot \alpha_k \tag{19}$$

which is the same as the linkage equation given by equation 16 of lecture 5, except for the fact that the symbol n is used for the period in the discrete case, the symbol T for the period in the continuous case. For the expansion in trigonometrical rather than exponential form, the linkage relationship takes the form:

$$A_k = \frac{n}{2}(a_k\alpha_k - b_k\beta_k) \tag{20a}$$

$$B_k = \frac{n}{2}(a_k\beta_k - b_k\alpha_k) \tag{20b}$$

which correspond to equations 18b and 18c, respectively, in lecture 5.

The fact that the trigonometrical functions are orthogonal under both integration and summation results in the same linkage relationship for continuous and discrete data. The coefficients appearing in equations 19 or 20 of the present lecture are frequently referred to as harmonic coefficients and the coefficients appearing in equation 18 of lecture 5 are referred to as Fourier coefficients. The differences between the two cases should, however, be clearly recognized. Firstly, the coefficients α_k and β_k in equation 20 of this lecture, define the finite period unit hydrograph $h_D(t)$; the corresponding coefficients in equation 18, lecture 5, define the instantaneous unit hydrograph $h_0(t)$. Secondly, the coefficients of equation 20 of this lecture are finite in number because only as many coefficients as there are data points can be determined altogether. For continuous functions, there is no limit to the number of coefficients which can be calculated if required. Thirdly, the coefficients of equation 20 of this lecture, when substituted into the finite Fourier expansion, define the pulse response h_D at discrete points which are equally spaced at the unit interval, D; whereas, the coefficients derived in lecture 5 define the IUH continuously.

If a function only exists at discrete points, or is only known at discrete points, it is not possible to obtain its Laplace transform directly. Such a function can be considered as being defined by:

$$f(t) = \sum_{n=0}^{\infty} f(t)\,\delta(t-nT) \tag{21}$$

where n is an integer and T is the interval between data points. If the Laplace transform is now taken, we have:

$$\pounds[f(t)] = \sum_{n=0}^{\infty} f(nT)\,e^{-snT} \tag{22}$$

It is customary to write:

$$Z = \exp(sT) \tag{23}$$

and hence to write what is known as the Z-transform of the discrete variable as:

$$F(Z) = Z[f(nT)] = \sum_{n=0}^{\infty} f(nT)\,Z^{-n} \tag{24}$$

The properties of the Z-transform (*4*) are similar to those of the Laplace transform, in particular, for a linear time-invariant causal system given by:

$$y(s) = \sum_{\sigma=0}^{\sigma=s} x(\sigma)h(s-\sigma) \tag{25}$$

We have the following simple relationship between the Z-transform of the input:

$$Y(Z) = H(Z) \cdot X(Z) \tag{26}$$

If $y(s)$ and $x(s)$ are given numerically, it is possible to compute $Y(Z)$ and $X(Z)$ and, hence, to determine the Z-transform of the pulse response:

$$H(Z) = \frac{Y(Z)}{X(Z)} \tag{27}$$

If $H(Z)$ can be expanded in inverse powers of Z, the coefficients of the expansion will give the ordinates of $h(s)$ since by definition:

$$H(Z) = h(0) + h(1)Z^{-1} + h(2)Z^{-2} + \ldots\ldots \tag{28}$$

In practice, however, it is likely that, as in the Laplace transform[1] the Z-transform will not be easily inverted in practical cases where we have numerical data rather than a mathematical function.

The other transform method discussed in this lecture corresponds to the Laguerre analysis of systems with continuous inputs and outputs. If an attempt is made to represent a square pulse by a series of Laguerre functions, the discontinuity cannot be well represented even if the number of terms in the expansion is quite high; for 50 terms, the oscillations will be of the order of 25 percent of the height of the pulse. Accordingly, if it is wished to use quantized data, the method of Laguerre analysis described in lecture 5 is no longer adequate without modification. At first, it was hoped that the Laguerre functions might be orthogonal under summation as well as integration, as with trigonometric functions. Unfortunately, this did not prove to be the case, and it was necessary to derive the discrete analog of the Laguerre functions.

Though some books on numerical analysis mention that discrete analogs of the classical continuous orthogonal polynomials do exist, no description of these was available in any of the literature cited. Eventually, the form of the polynomials orthogonal under summation from zero to infinity with respect to a damping factor $\exp(-s)$ was derived from first principles. It is

---

[1] DOOGE, J. C. I. LINEAR THEORY OF OPEN CHANNEL FLOW, III: MOMENTS AND CUMULANTS. Dept. Civ. Engin., University College, Cork, Ireland. 1967. [Unpublished report.]

easier, however, in retrospect to derive the form of the discrete analog to the Laguerre function by an analogy between discrete and continuous operations.

Integration in the continuous case becomes summation in the discrete case and differentiation in the continuous cases is replaced by forward differencing in the discrete case. The Laguerre polynomial[2] is defined by:

$$L_n(t) = \sum_{k=0}^{k=n} (-1)^k \binom{n}{k} \frac{t^k}{k!} \tag{29a}$$

In the above equation, the continuous variable t occurs in the form $t^k/k!$. This function has the property that when differentiated with respect to t, it maintains the same form but with the order reduced by one degree. The analogous discrete polynomial might be expected to be that function of the discrete variable s which has the analogous discrete property, that is, the function when forward differenced with respect to s maintains the same form but with the order reduced by one degree. It can be verified that the form of discrete function required is the binomial coefficient $\binom{s}{k}$. Hence, we would expect the discrete analog to the Laguerre polynomial to be of the form:

$$M_n(s) = \sum_{k=0}^{k=n} (-1)^k \binom{n}{k} \binom{s}{k} \tag{29b}$$

It can be shown that the above expression is a Meixner polynomial with a value of $b=0$ and $c=\frac{1}{2}$.

The Laguerre polynomials defined by equation 29a are orthogonal in the range zero to infinity with respect to the weighting factor $\exp(-t)$, that is,

$$\int_0^\infty e^{-t} L_m(t) L_n(t) = \delta_{mn} \tag{30a}$$

If the Meixner polynomials are to be written in similar form, it is necessary not only to replace the integration by a summation but also to find the discrete analog of the weighting factor $\exp(-t)$. The reciprocal of the weighting function in the continuous case, $\exp(t)$, differentiates into itself. This suggests a function which forward differentiates into itself as a discrete analog. It may be readily shown that 2^s has such a property and consequently, $\frac{1}{2}^s$ may be tried as a weighting factor. When this is done one obtains the orthogonal relationship:

$$\sum_{s=0}^{s=\infty} (\tfrac{1}{2})^s M_m(s) M_n(s) = 2^{n+1} \delta_{mn} \tag{30b}$$

[2] Op. cit. p. 88, lecture 1, and p. 173, lecture 5.

The normalized orthogonal function in the continuous case is:

$$f_n(t) = e^{-t/2} \sum_{k=0}^{k=n} (-1)^k \binom{n}{k} \frac{t^k}{k!} \tag{31a}$$

and the normalized orthogonal function in the discrete case is:

$$f_n(s) = (1/2)^{(s+n+1)/2} \sum_{k=0}^{k=n} (-1)^k \binom{n}{k} \binom{s}{k} \tag{31b}$$

The function given in equation 31b may be described as a Meixner function and its properties explored by the use of the Z-transform (*6*).

To derive a method of Meixner analysis, it is necessary to determine first of all the effect of convoluting one Meixner function with another as follows:

$$g(s) = \sum_{\sigma=0}^{\sigma=s} f_m(\sigma) f_n(s-\sigma) \tag{32}$$

It can be shown that:

$$g(s) = (2)^{1/2} f_{m+n}(s) - f_{m+n+1}(s) \tag{33}$$

Again the result is similar to that for Laguerre functions except for the scale factor $2^{1/2}$. The linkage equation is derived in a similar manner as for Laguerre functions and is given by:

$$A_p = \sum_{k=0}^{k=p} (2)^{1/2} \alpha_k a_{p-k} - \sum_{k=0}^{k=p-1} \alpha_k a_{p-1-k} \tag{34}$$

which corresponds with equation 73 of lecture 5. For the identification problem, it is necessary to determine successively the values of the Meixner coefficients for the response functions. These are given by:

$$\alpha_p a_0 = \sum_{k=0}^{k=p} (1/2)^{(p-k+1)/2} A_k - \sum_{k=0}^{k=p-1} \alpha_k a_{p-k} \tag{35}$$

The method of Meixner analysis is still under development and so far has only been applied to synthetic data. There is some indication that it is not as numerically stable as the Laguerre analysis of continuous data. In Meixner analysis, as in Laguerre analysis, it is necessary to choose an appropriate time scale to represent the functions involved by a relatively small number of coefficients.

Time-Series Analysis of Discrete Data

The method of time series analysis developed by Wiener (*7*) and used in the theory of communication has been applied to discrete hydrologic data by the group working at the Massachusetts Institute of Technology under

Eagleson (*3*). The problem is to determine for a given set of discrete inputs and outputs, the causal linear response which is optimal in the least squares sense. It is necessary to define the discrete analogs of the autocorrelation and cross correlations defined by equation 82 and 83 of lecture 5 for the continuous case. The autocorrelation function for a discrete variable $f(s)$ is defined as the limit:

$$\phi_{ff}(k) = \frac{1}{n} \sum_{s=-p}^{p} f(s)f(s+k) \quad \text{as} \quad p \to \infty \tag{36a}$$

where $n=2p+1$ is the number of data points. The cross correlation function between two discrete variables $f(s)$ and $g(s)$ is defined as the limit:

$$\phi_{fg}(k) = \frac{1}{n} \sum_{s=-p}^{p} f(s)g(s+k) \quad \text{as} \quad p \to \infty \tag{36b}$$

For a causal linear time-invariant system, we have:

$$y(s) = \sum_{\sigma=-\infty}^{s} X(\sigma)h_D(s-\sigma) \tag{37a}$$

or

$$y(s) = \sum_{\sigma=0}^{\infty} X(s-\sigma)h_D(\sigma) \tag{37b}$$

where D is the interval between the equally spaced discrete or quantized data (and consequently also the unit period of the finite period unit hydrograph or pulse response $h_D(s)$), which will enable us to predict the output with minimum error. The individual error prediction for the single ordinate is given by:

$$r_i = y_i - \sum_{\sigma=0}^{\infty} X(i-\sigma)h_D(\sigma) \tag{38}$$

where i is the integer denoting the ordinate of output concerned. For a continuous record which has been sampled or of discrete or quantized data, we wish to minimize the least squares error, that is,

$$E[h(s)] = \frac{1}{n} \sum_{i=-p}^{p} (r_i)^2 = \text{minimum} \tag{39a}$$

If this is to be done by manipulation of the ordinates of the response function, then we have the condition:

$$\frac{\delta}{\delta h(j)} \sum_{i=-p}^{p} r_i^2 = \sum_{i=-p}^{p} 2r_i \frac{\delta r_i}{\delta h(j)} = 0 \tag{39b}$$

It is clear from equation 38 that for every value of j greater than 0:

$$\frac{\partial r_i}{\partial h(j)} = -X(i-j) \tag{40}$$

so that

$$-r_i \cdot \frac{\partial r_i}{\partial h(j)} = X(i-j)y(i) - X(i-j) \sum_{\sigma=0}^{\infty} h_D(\sigma) X(i-\sigma) \tag{41}$$

The criterion of equation 39 can now be written as:

$$\sum_{i=-p}^{p} X(i-j)y(i) - \sum_{i=-p}^{p} X(i-j) \sum_{\sigma=0}^{\infty} h_D(\sigma)(i-\sigma) = 0 \tag{42}$$

The above relationship must hold for all values of j greater than 0. Reversing the order of summation in the second term gives:

$$\sum_{i=-p}^{p} X(i-j)y(i) - \sum_{\sigma=0}^{\infty} h_D(\sigma) \sum_{i=-p}^{p} X(i-j)X(i-\sigma) = 0 \tag{43}$$

Using the definition of autocorrelation and cross correlation for discrete functions given by equations 36a and 36b above, equation 43 can be written as:

$$\phi_{xy}(j) = \sum_{\sigma=0}^{\infty} h_D(\sigma)\phi_{xx}(j-\sigma) \tag{44}$$

provided that the value of j is zero or positive. This is the discrete form of the Wiener-Hopf equation used by Eagleson (*3*) in the analysis of hydrologic systems.

Where we are dealing with isolated inputs and systems of finite memory we also have isolated outputs. In this case, the correlation method of analysis of time series can be shown to be equivalent to the least squares method. As shown in lecture 6, page 187, the least squares method arranges the input and output data in the form:

$$X^T y = X^T X h \tag{45}$$

where the matrix X is of the form given by equation 4b of the present lecture, that is, the input vector has been used to form a convolution-type matrix. Accordingly, for the example given on page 39, lecture 1, and page 181, lecture 6, the left-hand side of equation 45 will be of the form:

$$X^T y = \begin{bmatrix} x_0 & x_1 & x_2 & x_3 & x_4 & 0 & 0 & 0 \\ 0 & x_0 & x_1 & x_2 & x_3 & x_4 & 0 & 0 \\ 0 & 0 & x_0 & x_1 & x_2 & x_3 & x_4 & 0 \\ 0 & 0 & 0 & x_0 & x_1 & x_2 & x_3 & x_4 \end{bmatrix} \begin{bmatrix} y_0 \\ y_1 \\ y_2 \\ y_3 \\ y_4 \\ y_5 \\ y_6 \\ y_7 \end{bmatrix} \tag{46}$$

In the above example, the matrix X has four rows and eight colums, and the column vector y has eight rows. The result of multiplying them together will be to produce a column vector with four rows. If we follow the rules of vector multiplication, these four rows will be given by:

$$x_0y_0+x_1y_1+x_2y_2+x_3y_3+x_4y_4=\phi_{xy}(0) \tag{47a}$$

$$x_0y_1+x_1y_2+x_2y_3+x_3y_4+x_4y_5=\phi_{xy}(1) \tag{47b}$$

$$x_0y_2+x_1y_3+x_2y_4+x_3y_5+x_4y_6=\phi_{xy}(2) \tag{47c}$$

$$x_0y_3+x_1y_4+x_2y_5+x_3y_6+x_4y_7=\phi_{xy}(3) \tag{47d}$$

The left-hand side of equation 45 is therefore seen to be of the same form as the left-hand side of equation 44.
Similarly, it can be shown that:

$$X^TX=\begin{bmatrix} \phi_{xx}(0) & \phi_{xx}(-1) & \phi_{xx}(-2) & \phi_{xx}(-3) \\ \phi_{xx}(1) & \phi_{xx}(0) & \phi_{xx}(-1) & \phi_{xx}(-2) \\ \phi_{xx}(2) & \phi_{xx}(1) & \phi_{xx}(0) & \phi_{xx}(-1) \\ \phi_{xx}(3) & \phi_{xx}(2) & \phi_{xx}(1) & \phi_{xx}(0) \end{bmatrix} \tag{48}$$

which can be seen to be a convolution-type matrix formed from the autocorrelation coefficients of the input vector. Because the multiplication of this convolution-type vector by the optimum response vector h is equivalent to the convolution of the input autocorrelation coefficient vector and the response vector, the right-hand side of equation 45 is equivalent to the right-hand side of equation 44.

In time series analysis and the use of equation 44, the number of equations is not limited as in equation 47. If the system being investigated were a truly linear system with a finite memory and the input and output data were free from error, the cross correlation coefficients for values of j greater than the memory of the system would be zero, and the number of equations would be the same in both methods. If, however, the system is not truly linear, or if there are errors in the data, the time series correlation method gives additional equations which can be included in the set of equations to be solved. In the latter case, the number of equations to be solved will be greater than the number of ordinates required in the pulse response and, hence, restraints can be introduced into the solution.

Computational Methods

In a truly linear system in which the input and output are given in the discrete form and can be determined without error, all of the methods of system

identification described above will give the same answer within the limits of computational error. For this case of error-free data, the choice between methods is merely one of the ease of computation, and there is no reason to go beyond the direct solution of the simultaneous equations involved by the method of forward substitution. For these ideal conditions, once the number of equations solved corresponds to the length of memory of the system, all the remaining equations will be automatically satisfied by the values for the ordinates of the output response already found. If, however, there are errors in the data, or if the system is not truly linear, then the values of the ordinates obtained for the optimum linear response may vary according to the method used. In this more general case, the choice between the methods depends not only on the convenience of computation but also on the manner in which the various methods handle errors in the data and linearize any nonlinear properties of the system under identification. Except for the basic case of solution by forward substitution, all of the methods require the use of a high-speed digital computer unless the problem is trivially small. The techniques used in the actual computations involved in the different methods are described in the literature cited at the end of this lecture.

Only the essential features need be mentioned here. In the least squares method, Body (*2*) suggested that the data be loaded into the computer as a single unit in the form:

$$[X/y]_{p,N+1} \tag{49}$$

In the least squares method, the input consists of $(m+1)$ ordinates of the input and $(p+1)$ ordinates of the output. A convenient way of organizing the calculations is as follows. The input data can be used to compute the elements of:

$$Z = X^T X \tag{49a}$$

which we have already seen to be the discrete autocorrelation coefficient of the input. It is also necessary to calculate the elements of:

$$W = X^T y \tag{49b}$$

which are the cross correlation coefficients of the input and output. A standard routine for matrix inversion can now be used to solve for the unknown finite period unit hydrograph as follows:

$$h = Z^{-1} W \tag{51}$$

Z will be a square matrix of size $(p-m+1)$ and W will be a column vector with $(n+1)$ rows. The unknown pulse response h will also be a column vector with $(n+1)$ rows.

Once again, it must be emphasized that the least squares method involves optimization subject to the restraint that the length of the response function

does not exceed the amount given by the difference between the length of the output and the length of the input. The prediction of the output using the finite period unit hydrograph, which is optimum in the least squares sense, will not be as good as the prediction of the output by a unit hydrograph, which is allowed to be of the same length as the output. However, the use of the method of least squares reduces the tendency towards *unrealistic* negative or wildly oscillating ordinates which may occur with the forward substitution method where there are errors in the data. If it were certain that the system were linear and that these *unrealistic* values were solely due to errors in the data, then there is a strong argument for introducing the restraints involved in the least squares estimate. However, if negative ordinates result from the attempt to represent a nonlinear system in a linear fashion, then the case for rejecting the negative ordinates is not nearly as strong.

For computation, further restraints are sometimes introduced into the calculation. Thus, Body (*2*) made the assumption that from a certain point onward the finite period unit hydrograph (pulse response) shows an exponential decline and made use of this assumption to reduce the amount of computation required. Similarly, Newton and Vinyard (*8*), in their description of the Tennessee Valley Authority method, referred to the introduction of the restriction that the ordinates of the pulse response may be replaced over a number of intervals by a straight line, thus simplifying the numerical computation at the cost of this restraint.

The sequence of computations is standard for any transform method based on orthogonal polynomials (*10*). The first step is to read in the input and output data and compute the coefficients of the input data (c_n) and of the output data (C_n) for the particular orthogonal expansion assumed. The corresponding coefficients for the pulse response or finite period unit hydrograph (γ_n) are then calculated from the linkage equation. These coefficients in the expansion of the pulse response can then be used to find the actual ordinates of the pulse response. In the harmonic analysis method applied to hydrologic data by O'Donnell (*9*), the actual period of runoff, when divided into standard intervals, provides a finite number of equidistant data points. The number of harmonic coefficients derived is the same as the number of data points. In Meixner analysis, however, the range is from zero to infinity so that account is taken not only of the finite number of data points in the isolated output record but also of the infinite number of points after the conclusion of output. For perfect matching, it would be necessary to take an infinite number of terms in the expansion of the pulse response. However, it is only necessary to carry the series far enough so that the ordinates within the period of output are determined sufficiently accurately, and errors in the zero ordinates after the close of output in which we are interested may be ignored.

In time series analysis, the autocorrelation and cross correlation coefficients of the input and output must first be determined. If we are dealing with an

isolated input to a linear system of limited memory, then the autocorrelation and cross correlation functions will become zero beyond a certain point. If, on the other hand, we are dealing with a continuous time series, it would be a matter of decision as to the point at which these functions should be truncated. After the autocorrelation and cross correlation coefficients have been determined, it is still necessary to solve the Wiener-Hopf equations given by equation 44. If all of the equations are used, then it will be possible to predict the output closely but *unrealistic* ordinates may be obtained. Eagleson (*3*) introduced the idea of solving the equations subject to the restraint that no negative ordinates occurred. This necessitates a computation of a linear programing solution to the Wiener-Hopf equations.

The whole subject of the comparison between the various methods for system identification in the presence of noise and of possible nonlinearity is one requiring careful investigation. Several research workers are known to be working on the problem at the moment, but none of the results have so far been published. It may be instructive to consider briefly the effect of an error on a simple case using synthetic data. The data used are those in problems 1 and 2 at the end of this lecture. If the values of the input and output from a system are given as:

$$x = 2, 6, 1 \tag{52a}$$

$$y = 0, 4, 14, 8, 1, 0 \tag{52b}$$

any of the methods described above can be used to show that the linear pulse response for the system is given by:

$$h = 0, 2, 1, 0 \tag{53}$$

If however, the output were mistakenly given as:

$$y = 0, 4, 17, 8, 1, 0 \tag{54}$$

then, the estimates of the optimum linear pulse response would vary with the method used. In this case, the method of direct forward substitution would give the linear response as:

$$h = 0, 2, 2.5, -4.5, 12.75, -36 \tag{55}$$

which is clearly unstable.

In using the method of least squares, it is necessary to decide the length of the pulse response to determine the size of the input convolution matrix. The output is given at six points and the input is given for three standard intervals. It could, therefore, be assumed that the pulse response, which is the response due to input in one standard interval, would not exceed four intervals in length. Assuming the pulse response (the finite period unit hydrograph) to be four intervals long, the least squares method gives as the optimum pulse

response:

$$h = -0.15, 2.31, 0.82, 0.02 \tag{56}$$

This result is seen to give an *unrealistic* negative ordinate at the beginning of the impulse response. If the restraint were inserted that this ordinate should be zero, the result obtained would be:

$$h = 0, 2.23, 0.76, 0.01 \tag{57}$$

The latter result is seen to be not too different from the true pulse response given by equation 53. However, even ordinates as small as the fourth ordinate of 0.01 have an effect on the solution. If the fourth ordinate were constrained to be zero, the result would be:

$$h = 0, 2.18, 0.82, 0 \tag{58}$$

It can be seen from the above series of results that the more information concerning the realistic form of the pulse response that is fed into the computation, the closer the result will be to the true pulse response, which has been masked by the error in the output. Similar variations in the result are obtained in the correlation method if a certain number of Wiener-Hopf equations are chosen or if additional restraints are placed on the problem.

Problems on Discrete Systems Identification

1. If the input in a system is given in Appendix table 2 by function 3 and the output by function 4, find the unit pulse response of the system both by the direct algebraic method and by the least squares solution.

2. For the data of problem 1, find the autocorrelation function of the input and the cross correlation function between the input and the output. Write down the set of discrete Wiener-Hopf equations for these particular data. Verify that the solution obtained in problem 1 is a solution to the latter equations.

3. Use the Z-transform to identify the pulse response of the system in problem 1 for the given input and output.

4. Solve problem 1 by either harmonic analysis or Meixner series.

5. In problems 1 to 4, what is the effect on the solution if the output function correctly given by function 4 in Appendix table 2 is mistakenly taken as function 5 in Appendix table 2?

6. In Appendix table 2, if the input to a linear time invariant system is given by the discrete function 18 and the output by the discrete function 19, find the pulse response of the system by using Meixner series.

7. Find the pulse response for the data of problem 6 by using harmonic analysis.

8. Appendix table 4 gives the effective rain and the storm runoff for a rainfall event on the Ashbrook catchment. Find the unit hydrograph for the catchment by a matrix method.

9. Find the unit hydrograph for the data in Appendix table 4 by using harmonic analysis.

10. Find the unit hydrograph for the data in Appendix table 4 by using Meixner series.

11. Find the harmonic coefficients or the Meixner coefficients of the functions for a number of the discrete functions given in Appendix table 2.

12. Find the Z-transform of the function for a number of functions given in Appendix table 2.

Literature Cited

(1) BAYAZIT, M.
1966. INSTANTANEOUS UNIT HYDROGRAPH DERIVATION BY SPECTRAL ANALYSIS AND ITS NUMERICAL APPLICATION. Central Treaty Organization Symposium on Hydrol. and Water Resource Devlpmt. Proc. Ankara.

(2) BODY, D. N.
1959. FLOOD ESTIMATION: UNIT GRAPH PROCEDURES UTILIZING A HIGH-SPEED DIGITAL COMPUTER. Water Res. Found. Austral. Bul. 4. 41 pp., illus. Sydney.

(3) EAGLESON, P. S., MEJIA-R, R., and MARCH, F.
1966. THE COMPUTATION OF OPTIMUM REALIZABLE UNIT HYDROGRAPHS. Water Resources Res. 2(4): 755–764.

(4) JURY, E. I.
1964. THEORY AND APPLICATION OF THE Z-TRANSFORM METHOD. 330 pp. New York.

(5) KULANDAISWAMY, V. C.
1964. A BASIC STUDY OF THE RAINFALL EXCESS-SURFACE RUNOFF RELATIONSHIP IN A BASIN SYSTEM. Ph.D. thesis, Ill. Univ. (University Microfilms Publication No. 64-12535.)

(6) LEE, P.
1966. PROPERTIES OF MEIXNER POLYNOMIALS. Dept. Elect. Engin. Monash University, Melbourne.

(7) LEE, Y. W.
1960. STATISTICAL THEORY OF COMMUNICATIONS. 509 pp., illus. New York.

(8) NEWTON, D. W., and VINYARD, J. W.
1967. COMPUTER-DETERMINED UNIT HYDROGRAPH FROM FLOODS. Amer. Soc. Civ. Engin., Jour. Hydraulics Div. 93(HY5): 219–235.

(9) O'DONNELL, T.
1960. INSTANTANEOUS UNIT HYDROGRAPH DERIVATION BY HARMONIC ANALYSIS. Internatl. Assoc. Sci. Hydrol. Pub. 51, pp. 546–557. Gentbrugge.

(10) ———
1966. METHODS OF COMPUTATION IN HYDROGRAPH ANALYSIS AND SYNTHESIS. PART III, RECENT TRENDS IN HYDROGRAPH SYNTHESIS. TNO Proc. and Inform. Note 13, 39 pp. The Hague.

(11) RESTREPO, J. C. O., and EAGLESON, P. S.
1965. OPTIMUM DISCRETE LINEAR HYDROLOGIC SYSTEMS WITH MULTIPLE INPUTS. Mass. Inst. Technol., Hydrodyn. Lab. Rpt. 80. Cambridge.

(12) ROCHE, M.
1965. POINT DE VUE MATRICIEL SUR UN OPERATEUR LINEAIRE DE TRANSFORMATION PLUIES-DEBITS [PRIMARY POINT OF VIEW ON A LINEAR OPERATOR FOR TRANSFORMATION OF RAINFALL INTENSITY]. Proc. Symposium on Representative and Experimental Areas (Budapest). Internatl. Asoc. Sci. Hydrol. Pub. 66(1): 234–246.

(13) SINGH, K. B.
1962. A NON-LINEAR APPROACH TO THE INSTANTANEOUS UNIT HYDROGRAPH THEORY. Ph.D. Thesis, Ill. Univ. Urbana. [Xerox copy available by purchase from University Microfilm, Inc., P.O. Box 1346, Ann Arbor, Mich., 48106, Pub. 62-6231.]

(14) SNYDER, W. M.
1955. HYDROGRAPH ANALYSIS BY THE METHOD OF LEAST SQUARES. Amer. Soc. Civ., Engin. Jour. Hydraulics Div. 81: 1–25.

LECTURE 7: SIMULATION OF HYDROLOGIC SYSTEMS

Basic Ideas in Simulation

Having spent three lectures on the problem of analysis, we now turn to the question of synthesis or simulation. It will be recalled from lecture 1 (see pages 5–7, 24, and 27) that simulation consists essentially of synthesizing a system (abstract or real) which will operate on the given inputs so as to produce an output which will approximate the output of the prototype system within a given degree of accuracy. Chorafas (*18*) has defined simulation as: "Simulation is simply a working analogy. Analogy means similarity of properties as relations without identity."

A model or a simulation reproduces some but not all the characteristics of the prototype. Ideally, we might expect the simulating system to reproduce the behavior of the prototype system exactly, but to do this the simulating system would have to be as complex as the prototype. It is necessary to fix the accuracy required and to choose the features of the prototype system operation which we hope to imitate. Any attempt at simulation is intimately tied up with standards of accuracy and with a definition of objectives. Unless we are explicit on these matters, our simulation will not be scientifically respectable.

In many parts of hydrology, as in many parts of mechanics, we simulate the action of the system in which we are interested by a set of mathematical equations. Thus, we can simulate the physical problem of open channel flow by the equation of continuity and the dynamic equation. Already, two successive simulations are involved. The finite difference algorithm may then be simulated on a digital computer so that there is a further degree of removal from the original physical problem. At each level of simulation there is a danger that the simulating system will not correspond in some important respect to the system it is attempting to simulate. At each level, we must ensure that our imitation is sufficiently accurate for our purpose.

In open channel flow, we must be satisfied with the validity of the equations of continuity and momentum; we must be satisfied that our finite difference scheme is stable, convergent and accurate; we must be satisfied that our computer program does not involve an undue buildup of round-off error; and so on.

In devising a simulating system, it is necessary to compromise between simplicity in the model and accuracy of prediction of the prototype behavior. A simple system may simulate a prototype system to a high degree of accuracy without resembling that system. In network theory, it is quite easy to show that certain systems are equivalent to one another though quite different in structure. It must be remembered that synthetic systems used in simulation are at best only operationally equivalent to the prototype system.

Simulation has long been used in hydrology to transfer results from one watershed to another. This can readily be done if we can find a relationship between the operational behavior of a watershed for which measurements are available and the characteristics of that watershed. Thus all the methods for obtaining a synthetic unit hydrograph used in applied hydrology are methods of simulating the behavior of an ungaged watershed. Sophisticated methods of simulation have been introduced into hydrology in recent years. Simulation is used in stochastic hydrology, where long records of flow are synthesized from a relatively short historical record and used to study the behavior of a reservoir or a reservoir system. Complex water resource systems have been simulated and the decisionmaking process included in the simulation (*28*, *38*, *43*).

In these lectures, however, we are only concerned with the use of simulation in parametric hydrology. Lecture 8 deals with the question of synthetic unit hydrographs and lectures 9 and 10 with the mathematical simulation of hydrologic systems by means of mathematical functions and conceptual models. Accordingly, these two topics will not be dealt with in the remainder of this lecture. Instead, attention will be concentrated on the basic principles of simulation and on the remaining types of simulation which can be useful in hydrology. These may be grouped under the headings of *regression models*, *digital simulation*, *analog simulation*, and *physical models*. Since the discussion ranges over so wide a field, the concern will be with general principles and basic ideas rather than the details of any particular method of simulation. The emphasis will be on the essential similarities between the basic steps involved in the different methods.

No matter what the field of application, the type of problem involved, or the type of simulation, the approach is essentially similar. It is necessary first of all to decide what type of model is to be used to simulate the action of the prototype. Having decided on this, it is necessary to choose the components of the model and their interconnection. Once a trial model has been determined in this way, the ability of the model to simulate the prototype must be verified on the basis of a record of inputs and outputs measured on the prototype system. For a physical model, this is done by verifying that the model can predict the output of the prototype system to an acceptable degree of accuracy for a past event for which records are available. If it is unable to do so, the model must be modified until adequate simulation is obtained. For a mathematical model, the verification may consist of applying the model to a case for which there is a known solution, as a prelude to applying it to a case in which no solution is known. For a mathematical model, it may be necessary during the verification phase to modify the structure of the model or to change the values of some of the parameters of the model to achieve a satisfactory precision of prediction. In modern hydrology extensive use is made of parametric synthesis in which a form of mathematical or conceptual model is

assumed and the optimal value of the parameter is determined. Parameter values in a model are said to be optimal when these particular values result in a prediction of the output which is a closer fit (in some defined sense) to the output from the prototype than can be obtained with any other parameter values for the same model.

There is a wide choice among types of models suitable for simulating deterministic hydrologic systems. We may decide to use a physical model or an analog model; we may decide to use a conceptual model consisting of an arrangement of linear channels, linear or nonlinear reservoirs, thresholds or feedbacks, and so forth; or we may decide to use a mathematical model to represent the hydrologic system by a set of mathematical equations. Even after deciding the general type of model to be used, there are still a number of matters to be determined. For example, if we have decided to use an analog technique, we must decide whether we are going to use (a) a direct analog model in which various sections of the prototype will be modeled directly and be more or less recognizable in the analog, or (b) a general-purpose analog computer in which the mathematical behavior of the protype is simulated by analog components representing specific mathematical operations. If, on the other hand, we have decided to use a mathematical simulation, there is a choice between regression models, representation of the system by a set of differential equations, or representation of the system operation by a mathematical curve belonging to some particular family. In the case of a conceptual model, it is necessary to decide whether the model is to be linear or nonlinear, whether thresholds are to be included, what particular types of component are to be used, and how they are to be connected together.

In some types of hydrologic simulation, it is usual to determine parameter values on the basis of field measurements or of personal judgment. However, the operation of this initial version of the model should be thoroughly verified and the model parameters adjusted until satisfactory operation is obtained. Only then can the model be safely used as the basis of prediction. For most mathematical and conceptual models, the values of the parameters are not predetermined but are optimized on the basis of known input and output. There is some excuse for a lack of objectivity in the optimization process when faced with ad hoc problems in applied hydrology. Even in this case, however, optimization on an objective basis has the advantage that the results from this individual study can be comined with others in a meaningful fashion. In hydrologic research, there is no excuse for avoidable subjectivity. Nevertheless, the hydrologic literature is full of models justified by a single illustration which shows that the predicted output closely resembles the actual output. Such "optimization by eye" is incapable of being integrated into a general body of scientific knowledge and is unworthy of the name of scientific hydrology.

We can borrow from statistics and numerical analysis a number of criteria of optimization. These include the methods of moments, least squares, mini-

max error, and maximum likelihood. One such technique may be preferable in one situation, and another in another situation. What is important is that the method be objective, repeatable, and that it be clearly described in any reporting of the work.

Regression Models

Regression techniques (*27*, *57*, *65*, *69*) are essentially a method of simulation. Their main value is in prediction rather than in the investigation of causal linkages. Once the decision has been made to use a rgeression method, it is necessary to decide what type of regression model will be used.

An example (*11*) of multiple linear regression, a method which has been widely used in hydrology, is shown on figure 7–1. In this example, the following basic relationship is assumed:

$$Q_T = a(A)^b(S)^c(St)^d(I)^e(t)^f(O)^g \tag{1a}$$

In this formulation, the peak annual flood (Q_T), which is taken as the dependent variable, is assumed to be related to unknown powers of the various watershed parameters (A, S, S_t, I, t, and O), which are taken as independent variables. Q_T is the annual peak discharge in cubic feet per second for a recurrence interval of T years; A is the drainage area in square miles; S is the main channel slope in feet per mile; S_t is a measure of the surface storage area; I is the 24-hour rainfall in inches for a recurrence period of T years; t is a measure of freezing conditions in midwinter; and O is an orographical factor. If the relationship given by equation 1a is expressed in logarithmic form as follows:

$$\log Q_T = \log a + b(\log A) + c(\log S) + d(\log S_t) + e(\log I) + f(\log t) + g(\log O) \tag{1b}$$

then the relationship is linear both in the new logarithmic variables and in the unknown parameters. Consequently, the unknown parameters (a, b, c, d, e, f, and g) can be determined by the standard techniques of multiple linear regression.

The assumption of the particular relationship given by equation 1a or equation 1b makes this approach just as much a model as if the variables were fed into an analog computer. Indeed, to the hydrologist devoted to the analog approach, the method of multiple linear regression models would appear somewhat as shown in figure 7–1. In this diagram, each of the dependent variables is fed into a function generator which raises it to the designated power. The resulting outputs are then multiplied together to give the dependent variable. For the parameters to be optimized either in the regression equation or in the analog, the value of the exponents of the independent vari-

ables that give the best fit between the predicted peak flows and the observed peak flows must be determined. The logarithmic transformation of the variables would be paralleled in the analog case by replacing the analog shown in figure 7–1 by one in which the function generators would transform the independent variables logarithmically and the multiplier would be replaced by an adder.

$$Q_T = a(A)^b(S)^c(S_t)^d(I)^e(t)^f(O)^g \qquad [1a]$$

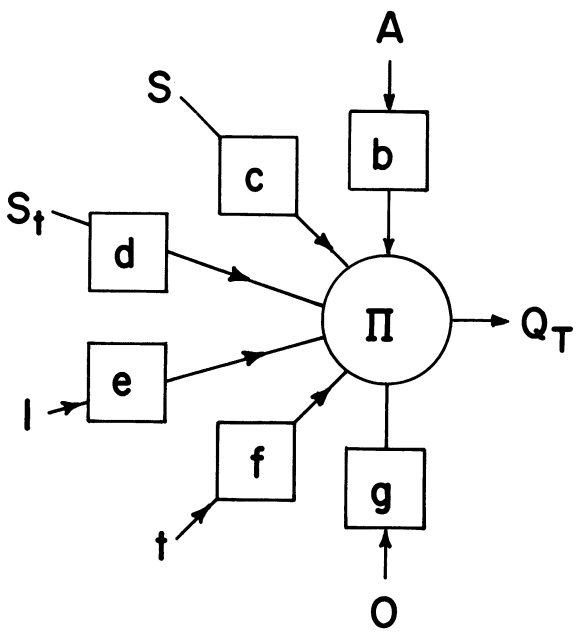

$$\log Q_T = \log a + b(\log A) + c(\log S) + d(\log S_t) + e(\log I) + f(\log t) + g(\log O) \qquad [1b]$$

FIGURE 7–1.—Regression analysis.

The standard regression technique takes as a criterion the minimization of the sums of the squares of deviations of the predicted values of Q_T from the measured values of Q_T. The model can be evaluated by examining the value of the square of the multiple correlation coefficient (R^2). For a perfect model, R^2 would be equal to 1 and the closer R^2 approaches 1, the better the simulation of the prototype system. As in all cases of simulation, we must try to reconcile the advantages of increased accuracy and the convenience of keeping the model as simple as possible. If one of the listed watershed parameters is dropped from equation 1—which is equivalent to fixing the appropriate exponent as zero—we can view this as either simplification of the model or a constraint on the parameter. If one or more parameters are held at zero, the optimum values of the remaining parameters can be determined and the corresponding value of R^2 calculated. If, subsequently, one of the previously constrained parameters is allowed to enter into the optimization procedure, a new set of parameter values will be obtained for all the variables, and the value of R^2 will be increased provided the variable which now enters the relationship has an influence on the dependent variable not accounted for by the other variables in the relationship.

In the example of multiple linear regression quoted above, which is taken from Benson's (*11*) study of 164 station records in New England, the correlation of the 10-year peak flow Q_{10} with the area A alone gave a value of $R^2 = 0.78$. This figure may be crudely interpreted as indicating an efficiency of simulation of 78 percent. If, instead of using a single input, the channel slope (S) is also taken into account, the value of R^2 increases to 0.889 which is a distinct improvement. The inclusion of the orographic factor (O) with the area and slope increases R^2 to 0.932; the further addition of the storage parameter (S_t) results in a small increase giving 0.945; inclusion of the temperature factor (t) brings the value up to 0.959. Inclusion of the precipitation factor (I) does not give any further improvement. The exact values of the exponents were simplified, thus giving a more convenient formula without appreciable loss of accuracy. The final regression equation with simplified exponents was:

$$Q_T = 4.52 \frac{A S^{0.4} t^{0.4} O^{1.1}}{S_t^{0.3}} \tag{2}$$

This is an interesting and somewhat surprising illustration of what may happen when using a regression model; though rainfall is an important physical cause of the runoff, the inclusion of the rainfall factor does not improve the accuracy of prediction based on the other factors and rainfall is not included in the final equation. The fact that the rainfall parameter does not improve the accuracy of prediction would suggest that it is highly correlated with the watershed parameters already included in the model and hence, has no additional independent information to contribute.

If a linear regression does not give a good working model, the use of curvilinear regression may improve the situation. The commonest model used in curvilinear regression is polynomial regression, which for the case of simple regression (only one independent variable) takes the form:

$$y=a+bx+cx^2+dx^3+\ldots\ldots \tag{3a}$$

This is clearly equivalent to the multiple linear regression equation

$$y=a+bx_1+cx_2+dx_3+\ldots\ldots \tag{3b}$$

if each of the powers of x is considered as a separate variable. Though equation 3a expresses a nonlinear relationship between y and x, the equation is linear in the unknown parameters (a, b, c, d, and so forth) and the standard methods for estimating these parameters can be used. The above approach can be extended to cover multiple polynomial regression, which is represented by the equation:

$$y=p_1(x_1)+p_2(x_2)+p_3(x_3)\ldots\ldots \tag{3c}$$

where $p(x)$ denotes a polynomial of x.

If the factors are thought to combine as products rather than as sums, then an equation of the following form is appropriate:

$$y=f_1(x_1)\cdot f_2(x_2)\cdot f_3(x_3)\ldots\ldots f_n(x_n) \tag{4}$$

Equation 1a on page 000 is a special case of equation 4, which is adopted because it can be readily transformed to the multiple linear regression form shown in equation 1b. If this particular model does not result in satisfactory simulation, then another model must be tried. A model which is another special case of equation 4 is described below for the case where there are three independent variables.

As a first approximation, it may be assumed that the individual variation of y with x_1 can be represented by the linear relationship:

$$f_1(x_1)=a_1+b_1x_1+\ldots\ldots \tag{5a}$$

and a similar linear relationship is assumed for the other two independent variables:

$$f_2(x_2)=a_2+b_2x_2+\ldots\ldots \tag{5b}$$

$$f_3(x_3)=a_3+b_3x_3+\ldots\ldots \tag{5c}$$

The general relationship for these assumptions can be written:

$$\begin{aligned} y=&a_1a_2a_3\\ &+b_1a_2a_3x_1+a_1b_2a_3x_2+a_1a_2b_3x_3\\ &+b_1b_2a_3x_1x_2+a_1b_2b_3x_2x_3+b_1a_2b_3x_3x_1\\ &+b_1b_2b_3x_1x_2x_3 \end{aligned} \tag{5d}$$

The relationship between the dependent variable, y, the three original independent variables (x_1, x_2, x_3) and the four products formed from them can now be analyzed (*57*).

If the factors do not act independently of one another, then a model of joint regression:

$$y=f(x_1, x_2, x_3 \ldots\ldots x_n) \tag{6a}$$

must be used. The very general form of equation 6a may be modified by assuming that the variables act in groups so that we can write some such equation as:

$$y=f_1(x_1, x_2)+f_2(x_3, x_4)+\ldots\ldots \tag{6b}$$

Unless there is some apriori reason to suggest a particular relationship, joint regression analysis is more conveniently handled by graphic than by algebraic methods. For joint regression, it is frequently helpful to assume the model of multiple linear regression, then plot the residual values of y against the independent variables and fit "contours" if there is any indication of a joint relation. In this case, the joint regression term is added to the linear terms.

Multiple regression analysis makes the assumption that all the errors are concentrated in the dependent variable and also that the so-called independent variables are not correlated with one another. Violation of the latter assumption does not prevent the derivation of a regression relationship which can be used as a prediction tool, but it renders meaningless the tests of significance used in a regression analysis. In hydrology, due to the operation of geomorphological factors, the watershed parameters used as independent variables are often very highly correlated among themselves. Multivariate analysis (*33*) seeks to avoid these two problems by treating all the variables alike and by performing component analysis to determine any truly independent grouping of variables which may be present. Wong (*66*) applied component analysis to the data for New England floods referred to on pages 000 to 000. Wong described how to isolate orthogonal components and showed that for the average annual flood it was possible to produce a relationship based on two parameters which was as accurate as the multiple linear regression equation based on five parameters. Some other papers dealing with the application of multivariate analysis to hydrology are included among the references at the end of this lecture (*44, 58, 59*).

The method of coaxial correlation described by Linsley, Kohler, and Paulhus (*42*) has been widely used in applied hydrology. Coaxial correlation is essentially a graphic method of nonlinear regression and is suitable for the solution of ad hoc problems. In some cases, the shape of curves used reflected certain assumptions about the soil moisture accounting involved. In its original form, coaxial correlation was subject to the disadvantage that the process was a subjective one and different workers would produce different diagrams from the same set of data. Those experienced in the use of the method tended

to follow a fixed procedure and to produce coaxial correlation diagrams which were similar in their general form.

If coaxial correlation is to be used as a tool in parametric hydrology, it should explicitly involve the assumption of a given model of watershed behavior. This approach to coaxial correlation is reflected in the work of Becker (*7, 8, 10*). Figure 7–2 is based on his papers and can be used to illustrate the approach to coaxial correlation based on physical reasoning and the use of a particular model. The diagram is intended to be used to estimate the basin recharge following rainfall. As indicated by arrows in figure 7–2, progression is from *A* to *B* to *C* quadrants. Quadrant *A* is intended to give the relationship between potential basin recharge and initial moisture content, the latter being represented by an antecedent precipitation index. The separate lines in quadrant *A* represent week numbers and, therefore, different seasons of the year. Quadrant *B* allows for the effect of rainfall duration (and hence of the rate of infiltration and replenishment of soil moisture) on the basin recharge.

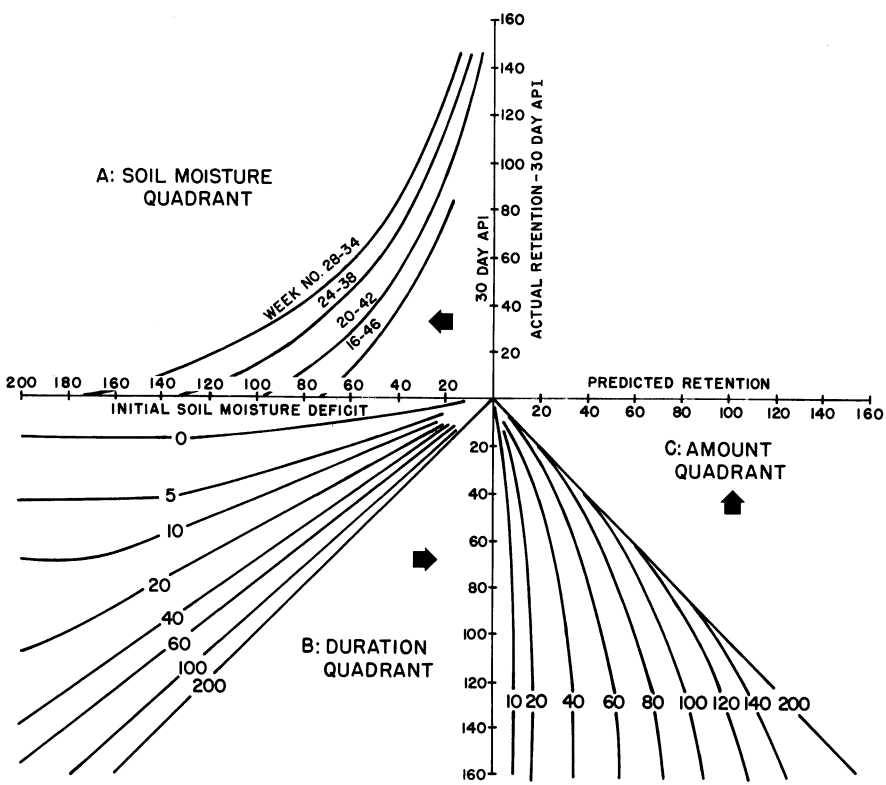

FIGURE 7–2.—Coaxial correlation.

Quadrant C reflects the effect of the amount of rainfall on the actual basin recharge.

Becker argues that because of the physical processes involved, there are certain constraints on the shapes of the curves in the different quadrants. He invokes a simplified model of the watershed behavior to determine the general nature of these restraints. The higher the value of the antecedent precipitation, the less storage will be available in the watershed for recharge. If the antecedent precipitation index approaches an infinite value, then all the rainfall must run off, and there can be no recharge to the basin no matter what the value of the volume of rainfall or duration of rainfall. Becker argues from this that all the lines in quadrants B and C must pass through the origin, whereas in the most of the published literature (see for example *51*), the lines in quadrant B are drawn as parallel lines, and those in quadrant C are drawn as meeting at a point on the axis between quadrants A and D.

The next step in Becker's procedure is to take account of the fact that most present-day models of total catchment response assume the existence of a threshold between soil moisture and direct runoff (*39*, *54*). A simple threshold operates as follows. If the storm rainfall is less than the initial field moisture deficit, there will be no direct runoff, and all of the rainfall will be accounted for as basin recharge. If, however, the storm rainfall is greater than the initial field moisture deficit, then the soil moisture storage will reach its threshold value and direct storm runoff will occur. For a simple threshold, the amount of direct runoff will be equal to the volume of rainfall minus the volume of the initial field moisture deficit.

If the duration of the rainfall is sufficiently long, the intensity of rainfall will be less than any predetermined limiting infiltration rate. Becker argues that for a finite amount of rain and a very long duration, the line in quadrant C must consist of a limiting line which makes the ordinate between quadrants B and C equal to the ordinate between quadrants C and D, together with a vertical line, corresponding to the amount of rainfall. When the deficit given on the ordinate between quadrants B and C is greater than the amount of rainfall, there is no direct runoff; then the recharge is equal to the amount of rainfall and is independent of the value of the initial deficit. In this case, the value of recharge to be read on the ordinate between quadrant C and quadrant D is governed by the vertical line corresponding to the rainfall amount. The inclined equal value line—which acts as an upper limit to the series of vertical lines—governs the determination of the basin recharge for the case where the rainfall is greater than the initial field moisture deficit; in this case, the basin recharge given on the ordinate between quadrants B and D.

Becker recognizes that a quadrant C pattern of this type (a series of vertical lines for different rainfall amounts and one line at 45°) is essentially a simplified model based on a lumping of the characteristics of the catchment, which assumes that the rainfall distribution and the distribution of field moisture deficit are uniform throughout the catchment. If allowance is made for the

variation of field moisture deficit (or of rainfall) throughout the watershed, then the curve in quadrant C for any given rainfall amount will show a smooth transition rather than a sharp break from the sloping 45° line to the appropriate vertical line. If the rainfall is very high relative to the initial field moisture deficit then the threshold will probably be exceeded in nearly all parts of the catchment, and the basin recharge will closely approximate the initial deficit. If, on the other hand, the rainfall were very small relative to the initial deficit, then the threshold capacity would probably not be reached in any part of the catchment, and thus the basin recharge would be equal to the amount of rainfall. For intermediate ratio of rainfall to moisture deficit, a smooth transitional curve would be obtained as shown in quadrant C, figure 7–2. The curves shown on the figure reflect the assumption of varying thresholds through the watershed, that is, of a multicapacity accounting system (*39*, *50*, *53*).

For very long durations, the low intensity of rainfall will ensure that all of the rainfall will infiltrate into the soil. For such cases, the duration will not affect the recharge to the basin, and hence the line in quadrant B will be an inclined straight line giving equal values on the ordinate between quadrant A and quadrant B and the ordinate between quadrants B and C. For the same amount of rain and a shorter duration, the rate of rainfall may exceed the infiltration capacity of the soil at some time during the storm, and the full amount of potential basin recharge may not be realized; consequently, water failing to infiltrate the soil will contribute to direct storm runoff. During a storm event, infiltration is limited to the duration of rainfall (T_R) plus the time for which overland flow persists after the rainfall ends (T_o). Becker assumes a limiting rate of infiltration into the moist soil (f_m), and hence for a given duration of rainfall the recharge cannot exceed the product of this infiltration rate plus the total duration of overland flow (that is, the sum of the rainfall duration plus the time of overland flow after the cessation of rain), which is assumed to be constant. This limitation on infiltration is reflected in the horizontal lines in quadrant B for low durations of rainfall; these lines represent the limiting recharge $f_m(T_R+T_o)$.

Where the rainfall intensity is less than the limiting infiltration rate for a wet surface, the actual basin recharge depends on the rate at which moisture in the soil profile is replenished. If the water infiltrating through the surface is in excess of that required for soil moisture recharge, then interflow will occur and contribute to direct storm runoff. Becker assumes that the rate of soil moisture recharge is proportional to the soil moisture deficit, varying from zero when the deficit is zero (that is, the soil is at field capacity) to the rate of maximum infiltration into a dry soil when the deficit is equal to the field moisture capacity. This assumption gives an exponential decline with time in the rate of soil moisture recharge. Becker shows that for a constant rate of infiltration into a dry soil (f_{max}) and a constant value of field moisture ca-

pacity (NW) that the volume of recharge for a given duration (T_R) is proportional to the volume of soil moisture recharge for the same amount of rainfall and an infinite duration. Consequently, for all cases where the recharge is not limited by the rate of infiltration through a wet surface, the lines in quadrant B (which reflect the effect of duration on recharge) will form a ray of lines through the center of the coaxial system as shown in figure 7–2.

The general shape of the curves in quadrant A can be shown to be plausible by means of arguments based on relatively simple assumptions. If the catchment were homogeneous, one would expect the lines in quadrant A to be straight lines joining the value of the soil moisture deficit under wilting conditions on the two axes. If, however, the catchment is considered as being made up of a number of areas with differing maximum field moisture deficits, then the curve connecting the initial soil moisture (represented by the antecedent precipitation index) on the axis between quadrants A and D with the maximum possible recharge on the axis between quadrants A and B would take a general hyperbolic form. The existence of different curves for different seasons of the year would be expected due to the effect on moisture accounting of evaporation, transpiration, and consumptive use. Becker showed that by drawing the coaxial correlation diagram as described above, results could be obtained as good as (if not better than) with the more conventional form usually recommended. His approach has the advantage that the pattern of lines in his diagram and the position of some of the lines can be related to a definite model and to physically reasonable catchment parameters. It would be interesting to link up Becker's approach with some of the models which have been suggested for simulating the entire watershed response discussed later in this lecture. Becker (*9*) also includes a quadrant reflecting the effect of ground water level on the relation among antecendent conditions, rainfall, and basin recharge. This quadrant is not shown in figure 7–2.

In all types of regression analysis—linear or nonlinear, numerical or graphical, multiple regression, or multivariate—it must be remembered that the choice of a particular model and that the computational procedure merely represent a way of optimizing the parameters of this model. By optimizing the parameters on the basis of an actual record, we enable the particular model chosen to simulate the operation of the prototype as nearly as possible in accordance with some chosen criterion. There is no guarantee, however, that we have chosen well in choosing the particular method or model used. Far too little has been done in the systematic exploration of the problem of choosing between models.

Regression models of all types share with models in general the feature that they may predict the behavior of the prototype without resembling or revealing the nature of the prototype system. However, it is correct to say that the more closely a model is based on the physical nature of the prototype system the more likely is it to prove its worth as a general-purpose model (that is, to

predict the behavior of the prototype under a wide variety of conditions) and facilitate the meaningful comparison of parameter values derived from using the same general model to simulate different prototypes.

Digital Simulation

Except in the simplest cases, the regression models previously described and the mathematical methods of simulation described in lecture 9 require the use of digital computers. In such cases, the use of the computer is not compulsory in the simulation of the hydrologic system, but rather it is the most convenient method of computation. In the present section, we are not concerned with the use of the computer for these purposes of calculation only but rather with simulations of hydrologic systems involving techniques which are only feasible on a digital computer, for example, systematic searching for optimum values of relatively large numbers of parameters.

In the present section, a description will be given of some typical simulations on the digital computer of the hydrologic processes involved in elements of the hydrologic cycle and the simulation of the total response of the catchment. The highly important subject of the optimization techniques required to obtain objective estimates of the best values of the parameters to be used is left until the next section.

Digital simulation can be used to reproduce the behavior of any element in the hydrologic cycle. In lecture 2, we discussed the empirical formulas used in applied hydrology for estimating snowmelt. The simplest of these formulas was:

$$M = 0.06(T_{\text{mean}} - 24) \tag{6a}$$

which relates the daily snowmelt in open areas in inches M to the mean daily temperature (T_m) in degrees Fahrenehit. A complex formula which has been widely quoted is:

$$D = \frac{\rho k_0^2}{80 \log_e(a/z_0) \log_e(b/z_0)} u \left[e_p T + (e - 611) \frac{423}{p} \right] \tag{6b}$$

which relates the snowmelt D to a number of micrometeorological factors.[1]

In contrast to the above formulas, figure 7–3 shows a digital simulation model for snowmelt developed by Amorocho and Espildora (*1*). It can be seen that this simulation for the snowmelt process is much more complex even than equation 6b. In the simulation process, the inputs to the system are the meteorological conditions and the initial condition of the snow. The simulation model is shown in the form of the flow chart which can be readily programed for a digital computer. Indeed it would be difficult to apply the model shown in figure 7–3 without the use of a digital computer due to the

[1] Lecture 2, pp. 44 and 45.

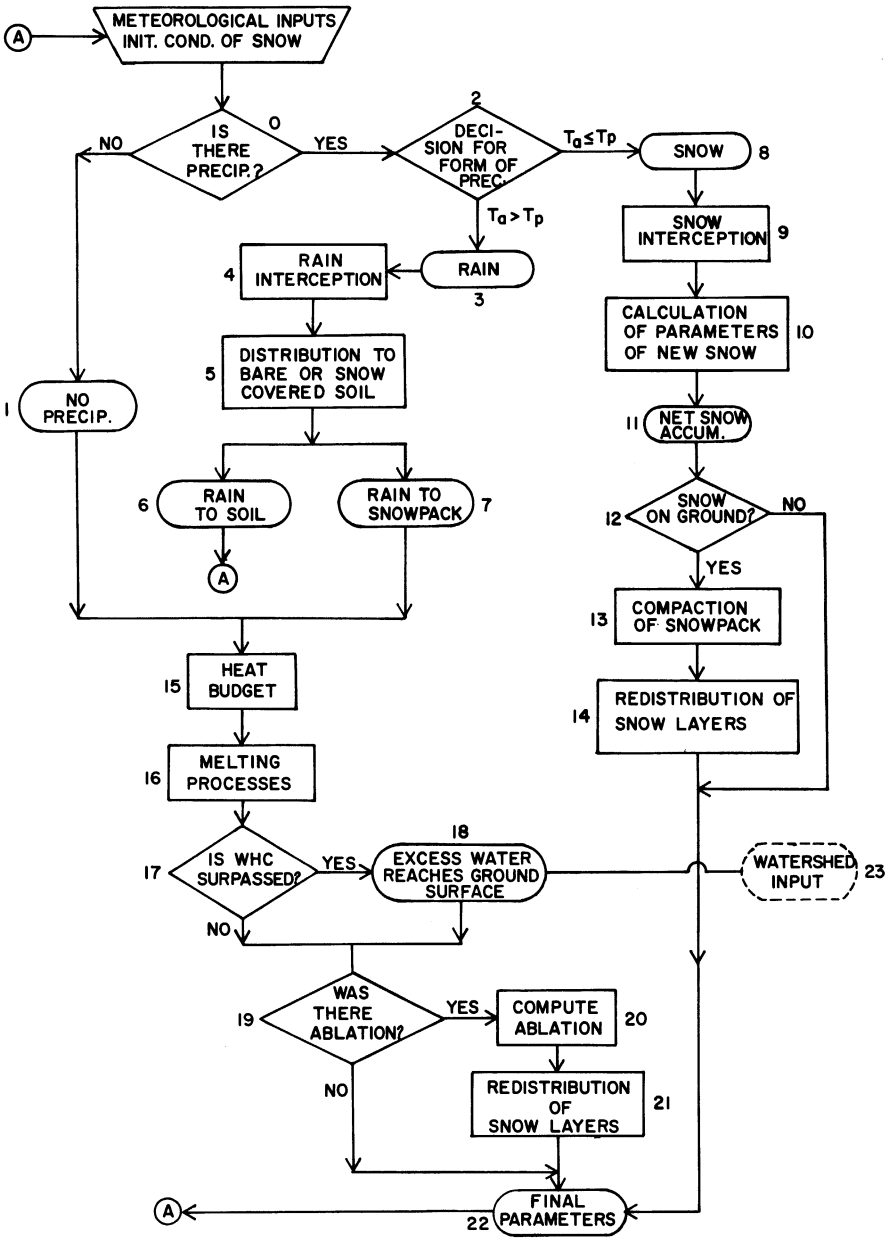

FIGURE 7–3.—Simulation of snowmelt.

large number of logical decisions as well as computations which are required. These logical decisions are represented by lozenge-shaped boxes on figure 7–3. The first question is asked in decision box 0: Is there precipitation? If there is not precipitation, we travel by a route through box 1 and then consider the heat budget in box 15 which takes into account such vectors as incoming radiation. If there has been precipitation in the form of rain, the amount of interception is allowed for, and a distribution of the precipitation is made between bare soil and snow-covered soil in box 5. The rain going directly to the soil is an output of the model and an input to the watershed. The rain falling on the snowpack is taken into account in a heat budget.

In this simulation, the snow cover is divided into layers which are treated separately. The effect of heat, rainfall, or new snow on the existing snow layers are all taken into account. Each box in the flow chart represents a physical process; some of these processes are of a high complexity, and this is reflected in the computational equations used in the step. Thus, box 16 in figure 7–3 has to be expanded into a flow chart as complex as figure 7–3 itself. Equations 6a and 6b and the flow chart shown in the figure are simulations of certain physical processes. We can recognize the empirical equations of classical physical hydrology as very simple models of these physical processes. Due to the advent of the digital computer, we can now replace these simple physical equations by simulation models involving both complex mathematical relationships and multiple decision processes. The simulation shown in outline on figure 7–3 and described briefly above is only one possible model of the snowmelt process, and other digital models have been developed and reported in the literature. One such simulation model by Anderson and Crawford forms part of the later versions of the Stanford watershed model (*3*, *23*).

The other individual processes in the hydrologic cycle may also be simulated in this way. The contrast between the classical empirical equations and more complex simulations based on the digital computer can also be illustrated for transpiration. Thus we could estimate transpiration according to a combination-type formula such as that of Penman (*49*):

$$E_T = \frac{E_a + \Delta/\gamma \cdot H_T}{1 + \Delta/\gamma} \tag{7}$$

where the potential transpiration E_T is estimated as a weighted average of the aerodynamic factor E_a and of the heat budget factor H_T, the weighting factor Δ/γ being a function of temperature. This equation may be contrasted with the simulation of transpiration shown in figure 7–4, taken from a recent paper in "Water Resources Research" (*67*). This represents the simulation of the action of a plant in removing moisture from the soil and transpiring it to the atmosphere. While it is not likely that such a detailed simulation would

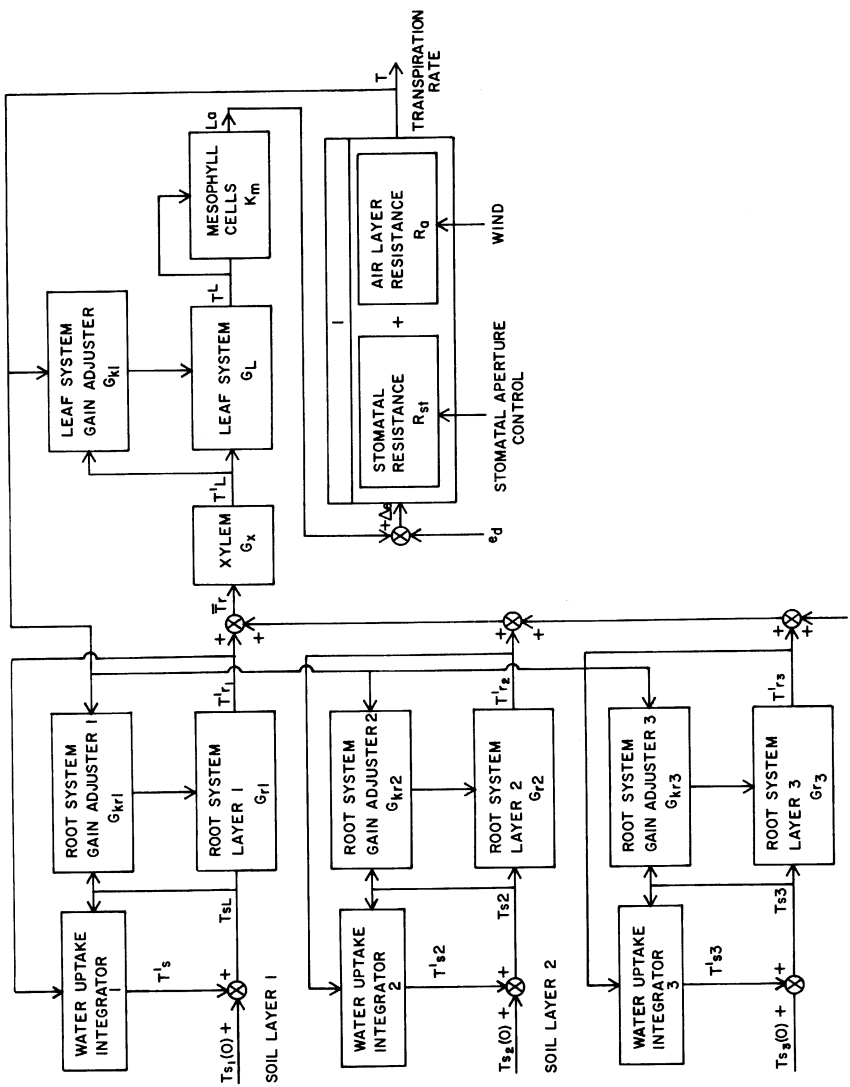

FIGURE 7–4.—Simulation of transpiration.

be required in hydrology, it does indicate the complexity underlying the processes with which the hydrologist is concerned.

The full simulation of the process is more complex even than shown on figure 7–4. On the lower right-hand side of figure 7–4, stomatal aperture control appears as an input factor. Figure 7–5 shows that this factor, which is an input to the transpiration simulation, itself depends in a complex fashion on a number of inputs. When we look at simulations such as these, we realize that the complexity of a formula such as Penman's is negligible compared with the complexity of the physical processes which it is intended to represent. It is interesting, in the case of the two simulations for transpiration and stomatal control, that the authors first show the diagram from a botanical viewpoint, then from a more abstract system viewpoint, and finally in terms of system functions of the different operations involved.

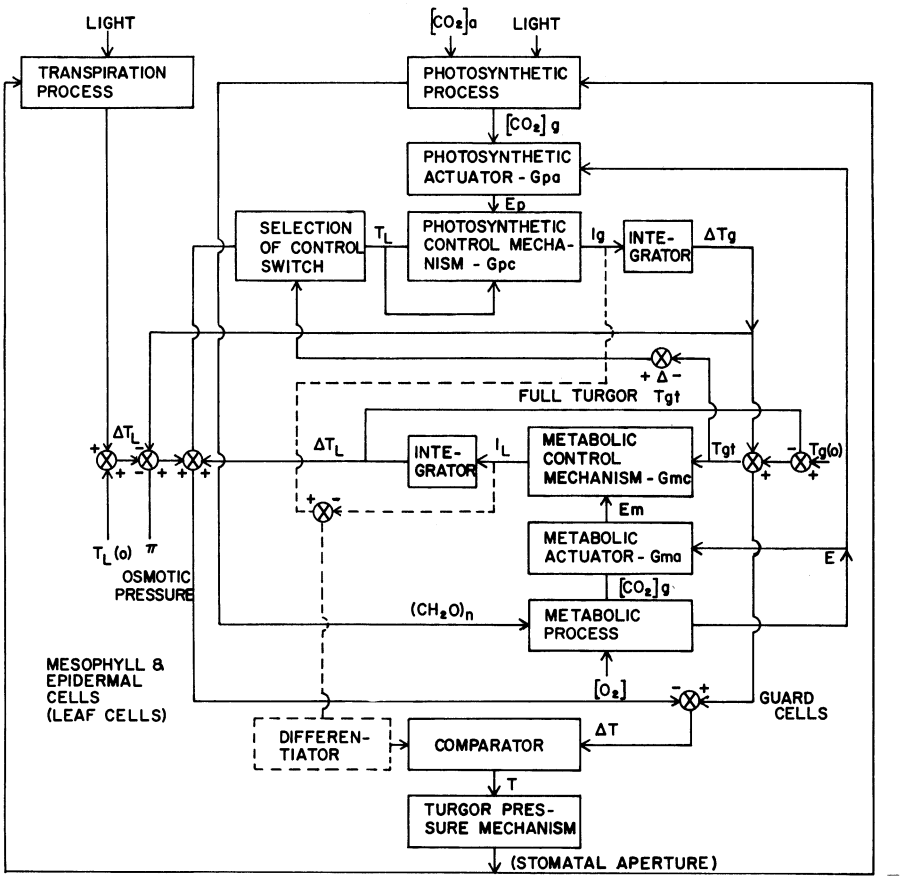

FIGURE 7–5.—Simulation of stomatal control.

Other elements of the hydrologic cycle can be similarly treated. The processes involved in flow—whether overland, in open channels, through soils, or from ground water reservoirs—can be simulated by models of varying complexity. These phenomena lend themselves to relatively simple simulation by overall mathematical equations or by conceptual models. These methods will be discussed in lecture 9. If, however, we were not satisfied with the use of bulk friction formulas and insisted on taking into account the fine details of turbulence structure and viscous dissipation of energy, the simulation of these processes would become extremely complex. For flood routing in natural channels, one may choose among the simple methods of flood routing used in applied hydrology, the relatively simple conceptual methods which have been developed recently, and the solution of the problem in its full complexity on a digital computer.

In all these cases, we are faced with the dilemma of using either a simple model which is easy to manipulate and comprehend but which may be too crude a simplification of the physical process or, on the other hand, a highly complex model which may be difficult to develop and expensive to operate to obtain further accuracy. No matter how complex our simulation model may be, the odds are that it still will not mirror the true complexity of the physical processes involved and hence not reflect the physical reality of the situation. While this failure might worry the pure scientist seeking to determine the nature of things, it is of little consequence to the engineering hydrologist who seeks only for a technique which will be sufficiently accurate for his immediate purpose. The research hydrologist comes somewhere between these two extremes. He seeks results and methods that are grounded on a general body of knowledge and hence of wide application.

Digital simulation can also be used to model the total response of a watershed. Here again there is a choice between a simple model, which will of necessity be crude, and a more complex model in which it may be difficult to optimize the parameters owing to their number and their interaction. The simplest model of total watershed operation which gives any semblance of reproducing the behavior of a watershed was discussed earlier in lecture 1 (see fig. 1–8). In its simplest form, such a model might attempt to simulate a watershed by assuming that (1) direct storm runoff could be obtained by routing precipitation excess through a single element of linear storage (K_i); (2) base flow, by routing recharge to ground water through another element of linear storage of longer storage delay time (K_2); (3) the division between precipitation excess and infiltration, by use of a constant infiltration rate (f_c); and (4) the recharge to ground water, by assuming a threshold of field moisture capacity (M). Even in this highly simplified form, four parameters would be required to describe the operation of the model, one for each of the four elements.

If we now seek to make the model more accurate or more realistic by a

detailed simulation of any of the elements, a number of additional parameters will be introduced. The number of parameters quickly increases, and the problem of objectively determining their optimum values can be handled only on a digital computer. The determination of the values of these parameters for optimal representation of the prototype is the key problem in digital simulation of total catchment response. We may insert values of the parameters based on field measurements made either in the watershed under study or in a similar watershed; but it would be foolish to take such measured values or any textbook values as other than indicators of the order of magnitude of the parameters required for simulation.

Once an attempt is made to simulate the operation of a watershed by a specific model, a model parameter which is designed to correspond to some single physical parameter in the field may, in fact, take on other functions in the simulation process. If our desire is to understand in detail the physical processes which are involved, we have no option but to seek the parameters corresponding to these additional functions and synthesize a more complicated model. If, on the other hand, our only purpose is to reconstruct the operation of the prototype and predict the outputs, then we should seek the value of the parameters of our model which optimize its performance.

The best known work on the digital simulation of the total watershed is that done at Stanford University (*21*, *22*, *23*, *40*, *45*). The Stanford model Mark IV is shown on figure 7–6. The various versions of the Stanford model are essentially compromises between the oversimplification of the four-parameter model shown on figure 1–8 and the uncontrollable complexity of a model which would attempt to include everything we know about physical hydrology. The inputs to the model are precipitation in the form of mean hourly rainfall and evapotranspiration in the form of daily means. The outputs are streamflow in the form of: (1) summary tables of mean daily flow; (2) hydrographs of all storms greater than a given base; and (3) some monthly data, such as volume of interflow and actual evapotranspiration and initial and final soil moisture conditions. Other outputs can be obtained on an optional basis. A feature of the model is the division of soil moisture storage into upper zone storage from which evapotranspiration takes place at the potential rate and lower zone storage from which evapotranspiration takes place at a rate less than the potential rate when the upper zone storage is exhausted. The routing of the various flows—overland flow, interflow, ground water flow, and channel flow—is based largely on reservoir routing. The Mark IV model, which is more complicated than earlier versions, allows for such features as overland flow and snowmelt. There are 19 parameters in the model (excluding snowmelt parameters) and four initial parameters for setting the values of the various storage components. All but four of these parameters are estimated from the records or from maps.

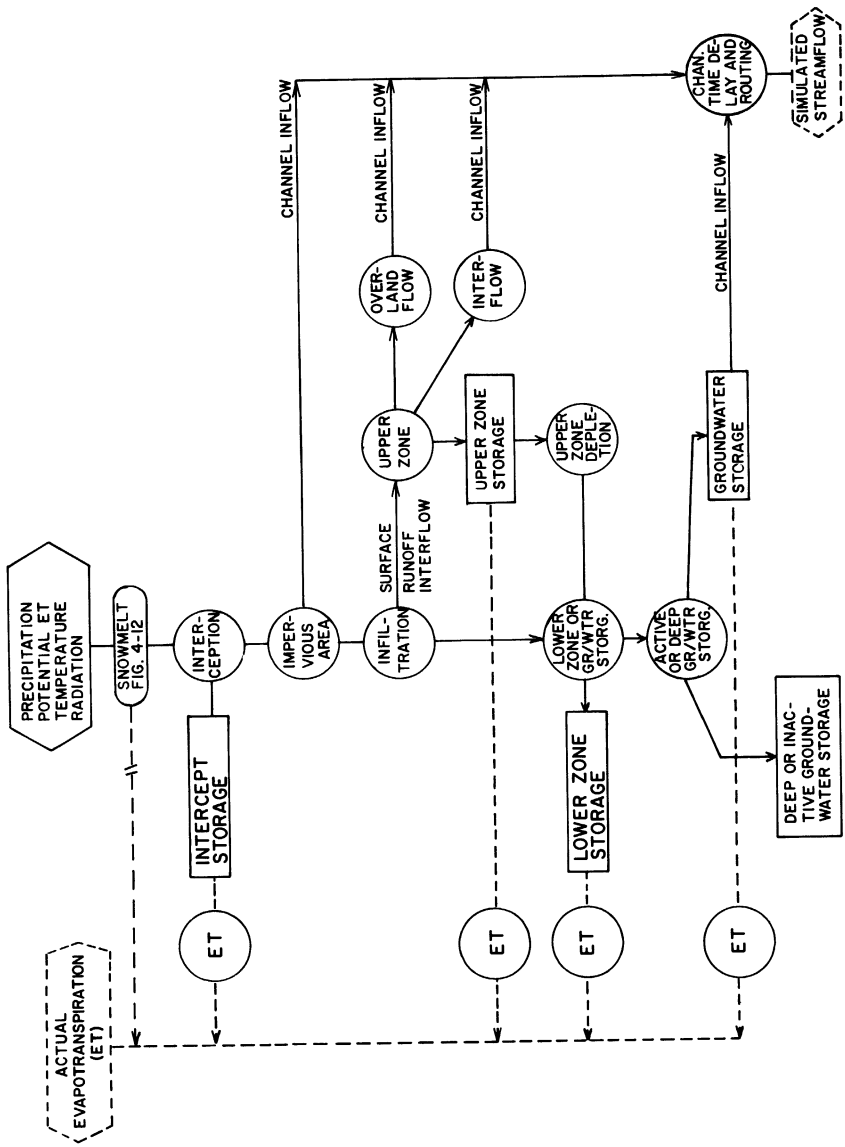

FIGURE 7–6.—Stanford model IV.

An alternative model of the total watershed response is that Dawdy and O'Donnell (*24*), which is shown on figure 7–7. This model is somewhat simpler than the Stanford model and was deliberately designed to be so. While the Stanford model on figure 7–6 is drawn in block diagram form, the Dawdy-O'Donnell model is drawn in terms of tanks and overflows after the manner of Sugawara (*60*) and other Japanese workers in the field. It would be a useful exercise to attempt to redraw each of the models in the other form. Dawdy and O'Donnell were primarily interested in investigating the problem of developing the most efficient techniques for optimizing the parameters of a model, rather than in simulating any particular watershed. For this reason, they first fixed "correct" values of the parameters of the model shown on figure 7–7, generated the output due to a synthetic input and then, starting from erroneous initial parameter values, tried to discover from the record of input and output the predetermined "correct" values of the nine parameters.

The inputs to the Dawdy-O'Donnell model are precipitation and evapotranspiration. The output is the eventual total runoff including surface runoff and base flow. There are nine parameters in the model whose values are to be optimized. R^* is the depression storage which must be satisfied before overland flow occurs. The operation of the linear channel storage is characterized by a single storage delay time, K_s. The Horton equation is used to model the infiltration, thus accumulating three more parameters f_o, f_c, and k. Field

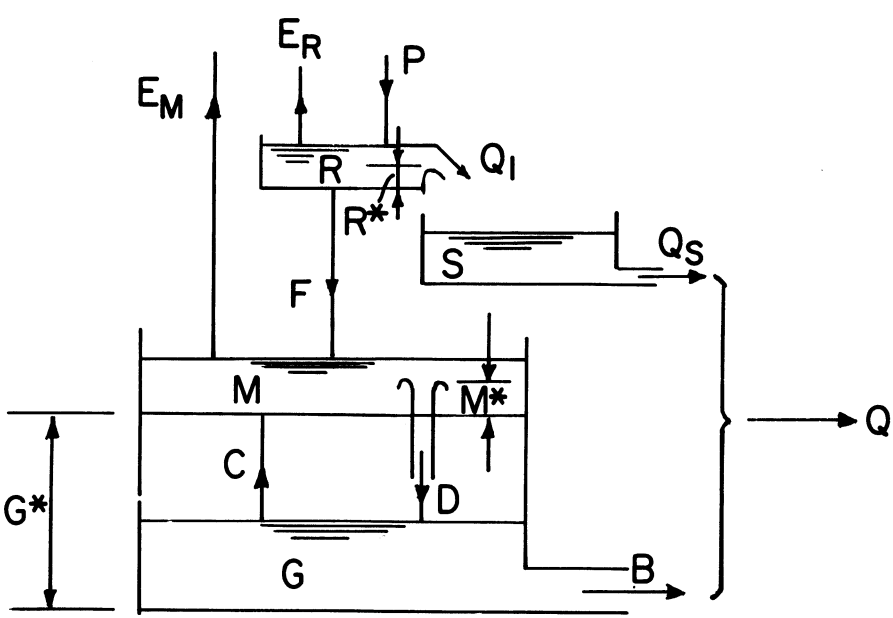

FIGURE 7–7.—Dawdy-O'Donnell model.

moisture capacity is taken as M^* and acts as a threshold on recharge to ground water. Further parameters introduced are a ground water capacity, G^*, which enables the model to simulate water logging under very wet conditions and a maximum rate of capillary rise, C_{max}, to simulate the loss of water from the ground water by capillary rise during very dry periods. The ground water reservoir is assumed to act as a linear reservoir, thus giving the ninth parameter, K_G. This model will be used to illustrate the problem of parameter optimization later in the lecture.

A number of other models of the total catchment response have been developed for various purposes and from various points of view. Among those which are described in the literature are the Tennessee Valley Authority model (*61*, *62*) and models developed in Australia (*12*) and Japan (*46*). Because all models of this type will be compromises, they will be different from one another. The only way in which they can be judged is the efficiency with which they carry out their specific purpose. If models are constructed for different purposes, then it is impossible to compare them. We should be very careful of saying that one model is better than another unless we are sure that the objectives of both models are the same or can be expressed in common terms.

Optimization

Frequent reference has been made above to the optimization of the parameters of a simulation model. The present section deals with this problem of parameter optimization. The output predicted by the simulation model will vary with the value of each of the parameters in the model. If the efficiency of the model in predicting the output of the prototype is defined in terms of an objective criterion, then the optimal values of the model parameters are those values which give the optimum value of this defined criterion of efficiency. The choice between models and the choice of synthesis must necessarily be subjective, but the optimal values of the parameters should be objectively determined. If this is done, we will know (in regard to the application of any particular model to any particular set of data) that the model is operating at its highest efficiency and thus may be fairly compared with any other model operating at its own peak efficiency for the same set of data.

Optimization is essentially a mathematical idea and is, in a sense, somewhat at variance with human nature. In our ordinary decisions of life, we "satisfize" rather than optimize. As soon as a certain level of satisfaction or performance is obtained, human judgment is usually satisfied and does not wish to go to complete optimization. In this context, the decision is a correct one because the effort expended in going from a satisfactory solution to an optimal one may be very great, and the resulting gain may be very small. Indeed, we make the same decision in simulation when we decide to compromise on a model of a certain degree of complexity. However, if we are using mathematical

methods and a digital computer to find values of parameters for our model, then the effort to optimize may not be appreciably greater than that of achieving a certain level of performance and the truly optimal solution has the added advantage of being unique or virtually so. There are many cases in applied hydrology and in hydrologic design in which the correct decision is to halt the process once a certain level of accuracy has been obtained. In scientific research, on the other hand, optimization is necessary to eliminate as much subjectivity as possible from the result.

If we are going to optimize, we can only optimize with respect to some criterion. Unless a specific criterion is invoked, it is not even possible to say whether the optimum has been obtained. Some hydrologists are convinced that they are sufficiently experienced to optimize by personal judgment or to otpimize by eye; if they are explicit in this respect, nobody will be deceived, but very often the subjectivity is implicit. Objective criteria are, however, to be preferred.

If we have chosen a specific model, then the predicted estimated output is a function of the input and of the parameters of that model. Thus, in the case of a simple model with three parameters, we could write:

$$\hat{y}(t) = \phi[x(t), a, b, c] \tag{8}$$

where $x(t)$ is the input, a, b, and c are the parameters of the model, and $\hat{y}(t)$ is the output predicted by the model. The problem of optimization is to find values of a, b, and c so that the predicted values of $\hat{y}(t)$ are as close as possible to the measured values of $y(t)$ in some sense to be defined. The most common criterion is that the sum of the squares of the differences between the predicted outputs and the actual outputs will be a minimum:

$$E(a, b, c) = \sum_i (\hat{y}_i - y_i)^2 = \text{minimum} \tag{9}$$

As an alternative to using a least squares criterion, we could adopt the Chebyshev criterion of minimizing the maximum error:

$$E(a, b, c) = \max_i (\hat{y}_i - y_i) = \text{minimum} \tag{10}$$

In this case, we avoid the occurrence of one or two large deviations between predicted output and measured output whose presence might be accepted in the least squares criterion, since their effect could be smoothed out by a faithful reproduction in the remainder of the record.

Another criterion which can be used is moment matching. We can say that if a model has the same first n statistical moments as the prototype, then the two systems are equivalent in some sense. Actually it can be proved that if the moments of the two impulse responses are identical up to the nth moment, then the systems will give identical output for any input which is

a polynomial of the degree n or less. Consequently, a model system with a given number of parameters will reproduce the behavior of the prototype for polynomial inputs if the values of these parameters are determined by matching the appropriate number of moments of the model with those of the prototype:

$$\mu_R(\hat{y}) = \phi(a, b, c) = \mu_R(y) \tag{11}$$

Where a large number of parameters are involved, the method of moment matching is not suitable because higher order moments become unreliable due to the distorting effect of errors in the tail of the function on the values of the moments. However, the method of moments has the great value that in cases where the moments of the model system can be expressed as a simple function of the parameters of the model, then the parameters can be relatively easily derived.

For criteria such as least squares or minimax error, direct derivation of the parameters may be far from easy. In certain cases, it is possible to express the criterion to be minimized as a function of the parameters. To differentiate this function with respect to each parameter in turn, set all the results equal to zero and solve the resulting simultaneous equations to find the optimal value of the parameters. For any but the simplest model, it will probably be simpler to optimize the parameters by using a systematic search technique to find those parameter values which give the minimum value of the error function. Such a search technique gives rise to its own difficulties, which will be discussed later in this section.

It is often necessary to decide whether we wish to put bounds on the values of the parameters. Any model with which we attempt to simulate the prototype will be based to a greater or lesser degree on our assumptions about the nature of the physical processes in the hydrologic system under investigation. We are then faced with a dilemma if the optimized values of the parameter of this model turn out to be physically unrealistic. For example, we might seek to simulate direct storm runoff by a cascade of equal linear storage elements. Such a model has two parameters, the storage delay time (K) of the individual elements and the number of equal elements (n).

An analysis of the data by moment matching might indicate that both n and K are negative. Similarly, we might insert into a model of a watershed the Horton infiltration equation and then find on optimizing the parameters that the value of f_c turns out to be 1,000 feet per second. Even though we are interested in predicting the output and the unrealistic parameter values give a good prediction, we are inclined to reject such values and put bounds on the variation of the parameter. This is to bring a subjective element into our simulation and to import knowledge from physical hydrology into parametric hydrology. It may or may not be the right thing to do.

If the restriction of the parameter to realistic values does not increase the error function much above its minimum value, then it is certainly permissible

to use the model with the restricted range of parameters. If, however, the error function is greatly increased by refusing to allow the parameters to take on unrealistic values, then this may be an indication that the model itself is at fault and should be modified or replaced. One consequence of optimizing subject to restraint is that the mathematics (and the computation) become more difficult. In an analytical solution, partial derivatives must be replaced by the use of Lagrange multipliers. If the error function and restraints are not linear, we may be involved in nonlinear programing which means serious computational problems. In a systematic search technique, the extra difficulty created by the introduction of bounds on the parameters is not nearly as serious. It is important, however, to remember that the imposition of a restraint always results in some loss of optimality. Where the error function does not vary sharply, then the effect may not be serious.

As in all computations, our final task is to interpret our results. In the simulation of hydrologic systems, it is difficult to know how much meaning should be attached to the optimal values of the parameters found. It is probably correct to say that the answer to this problem depends on the model used. If the model is an extremely good representation of the prototype, then there is a good chance that the parameters are of physical significance, and there is likely to be a close connection between the values of these physical parameters and the corresponding field parameters of the prototype. If, however, the model is much more simple than the prototype, then there is no guarantee that the parameters will correspond to the real physical parameters of the prototype. It may well be that a particular parameter in the model is an amalgam of several parameters in the prototype, but there is no guarantee of this. It may be dangerous to try and give a close physical meaning to some of the parameters found by optimization. It is safer to consider these parameters as the parameters of best fit and be satisfied with a model which does what we require it to do, namely, predict the output within a given margin of error.

The optimization of model parameters by a systematic search technique is a powerful approach made possible by the use of digital computers. It is, however, not quite as easy as it might at first appear. If you consider the almost trivial case of a two-parameter model, then the problem of optimizing these parameters subject to a least squares error criterion can be easily illustrated. We can imagine the two parameters a and b as measured along coordinate axes and the squares of the deviations between the predicted and actual outputs as indicated by contours in the plane defined by these axes. The problem of optimizing our parameters is then equivalent to searching this relief map for the highest peak or the lowest valley, depending on the way in which we pose the problem. We have to search until we get, not merely a local optimum (maximum or minimum), but an absolute optimum. To examine every point of the plane would be prohibitive even to this simple

example. In using a search technique, we have no guarantee that we will find the true optimum.

The simplest method of searching is to start at some point on the boundary and travel parallel to the other axis until the optimum on that line is obtained. The direction of search can then be changed to a direction at right angles to that just traversed and the search continued until the optimum along that line is obtained. Again the direction can be changed and the process repeated until a point has been obtained, which is the optimum in its immediate neighborhood. There would be no guarantee, however, that it would be an absolute optimum. This simple method of searching turns out on examination to be quite inefficient even for a small number of parameters, and more sophisticated techniques have been developed (*63*, *64*). Some of these are based on the steepest descent methods, which are considerably more efficient than the univariate technique described above. However, once more than a few parameters are involved, even the sophisticated gradient methods become inefficient compared with a direct search technique.

We saw that the simplest model for a total watershed would involve at least four parameters and that models now being developed and used have more than 20 parameters. Even engineers trained in descriptive geometry would find it hard to visualize the complexity of the searching technique in such a multidimensional problem.

A direct search technique based on Rosenbroek's method (*52*) was used by Dawdy and O'Donnell for the systematic optimization of the parameters of the model shown in figure 7–7 (*24*). The search through the multidimensional parameter space was made in a sequence of stages. In the first stage, an initial set of parameter values was assumed, and searches were made along the parameter axes. At the start of each subsequent stage, a new set of orthogonal axes was chosen for the search, the best direction for the new search being determined from the progress made in the previous stage. During each stage, movements were made along the new axes subject to their producing an improvement in the objective function and following a specific set of rules about the size and direction of movement along the axes. These rules also specified when a stage should end and a new set of orthogonal axes begin. Progress was usually rapid in the first five or six stages but tailed off thereafter. The whole process was revitalized by starting a new round of stages with the latest parameter values from the end of the previous round of stages but starting again with the parameter axes as the orthogonal search directions.

It was easier to obtain reasonable approximations to the values of some of the parameters than others. If the parameters were initially set with a large error, some of them would be within a few percentage points of the true value after a single round of stages, whereas others might show little improvement after 20 rounds, and some might end up further from their true value. A parameter can only be readily optimized if it strongly affects the output and

the effect can be isolated in some fashion. Consequently, if the particular input for which the model is tested does not call a particular parameter into play, the effect of this parameter cannot be isolated or its value determined from that particular record. The parameter in question can take any value over a wide range without affecting the objective function. Thus, the operation or even the existence of the parameter for maximum capillary rise in the Dawdy-O'Donnell model could only become apparent if a record was available containing a long dry spell. Since the parameters difficult to optimize are those which do not affect the output for the particular input used, failure to find their values will not affect the model as a predictor provided it is used only for inputs which are, by and large, of a similar type to the input used for the optimization of the parameters.

There is a great deal more work to be done before the comparison of simulation models for hydrologic systems can be put on a proper objective basis. A model structure or a set of parameter values that predict efficiently for one type of input and one type of criterion of fit may prove quite inefficient for another set of input data or another criterion of prediction. We must be clear at all times what criterion we are using and what type of output we are trying to predict. Table 7–1 is taken from a paper by Dawdy and Thompson (*25*) and illustrates the effect of the use of different criteria on the optimization process. An attempt was made to fit the model developed by Dawdy and O'Donnell to data for the Arroyo Seco, near Pasadena. The first objective taken was to minimize the sums of the squares of the logarithms of the ratio of computed to observed monthly discharges. As shown in the upper half of table 7–1, 482 trials resulted in the values of the objective function. The criterion was then changed to one based on daily discharges rather than

TABLE 7–1.—*Resvlts of three optimizing runs during 1943–44 in Arroyo Seco*

Optimizing criterion	Sum of squared deviations of logarithms			
	Try	Months	Days	Peaks
Months	0	0.68	48.3	0.63
	89	.35	28.2	.49
	344	.18	24.1	.50
	482	.17	24.7	.49
Days	0	.17	24.7	.49
	9	.18	24.5	.48
	360	.26	15.1	1.02
Peaks	0	.73	40.8	1.11
	6	.72	40.7	1.09
	35	.67	58.0	.35
	156	1.61	96.2	.01

Source: Dawdy and Thompson (*25*).

monthly discharges. The next 360 trials were made on this basis with the results shown in the middle of table 7–1. The last 156 trials shown on the bottom half of the table 7–1 were based on a criterion of peak discharges. For each trial, the value of the objective function according to each criterion was evaluated though only the objective criterion indicated was used to search for the optimal values of the parameters.

We can see from table 7–1 whether an optimization based on months goes anywhere near getting the degree of optimization which would be obtained if we concentrated on daily discharges or on peaks. It can be seen that optimization based on monthly discharges gives values of the parameters which are not too far from the optimal for daily discharges and that optimization based on daily discharges gives values of the parameters that are not too far from the optimal for monthly discharges. The differences, though serious enough, or not enormous. However, when we compare the value of the objective function when the parameters are optimized on the basis of peaks with the value when the parameters are optimized on the basis of their daily or monthly discharges, we find a tremendous difference. The criterion for peak matching can be reduced to 0.01 when optimization is based on the peaks themselves but only reaches a value of 0.49 for optimization based on months and 1.02 for optimization based on daily discharges.

These results are extremely interesting when we consider that what is involved here is not a change of model but merely a change in choice of the period of flow, which is the basis of the optimization. The model is a relatively complex one, and the parameters used all have definite physical implications. Nevertheless, it is not capable of acting as a general-purpose model for peaks, daily discharges, and monthly discharges. If we are only interested in one of these at a time we can adjust our model parameters accordingly. It would also be possible to define a weighted objective function which would take into account each of these separate objectives in some fashion. The weighting of the different objectives, however, would itself tend to be subjective.

There is a scope for a great deal of work in the field of digital simulation. A part of this should be devoted to a systematic exploration of the subject using both noise-free synthetic data and synthetic data with controlled error. It should, for example, be possible to determine from the input and output records of a system whether or not one or more thresholds occur in the system. At the same time, another part of the work should be concerned with the simulation of field data and the further problems involved.

Analogs and Physical Models

The use of analogs and physical models comes within the scope of parametric hydrology since these analogs and models are used to simulate the action of the prototype systems. Analogs may be divided into two types—indirect

analogs which solve the mathematical equations thought to govern the phenomena, and direct analogs which attempt to simulate the physical behavior of the prototypes by an analogous physical system. Though physical models have been used for a long time in hydraulics, their use in simulating hydrologic systems gives rise to a number of difficulties which have not as yet been overcome.

As mentioned above, an indirect analog seeks to solve the mathematical equations which themselves simulate the action of the prototype system. The most widely used type of indirect analog is the indirect electronic analog, also known as an analog computer or a differential analyzer. The actual solution of the problem involves the standard techniques common to the large variety of problems for which the analog computer is suitable. In the use of an indirect analog for hydrologic systems, the key element is the formulation of the mathematical equations to be solved, or the synthesis of conceptual models whose mathematical equations can easily be written down. This may be illustrated for the case of a very simple conceptual model consisting of two linear reservoirs in series. Actually, as will be seen later, this particular model can be readily represented by a simple direct analog.

For the first linear reservoir, the inflow (I) and the outflow (Q_1) are connected by the relationship:

$$I-Q_1=K\frac{dQ_1}{dt} \tag{12}$$

where K is the storage delay time of the reservoir. If two such elements are cascaded, that is, are placed in series so that the output from the first (Q_1) is the inflow to the second, we have for the operation of the second element the relationship:

$$Q_1-Q_2=K\frac{dQ_2}{dt} \tag{13}$$

where Q_2 is the outflow from the second reservoir. Substitution of the value of Q_1 from equation 13 into equation 12 gives:

$$I-Q_2-K\frac{dQ_2}{dt}=K\cdot\frac{dQ_2}{dt}+K^2\cdot\frac{d^2Q_2}{dt^2} \tag{14a}$$

or

$$K^2\frac{d^2Q_2}{dt^2}+2K\frac{dQ_2}{dt}+Q_2=I \tag{14b}$$

or

$$K^2\frac{d^2Q_2}{dt^2}=-2K\frac{dQ_2}{dt}-Q_2+I \tag{14c}$$

In setting up an indirect analog for any system, it is wise to follow a basic step-by-step procedure (*4*). The first step in the basic procedure is to draw a block diagram of the type shown in figure 7–8 for two linear reservoirs in series represented by equation 14. The highest derivative in the differential equation is assumed to be known, and blocks are inserted to integrate it to obtain the lower order derivatives and the unknown function itself, as shown in figure 7–8. The appropriate terms are then combined by elementary arithematical operations, also shown in the diagram by blocks, to construct the highest derivative in accordance with the equation which is being simulated. Thus, in our case, the first derivative is multiplied by $2K$ and both the derivate and the unknown function Q are reversed in sign before being added to the original inflow; the sum of these three components is then divided by K^2 to produce the second derivative.

Since the scalers, adders, and integrators in an analog circuit reverse the sign of the voltage, the block diagram must next be modified to allow for the change in sign; at the same time, the individual symbols for the various opera-

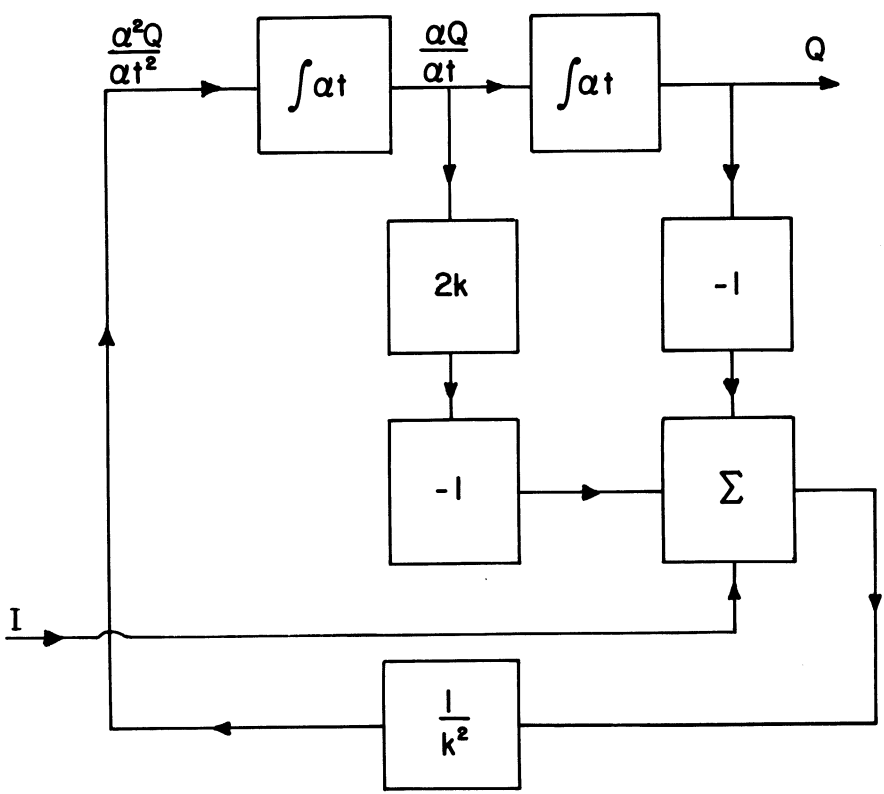

FIGURE 7–8.—Block diagram for indirect analog.

tions may be inserted as shown on figure 7–9. It may be possible at the same time to take advantage of the possibility of combining several operations into one block.

After the block diagram has been modified, an equation is written for each block in the diagram, and the scale factor is determined for each variable in the circuit. This scaling is necessary to avoid overloading any element in the computing circuit. To do this, it is necessary to have some estimate of the maximum value of each of the variables. The analog of the system can now be redrawn as shown in figure 7–10 and is seen to require two integrators and one operational amplifier together with the necessary potentiometers. The indirect analog has the advantage of allowing an extremely rapid adjustment of parameters and visual presentation of the comparison of the simulated output and the actual output. It has great advantages for exploratory work and could be used with advantage in hydrologic investigations. A team at Utah State University has pioneered the simulation of the total watershed response on an electronic computer. The Mark I model contained 46 operational amplifiers, three multipliers, two function generators, and 192 potentiometers. The Mark II model contains additions to the above components together with some nonlinear elements and arrangement for greater flexibility of operation (*51*).

There are a variety of types of direct electrical analog. They may be classified as continuous direct analogs, discrete direct analogs, or combined direct

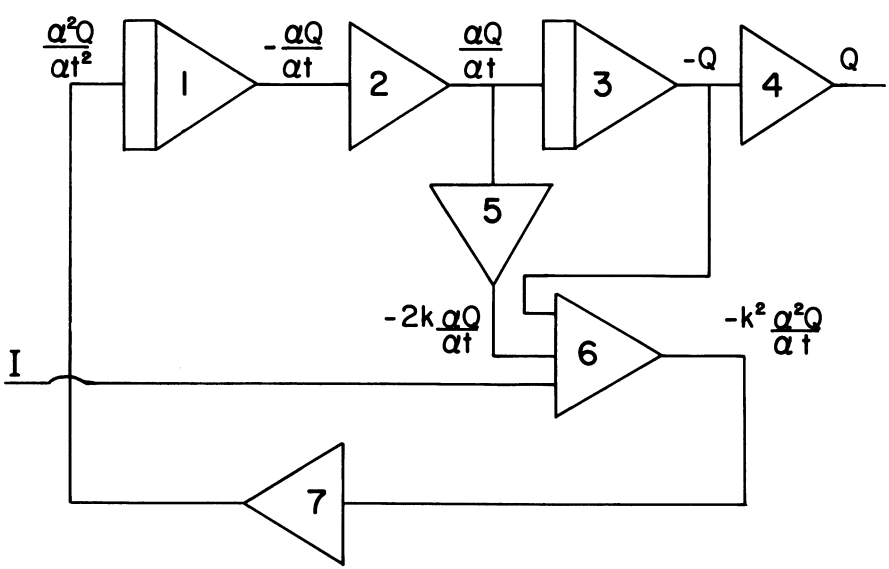

FIGURE 7–9.—Modified block diagram.

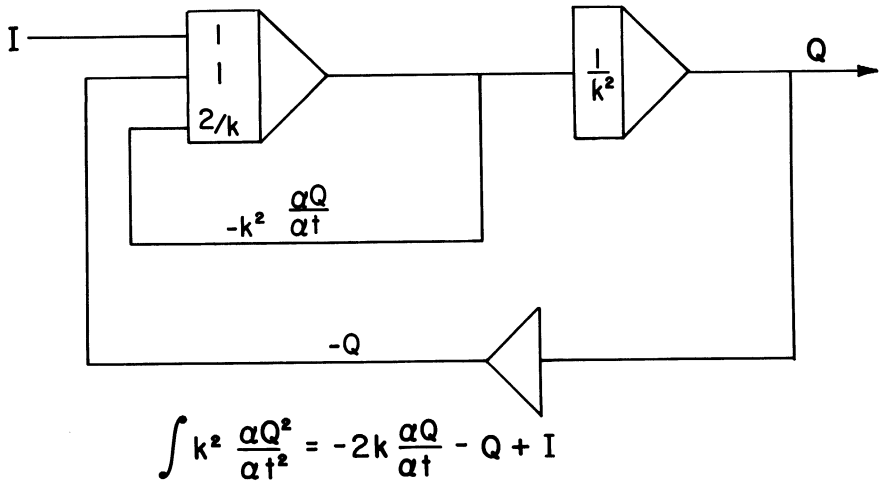

FIGURE 7–10.—Indirect analog for two linear reservoirs in series.

analogs. They have been used widely in the field of ground water flow (*5*, *20*, *56*), but there have also been a number of applications to flow in the unsaturated zone (*13*, *14*, *31*) and to flow in open channels (*32*, *38*, *55*). Two well-known forms of continuous direct electrical analog are the electrolytic tank and Teledeltos resistance paper. These analogs are used in studying the flow through porous media by utilizing the similarity between the differential equations governing flow through porous media and those governing the flow of electrical currents through conductive materials. For exploratory studies, a simple electrolytic tank or Teledeltos resistance paper (or sheets of some other conductive material) may be used. In the case of the electrolytic tank, more sophisticated and accurate work is possible in both two and three dimensions. The method can be applied to anisotropic media by means of scale distortion. In the case of continuous analogs, every point in the analog simulates the corresponding point in the prototype.

Discrete direct analogs have been more widely used in hydrology than the continuous type. Such discrete analogs are usually discretized only in respect of the space dimension, and time is left as a continuous variable when unsteady flow cases are studied. Such a discretization is subject to the same types of error as are involved in the representation of a differential equation by its finite difference form.

For problems involving the steady flow of ground water, a complex prototype system can be simulated by a direct analog made up from resistances only. These resistances may be set out in either a symmetrical or an asymmetrical network and may be applied to two-dimensional plane flow, axisymmetrical flow, or three-dimensional flow. For other types of electrical analog, it is necessary to determine the scaling of the analog carefully.

Unsteady flow problems in porous media can be successfully studied by an

analog network containing both resistances and capacitors (R–C network). In such analogs, the electrical resistances simulate the resistance to flow, and the capacitors simulate the storage properties of the aquifer. A discrete direct analog for the one-dimensional linear diffusion equation used to solve land drainage problems is shown in figure 7–11. Two types of R–C network analogs are used. Slow analogs (time constants of the order of 10 minutes) record the solution of the problem on paper charts, while rapid or repetitive analogs (time constants of the order of a tenth of a second) show the solution on an oscilloscope.

Direct electrical analogs based on R–C networks have been applied to other phases of the hydrologic cycle besides the ground water phase. Because the flow through unsaturated porous media can be represented by a diffusion type equation, it is possible to represent this phase of the hydrologic cycle by a similar analog to that used for ground water flow. It can also be shown that a diffusion model gives a very close approximation to the complete solution of the linearized equations for unsteady flow in open channels. Consequently, the same type of R–C analog network could be used in this case also. This suggests the possibility of simulating the various subsystems of the hydrologic cycle by the same type of network analog.

Many other types of direct discrete electrical analogs have been applied to surface water hydrology. Some of these were attempts to simulate specific models of the hydrologic process as in the case of the electrical analog of the Muskingum (*41*) and Kalinin-Milyukov (*37*) methods of flood routing. Some parts of the hydrologic cycle can be simulated by conceptual models consisting of standard elements, such as distortionless linear channels and linear storage elements. These elements can, in turn, be simulated by a direct electrical analog and the operation of the prototype system studied in this way.

Figures 7–11 and 7–13 show three simple elements which could be used as

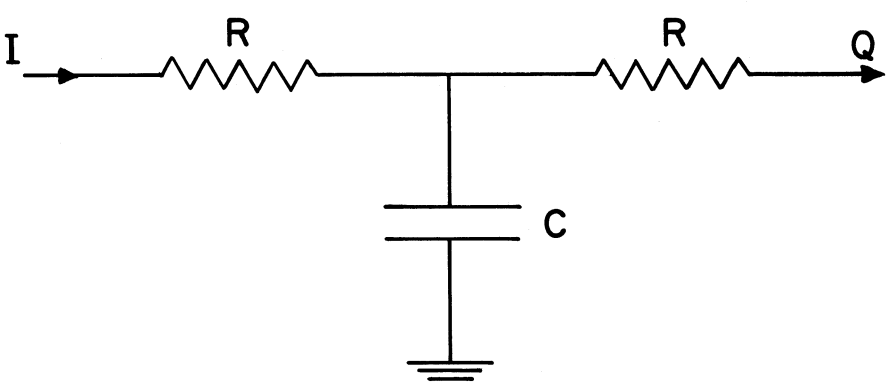

FIGURE 7–11.—Analog for unsteady ground water flow.

building blocks in a direct electrical analog of a hydrologic system or of a conceptual model of that hydrologic system. The element in figure 7–11 represents the typical element used to simulate a diffusion-type equation already referred to. These elements can be linked as shown and as mentioned above, more than one phase of the hydrologic cycle might be simulated by the use of such elements. Figure 7–12 shows the direct electrical analog of a linear storage element and the connection of two such elements in series. The latter arrangement corresponds to the indirect analog for the same system shown on figure 7–10. Comparison of the two analogs shows little similarity between them. Figure 7–13 shows the direct analog circuit suggested by Shen (*55*) for a distortionless linear channel. Such an element could be used as part of a lag and route model or similar conceptual model.

Because any function can be expanded in terms of Laguerre functions, it can be shown theoretically that any linear system can be represented by an analog system consisting entirely of linear storage elements, though the analog system might need to include a large number of such elements connected in series and in parallel. If a particular system can be represented by a small number of such elements, then a direct analog with elements as shown on figure 7–12 can be constructed.

The basic types of direct electrical analogs described above can be adapted to deal with special problems. It is possible to combine continuous and discrete elements in the one analog. While the discussion given above is concentrated on the simulation of linearized hydrologic systems, the techniques indicated can be adpated to include nonlinear elements, though this naturally introduces certain complexities and difficulties.

There are a number of other direct analogs besides electrical analogs, and some of these have potential applications in simulating hydrologic systems. The best known nonelectrical direct analog is the Hele-Shaw apparatus or viscous flow analog, which is widely used in two-dimensional ground water investigations. In this type of analog, a viscous liquid is allowed to flow between parallel plates whose distance apart is about 1 mm. Properly used, the Hele-Shaw model can be a powerful scientific instrument and not just a piece of demonstration apparatus. Vertical versions of the Hele-Shaw apparatus can be used to study such problems as flow to a parallel drainage system,

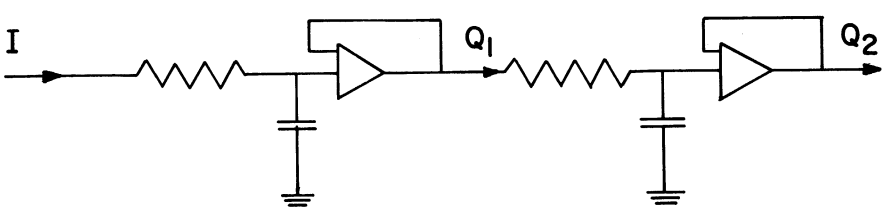

FIGURE 7–12.—Direct analog two linear reservoirs.

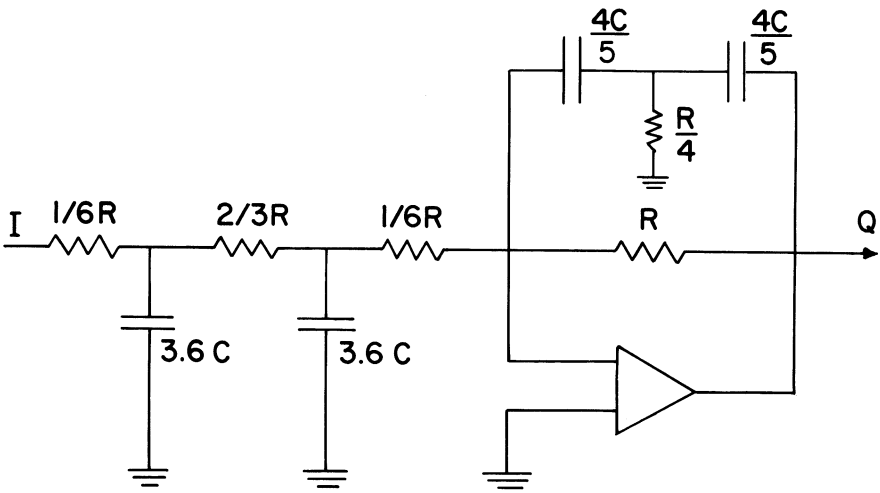

FIGURE 7–13.—Direct analog for distortionless linear channel.

while horizontal Hele-Shaw models can be used to study conditions in a large-scale aquifer. Another analog with possible applications in the study of ground water systems is the membrane analogy, which has been applied to some problems of flow towards wells.

The fact that still other analogs are available for hydrologic systems is illustrated by the recent development by Diskin (*26*) of a salt-concentration analogy for flow from a watershed. It would be a grave pity if absorption with the digital computer was to lead hydrologists to neglect the many useful tools available in the form of analogs.

If the space between a pair of parallel plates is filled with sand, or glass beads, we have not a Hele-Shaw apparatus but a sandbox or granular model. Such a device is more correctly described as a physical model than an analog. Many problems involving the flow in unsaturated and saturated porous media can be studied on such a model (*6*). The effect of the capillary fringe is relatively larger on such a model than in the prototype, and this may give rise to considerable difficulty.

In the case of unsaturated flow, there are difficulties in the problem of model scaling, but recent work indicates that these problems are being overcome. In one particular version of the granular model, the filling material is glass beads or crushed glass, the walls are transparent, and the liquid used has the same refractive index as that of the glass. This enables themovement of a dye tracer to be followed with ease. Columns of glass beads are used by soil physicists in the study of the problems of infiltration and percolation of water in the unsaturated zone. These represent idealization of the actual movement

in the soil and as such are attempts to simulate the prototype soil system on simplified physical models.

Problems on the boundary between hydrology and open channel hydraulics can be studied by the use of the hydraulic models, for which some highly developed and widely tested techniques are available. The model of the Mississippi, operated by the Corps of Engineers, handles what is essentially a hydrologic problem—the routing of floods on the Mississippi and its tributaries. The reduction in the time scale of the model compared with the prototype enables this model to be used for making predictions. Many proponents of numerical computation object to the technique of introducing artificial roughness to ensure verification of a hydraulic model. Such people seem to forget that the digital simulation of the same problem uses a so-called roughness coefficient which is more a repository of unknown effects than a roughness factor. In many digital simulations, the values of Manning's n are adjusted both with stage and along the channel until the required downstream discharge is obtained. Whether we simulate on the hydraulic model or on a digital computer, verification is necessary if our work is to be worthwhile. In either case, the devices used to ensure verification are not always logically defensible.

An unusual model of the hydrologic system of Lake Hefner was tested in a wind tunnel at Colorado State University (*15*). The model laws were investigated and the evaporation from the lake was successfully studied on a small scale.

The final type of model to be considered is a physical model of an entire watershed. If such models attempt to do more than solve purely hydraulic problems on a laboratory scale, they run into a great number of difficulties[2] (*17, 29, 30*). Research is now going on in a number of countries on the behavior both of laboratory-size catchments and of highly instrumented outdoor "model" catchments. What has been reported so far tends to underline the difficulties involved in this line of research. It may not be possible to use such small-scale physical models as prediction tools until such time as we understand the inherent "self-similarities" imposed on hydrologic systems by geomorphological processes. Nevertheless, the results from such experiments on laboratory catchments carried out under controlled and repeatable conditions will yield extremely useful data which should lead to a better understanding of hydrologic processes and of the manner in which response parameters vary with system parameters. Data from such small-scale laboratory catchments, which would be intermediate between synthetic mathematical data and field observations, should prove extremely useful for testing other methods of simulation.

---

[2] MAMISAO, J. P. DEVELOPMENT OF AN AGRICULTURAL WATERSHED BY SIMILTUDE. M.S. Thesis, Iowa State Col., Ames. 1952.

Problems on Simulation

1. Discuss one particular type of simulation in terms of the phases of the simulation process discussed on page 150.

2. Contrast the different methods of simulation from the point of view of convenience, accuracy, and stability for some part of the hydrologic cycle with which you are familiar.

3. Appendix table 5 shows some digital computer data for the linear response of the uniform open channel. Hopefully, this data will be used to develop a method of predicting the time-to-peak for values of lengths of 5, 50, and 100 miles and slopes of 1, 20, and 50 feet per mile. What sort of regression analysis would be suitable in this particular case, and how would you go about applying it to this particular problem?

4. Describe how the problem posed in question 3 might be solved by analog simulation.

5. Describe what would be necessary if the same problem were to be solved by a series of flume experiments.

6. What criteria of fit are most commonly used in deriving empirical expressions to fit hydrologic data? What other criteria could also be used? Discuss the merits of the different criteria.

7. Compute the evaporation and potential transpiration by a number of formulas for the data given in Appendix table 8. Under what conditions would you expect each empirical formula to work best? Can you draw a diagram illustrating the different assumptions made about the relationship between actual and potential transpiration?

8. Discuss the relationship between a complex simulation of the snowmelt process and a formula relating the rate of snowmelt to degree days.

9. Compare a number of the total catchment models which have been proposed in the literature. What are their common elements and how do they differ?

10. Discuss the method described in the literature to obtain the optimum parameters for various models of (a) the unit hydrograph, (b) ground water response, and (c) total catchment response. Discuss how these methods might be improved, and estimate the optimum parameters for some example in literature which, in your opinion, have not been optimized.

11. Derive a direct and an indirect analog representation for both the Horton and the Philip equations for infiltration.

12. Draw up a classification of the various types of analog and physical models used in hydrology.

Literature Cited

(1) AMOROCHO, J., and ESPILDORA, B.
1966. MATHEMATICAL SIMULATION OF THE SNOW MELTING PROCESSES. Water Sci. and Engin. Paper 3001, 156 pp. University of California, Davis.

(2) ——— and HART, W. E.
1965. THE USE OF LABORATORY CATCHMENTS IN THE STUDY OF HYDROLOGIC SYSTEMS. Jour. Hydrol. 3(2): 106–123.

(3) ANDERSON, E. A., and CRAWFORD, N. H.
1964. THE SYNTHESIS OF CONTINUOUS SNOW MELT RUNOFF HYDROGRAPHS ON A DIGITAL COMPUTER. Dept. Civ. Engin. Tech. Rpt. 36, 103 pp. Stanford University, Calif.

(4) ASHLEY, J. R.
1963. INTRODUCTION TO ANALOG COMPUTATION. 294 pp. New York.

(5) BEAR, J., and SCHWARZ, J.
1966. ELECTRIC ANALOG FOR REGIONAL GROUNDWATER STUDIES. Underground Water Storage Study. TAHAL Tech. Rpt. 22. Tel-Aviv.

(6) ——— ZASLAVSKY, D., and IRMAY, S.
1968. PHYSICAL PRINCIPLES OF WATER PERCOLATION AND SEEPAGE. UNESCO Arid Zone Res. XXIX, 465 pp., illus.

(7) BECKER, A.
1966. ERGEBNISSE EINER UNTERSUCHUNG UBER DIE STRUCKTUR DER KOAXIALEN GRAPHISCHEN STARKREGEN—ABFLUSS—BEZIEHUNGEN [RESULTS OF AN INVESTIGATION REGARDING THE STRUCTURE OF THE COAXIAL GRAPHIC HEAVY RAIN RUNOFF-RELATIONS]. Wasserwirtschaft-Wassertech. 16(3): 121–130.

(8) ———
1966. ON THE STRUCTURE OF COAXIAL GRAPHICAL RAINFALL-RUNOFF RELATIONS. Internatl. Assoc. Sci. Hydrol. Bul. XI(2): 121–130.

(9) ———
1967. THRESHOLD CONSIDERATIONS AND THEIR GENERAL IMPORTANCE FOR HYDROLOGIC SYSTEMS INVESTIGATION. Fort Collins International Hydrology Symposium. Compt. Rend. 1: 94–102.

(10) ———
1968. ———
Wasserwirtschaft-Wassertech. 18(1): 16–21.

(11) BENSON, M. A.
1962. FACTORS INFLUENCING THE OCCURRENCE OF FLOODS IN HUMID REGIONS OF DIVERSE TERRAIN. U.S. Geol. Survey Water-Supply Paper 580–B, 30 pp.

(12) BROUGHTON, W. C.
1965. A NEW SIMULATION TECHNIQUE FOR ESTIMATING CATCHMENT YIELD. Water Res. Lab. Rpt. 78, 87 pp., illus. University of New South Wales, Austral.

(13) BOUWER, H.
1960. A STUDY OF FINAL INFILTRATION RATES FROM CYLINDER INFILTROMETERS AND IRRIGATION FURROWS WITH AN ELECTRICAL RESISTANCE NETWORK. Trans. 7th Cong. Internatl. Soc. Soil Sci. 1: 448–457.

(14) ——— and LITTLE, W. C.
1959. A UNIFYING NUMERICAL SOLUTION FOR TWO DIMENSIONAL STEADY FLOW PROBLEMS IN POROUS MEDIA WITH AN ELECTRICAL RESISTANCE NETWORK. Soil Sci. Soc. Amer. Proc. 23: 91–96.

(15) CERMAK, J. E., and KOLOSEUS, H. J.
1953, 1954. LAKE HEFNER MODEL STUDIES OF WIND STRUCTURE AND EVAPORATION. Final reports 1 and 2, November 1953 and July 1954. Dept. Civ. Engin., Colorado A&M College, Fort Collins.

(16) CHEMERENKO, E. P.
1966. PRIMÈNENIYE ELEKTRONNOI VICHISLITELNOI MASHINI VO BREMYA GIDROLICHESKI VICHESLENII [USE OF ELECTRONIC COMPUTERS DURING HYDROLOGICAL CALCULATIONS]. Meteorologiya i Gidrologiya Zhuzurnal. Leningrad.

(17) CHERY, D. L.
1955. CONSTRUCTION, INSTRUMENTATION AND PRELIMINARY VERIFICATION OF PHYSICAL HYDROLOGIC MODEL. 152 pp. Utah Water Res. Lab., Utah State Univ., Logan.

(18) CHORAFAS, D. N.
1965. SYSTEMS AND SIMULATION. 503 pp. New York.

(19) CHOW, VEN TE, ed.
1964. APPLICATIONS OF ELECTRONIC COMPUTERS IN HYDROLOGY. *His* Handbook of Applied Hydrology. Sec. 29, 30 pp. New York.

(20) COLORADO STATE UNIVERSITY.
1963. SYMPOSIUM ON TRANSIENT GROUNDWATER HYDRAULICS. Fort Collins.

(21) CRAWFORD, N. H., and LINSLEY, R. K.
1962. THE SYNTHESIS OF CONTINUOUS STREAMFLOW HYDROGRAPH ON A DIGITAL COMPUTER. Dept. Civ. Engin., Tech. Rpt. 12, 121 pp. Stanford University, Calif.

(22) ——— and LINSLEY, R. K.
1963. CONCEPTUAL MODEL OF THE HYDROLOGIC CYCLE. Internatl. Assoc. Sci. Hydrol. Pub. 62: 573–587. Gentbrugge.

(23) ——— and LINSLEY, R. K.
1966. DIGITAL SIMULATION IN HYDROLOGY: STANFORD WATERSHED MODEL MARK IV. Dept. Civ. Engin., Tech. Rpt. 39, 210 pp. Stanford University, Calif.

(24) DAWDY, D. R., and O'DONNELL, T.
1965. MATHEMATICAL MODELS OF CATCHMENT BEHAVIOR. Amer. Soc. Civ. Engin., Jour. Hydraulics Div. 91(HY4): 123–139.

(25) ——— and THOMPSON, T. H.
1967. DIGITAL COMPUTER SIMULATION IN HYDROLOGY. Amer. Water Works Assoc. Jour. 59(6): 685–688.

(26) DISKIN, M. H.
1967. A DISPERSION ANALOG MODEL FOR WATERSHED SYSTEMS. International Hydrologic Symposium Proc., Compt. Rend. 1: 38–45, Fort Collins, Colo.

(27) EZEKIEL, M., and FOX, K. A.
1959. METHODS OF CORRELATION AND REGRESSION ANALYSIS: LINEAR AND CURVILINEAR. Ed. 3, 522 pp., illus. New York.

(28) FIERING, M.
1967. STREAMFLOW SYNTHESIS. 139 pp. Boston.

(29) GRACE, R. A., and EAGLESON, P. S.
1965. SIMILARITY CRITERIA IN THE SURFACE RUNOFF PROCESS. Hydrodynamics Lab. Rpt. 77, School of Engineering, Massachusetts Institute of Technology, Cambridge.

(30) ———
1966. CONSTRUCTION AND USE OF A PHYSICAL MODEL OF THE RAINFALL-RUNOFF PROCESS. Hydrodynamics Lab. Tech. Note 11. School of Engineering, Massachusetts Institute of Technology, Cambridge.

(31) HANKS, R. J., and BOWERS, S. A.
1960. NON-STEADY-STATE MOISTURE, TEMPERATURE, AND SOIL AIR PRESSURE APPROXIMATION WITH AN ELECTRIC SIMULATOR. Soil Science Soc. Amer. Proc. 24(4): 247–252.

(32) HARDER, J. A.
1962. ANALOG MODELS FOR FLOOD CONTROL SYSTEMS. Amer. Soc. Civ. Engin., Jour. Hydraulics Div. 88(HY2): 63–74.

(33) HARMAN, H. H.
1960. MODERN FACTOR ANALYSIS. 471 pp. Chicago.

(34) HARRIS, B., SHARP, A. L., GIBBS, A. E., and OWEN, W. J.
1961. AN IMPROVED STATISTICAL MODEL FOR EVALUATING PARAMETERS AFFECTING WATER YIELDS OF BASINS. Jour. Geophys. Res. 66(10): 3319.

(35) HUGGINS, L. F., and MONKE, E. J.
1966. THE MATHEMATICAL SIMULATION OF THE HYDROLOGY OF SMALL WATERSHEDS. Tech. Rpt. 1, 130 pp. Water Resources Res. Center, Purdue University, Lafayette, Ind.

(36) JOHNSTONE, D., and CROSS, W. P.
1949. ELEMENTS OF APPLIED HYDROLOGY. 276 pp. New York.

(37) KALININ, G. P., and LEVIN, A. G.
1960. USE OF AN ELECTRONIC ANALOG COMPUTER IN THE FORECASTING OF RAIN FLOODS. Meterologia i. Gidrologia Zhuzurnal., 12: 14–18. Leningrad.

(38) KARTVELISHVILLI, N. A.
1967. TEORIYA VEROYATNOSTNYKH PROTSESSOV V GIDROLOGII I REGULITOVANII RECHNAGO STOKA [THEORY OF STOCHASTIC PROCESSES IN HYDROLOGY AND RIVER RUNOFF REGULATION]. Translated into English by Israel Program for Scientific Translation, 1969.

(39) KOHLER, M. A., and RICHARDS, M.
1962. MULTI-CAPACITY BASIN ACCOUNTING FOR PREDICTING RUNOFF FROM STORM PRECIPITATION. Jour. Geophys. Res. 67: 5187–5197.

(40) LINSLEY, R. K., and CRAWFORD, N. H.
1960. COMPUTATION OF A SYNTHETIC STREAM FLOW RECORD ON A DIGITAL COMPUTER. Internatl. Assoc. Sci. Hydrol. Pub. 51: 526–538.

(41) ——— FOSKETT, L. W., and KOHLER, M. A.
1948. ELECTRONIC DEVICE SPEEDS FLOOD-FORECASTING. Engin. News-Rec. 441(26): 64–66.

(42) ——— KOHLER, M. A., and PAULHUS, J. L. H.
1949. APPLIED HYDROLOGY. 689 pp., illus. New York.

(43) MAASS, A. A., and others.
1962. DESIGN OF WATER RESOURCE SYSTEMS. 620 pp. Cambridge, Mass.

(44) MATALAS, N. C., and REIHER, B. J.
1967. SOME COMMENTS ON THE USE OF FACTOR ANALYSES. Water Resources Res. 3(1): 213–223.

(45) NEGEV, M.
1967. MODEL OF SEDIMENT YIELD OF A CATCHMENT. Dept. Civ. Engin. Tech. Rept. 76. Stanford University, Calif.

(46) OTABA, K., SHIPATANI, K., and KIWATA, H.
1965. FLOOD SIMULATOR FOR THE RIVER KITAKAMI. Simulation 4(2): 86–98.

(47) PAYNTER, H. M.
1952. METHODS AND RESULTS FROM THE MIT STUDIES IN UNSTEADY FLOW. Boston Soc. Civ. Engin. Jour. 39(2): 120–165.

(48) ——— ed.
1955. A PALIMPSEST ON THE ELECTRONIC ANALOG ART. 270 pp. Boston.

(49) PENMAN, H. L.
1948. NATURAL EVAPORATION FROM OPEN WATER, BARE SOIL, AND GRASS. Roy. Soc. London Proc. Ser. A 193: 120–145.

(50) RICHARDS, M., and STRAHL, J. A.
1967. ELEMENTS OF RIVER FORECASTING. Weather Bur. Tech. Memo., WBTM HYDRO-4. Washington.

(51) RILEY, J. P., CHADWICH, D. G., and Bagley, J. M.
1966. APPLICATION OF ELECTRONIC ANALOG COMPUTER TO SOLUTION OF HYDROLOGIC AND RIVER BASIN PLANNING: UTAH SIMULATION MODEL II. 129 pp. Utah Water Resources Laboratory, Utah State University, Logan.

(52) ROSENBROCK, H. H.
1960. AN AUTOMATIC METHOD FOR FINDING THE GREATEST OR LEAST VALUE OF A FUNCTION. Computer Jour. 3(3): 175–184.

(53) SCHULZE, F. E.
1966. RAINFALL AND RAINFALL EXCESS. PART III. RECENT TRENDS IN HYDROGRAPH SYNTHESIS. TNO Proc. and Inform. Note 13: 9–30. The Hague.

(54) SHARP, A. L., GIBBS, A. E., OWEN, W. J., and HARRIS, B.
1960. APPLICATION OF MULTIPLE REGRESSION APPROACH IN EVALUATING PARAMETERS AFFECTING WATER YIELDS OF RIVER BASINS. Jour. Geophys. Res. 64: 1273–1286.

(55) SHEN, J.
1956. USE OF ANALOG MODELS FOR THE ANALYSIS OF FLOOD RUNOFF. U.S. Geol. Survey Prof. Paper 506-A, 24 pp.

(56) SKIBITZKE, H. E.
1963. THE USE OF ANALOG COMPUTERS FOR STUDIES IN GROUNDWATER HYDROLOGY. Inst. Water Engin. Jour. 17(3): 216–230. London.

(57) SNYDER, W. M.
1956. SOME LINEAR MODELS FOR MULTIPLE REGRESSION ANALYSIS IN HYDROLOGY. Tenn. Val. Auth. Hydrol. Data Branch. Knoxville.

(58) ———
1962. SOME POSSIBILITIES FOR MULTIVARIATE ANALYSIS IN HYDROLOGIC STUDIES. Jour. Geophys. Res. 67(2): 721–729.

(59) ——— and STALL, J. B.
1965. MEN, MODELS, METHODS AND MACHINES IN HYDROLOGIC ANALYSIS. Amer. Soc. Civ. Engin., Jour. Hydraulics Div. 91(HY4): 85–99.

(60) SUGAWARA, M.
1961. ON THE ANALYSIS OF RUNOFF STRUCTURES ABOUT SEVERAL JAPANESE RIVERS. Jap. Jour. Geophys. 2(4): 1–76.

(61) TENNESSEE VALLEY AUTHORITY.
1963. A WATER YIELD MODEL FOR ANALYSIS OF MONTHLY RUNOFF DATA. Tributary Area Devlpmt. Res. Paper 2, 78 pp. Knoxville, Tenn.

(62) ———
1964. BRADSHAW CREEK-ELK RIVER. A PILOT STUDY IN AREA-STREAM FACTOR CORRELATION. Tributary Area Devlpmt. Res. Paper 4. Knoxville, Tenn.

(63) WILDE, D. J.
1964. OPTIMUM SEEKING METHODS. 202 pp. Englewood Cliffs, N.J.

(64) ——— and BEIGHTLER, C. S.
1967. FOUNDATIONS OF OPTIMISATION. 480 pp. Englewood Cliffs, N.J.

(65) WILLIAMS, E. J.
1959. REGRESSION ANALYSIS. 214 pp. New York.

(66) WONG, S. T.
1963. A MULTIVARIATE STATISTICAL MODEL FOR PREDICTING MEAN ANNUAL FLOOD IN NEW ENGLAND. Assoc. Amer. Geog. Ann. 53: 298–311.

(67) WOO, D. C., BOERSMA, L., and STONE, L. N.
1966. DYNAMIC SIMULATION MODEL OF THE TRANSPIRATION PROCESS. Water Resources Res. 2(1): 85–97.

(68) ——— STONE, L. N., and BOERSMA, L.
1966. A CONCEPTUAL MODEL OF STOMATA CONTROL MECHANISMS. Water Resources Res. 2(1): 71–84.

(69) YEVDJEVICH, V. M.
1964. REGRESSION AND CORRELATION ANALYSIS. Section 8, Part II: 24 pp. *In* Chow, Ven Te, ed., Handbook of Applied Hydrology. New York.

LECTURE 8: SYNTHETIC UNIT HYDROGRAPHS

Lecture 8 is largely devoted to a discussion of synthetic unit hydrographs as developed in classical hydrology, and then as modified with the emergence of the systems approach. The lecture is intended to serve the same purpose for *simulation* as lecture 4 on "Classical Methods of Runoff Prediction" was intended to serve for *analysis*.

In both classical hydrology and parametric hydrology, simulation techniques were first developed for surface water hydrology. Thus, in this lecture we will be primarily concerned with the direct storm runoff and its relationship to precipitation excess. The problem of synthesis is to devise a system which will operate on an input, $x(t)$, to reproduce the required output, $y(t)$, to a given degree of accuracy. The dream of the applied hydrologist is to be able to forecast direct storm runoff from a catchment map; this means being able to predict the unit hydrograph from a contoured map (preferably with information on soil types) where no records are available for the derivation of a unit hydrograph.

Types of Synthetic Unit Hydrographs

The standard synthetic procedure has been to derive a series of unit hydrographs in some systematic fashion for watersheds with adequate records and then to correlate these unit hydrographs in some way with the watershed characteristics. These correlations are then used to predict the scale and shape of the unit hydrograph for some watershed whose characteristics are known but for which no records of outflow are available.

In classical hydrology, synthetic unit hydrographs developed along two main lines, both of which converged at the time of the emergence of parametric hydrology. These two lines of development are shown in figure 8–1. The methods at the left-hand side made the general assumption that each catchment had a unique unit hydrograph, and those at the right-hand side made the general assumption that all unit hydrographs might be represented by a single curve, or a family of curves, or a single equation.

The first line of development (*16, 44, 45*) derived from the rational method. (See lecture 4, pp. 75–101). About the year 1920 (*54*), the rational method was modified to include the effect of nonuniform rainfall distribution by the use and time-area curve or the time-area-concentration curve. This modification was, in effect, an attempt to synthesize the response of the watershed on the basis of the characteristics which could be read from a map. By using a contoured map and the Manning formula, it was possible to construct the time-area-concentration curve or the time-area-curve. This was assumed to be

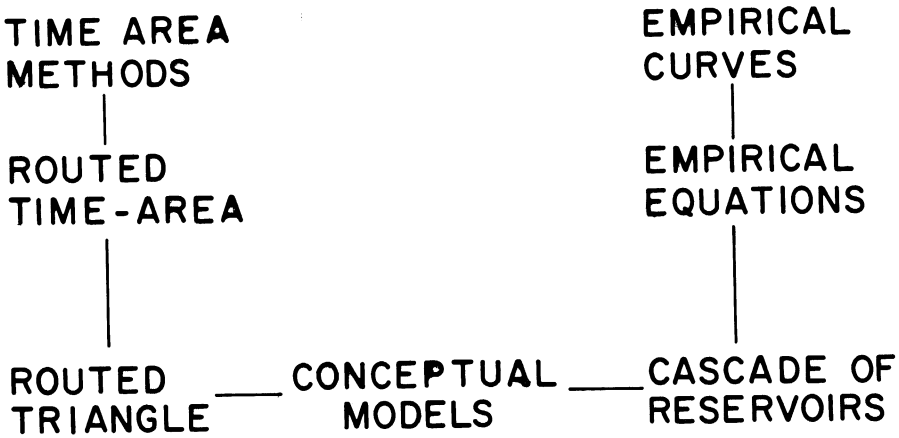

FIGURE 8–1.—Type of synthetic unit hydrograph.

the instantaneous unit hydrograph (IUH) (or the S-hydrograph) for the watershed involved, though the unit hydrograph method was not to be developed for another 10 years. Since, in each case, the time-area-concentration curve was built up from the information available for the particular catchment, each unit hydrograph was unique. In the 1930's, Zoch (*71*)—and afterwards Turner and Bourdoin (*65*) and Clark (*9*)—assumed that the response of the watershed would be given by routing the time-area-concentration curve through an element of linear storage. In this case also, each unit hydrograph would be unique, but the variation between them would be reduced and differences in watershed characteristics smoothed out to a greater or lesser extent depending on the degree of damping introduced by the storage routing.

On the other hand, the second line of development tended to ignore variations in watershed characteristics and in the unit hydrographs. Thus, we find in the hydrologic literature a number of curves which are presented as giving the unique shape of the unit hydrograph. One, by Commons (*12*) was published in 1942. Unique representations of unit hydrograph shape were also put forward by Williams (*69*), the SCS (*68*), and others. These assumed, in effect, that there is one shape for the unit hydrograph, though in most cases the scale is still left free and the specified shape is given in terms of dimensionless discharges (for example, q/q_{max}) and dimensionless time (for example, t/t_{peak}). Since the volume of the unit hydrograph is conventionally taken as unity, there is only one parameter to be fixed to determine the unit hydrograph. All that is required in this empirical curve approach is to know the time-to-peak, or the peak rate of discharge, and then to use the standard shape of unit hydrograph to determine the unit hydrograph for the watershed. This is in

distinct contrast to the time-area curve method where all the watershed information must be used.

As further studies were made of synthetic unit hydrographs, it was realized that a one-parameter method was not sufficiently flexible and that two-parameter methods were required for adequate representation. These would require the use of a family of curves from which the unit hydrograph could be taken. Since it is easier to represent a two-parameter model by an equation rather than a family of curves, the natural development of this approach was towards the suggestion of empirical equations which would represent all unit hydrographs. It is remarkable that people working in many different countries all turned towards the same empirical equation for the representation of the unit hydrograph. The independence of this development is proved by the fact that they expressed this single equation in different forms. The equation in question was the two-parameter gamma distribution or Pearson type III empirical distribution.

About 15 years ago, these apparently quite separate lines of development started to approach one another. O'Kelly, Nash, and Farrell working in the Irish Office of Public Works found that there was no essential loss in accuracy if the routed time-area-concentration curve was replaced by a routed isosceles triangle (*49*). In their early work, this group had followed the approach of Clark (*9*) and laboriously developed a time-area-concentration curve for each catchment and then routed through a linear storage in order to obtain the IUH. If the individual time-area-concentration curves for natural watersheds could be replaced by isosceles triangles without serious distortion of the resulting unit hydrograph, this was an indication that the smoothing of the linear reservoir was such that the individual variations in catchment characteristics were removed by routing. Thus, the line development which started out by treating every unit hydrograph as unique had been modified so as to represent each unit hydrograph by a two-parameter system, one-parameter being needed to fix the base of the triangle (T) and the other the storage delay time (K) of the linear reservoir. A somewhat similar approach was adopted by the SCS though, in this case, the triangle was nonisosceles. In our modern terminology, find the unit hydrograph by routing a triangular inflow through a linear reservoir represents using a conceptual model for the IUH.

While this development was taking place among exponents of the routed time-area curve approach, there was a similar development among those who followed the tradition based on empirical curves and empirical equations. About 10 or 15 years ago, Japanese hydrologists (*56*, *61*, *62*) attempted to simulate the response of rivers by models consisting of one or two linear storage elements. Following this line, Nash (*46*) suggested the two-parameter gamma distribution as having the general shape required for the IUH and pointed out that the gamma distribution could be considered as the impulse response for a cascade of equal linear reservoirs. He suggested that the number of reservoirs

could be taken as nonintegral if necessary. In this way, the second tradition also arrived at a conceptual model but in this case, a different one. The routed triangle had two parameters and generated a family of curves with a particular shape due to the nature of the model. Similarly, the cascade model had two parameters—the number of reservoirs n and the storage delay time of each K—and generated a family of shapes specific to this model.

In 1959, Dooge attempted to develop a general representation of the unit hydrograph based on the Muskingum method of routing. When this did not prove satisfactory, the assumption was made that the translation and storage elements in the watersheds could be separated and the action of the watershed represented by linear distortionless channels and linear storage elements or reservoirs (*17*). This represented a more general type of conceptual model than the routed triangle or the cascade of reservoirs and, in fact, included the two of them as special cases.

Once this stage had been reached, the way was open for attempts to represent the unit hydrograph by all types of conceptual models. It may be dangerous to think of these conceptual models as anything more than an attempt to simulate the watershed. Dooge (*17*) was quite convinced that the linear storage elements which were part of the proposed general model had a real physical meaning. Now he is by no means so sure. It may be that a breakthrough in understanding the morphology of watersheds would in the future, allow a close link to be established between the nature of the prototype and the structure of the optimum simulating system. Meanwhile, it is safer to think of these models merely as attempts to simulate and to judge them by their performance in doing so.

Time-Area Methods

It is instructive to review the subject of synthetic unit hydrographs from its origins in the time-area versions of the rational method which were in use even before the unit hydrograph method was discovered. In this way, we can compare the approaches of the modified rational method, classical empirical unit hydrograph methods, and modern methods of parametric hydrology to the same problem and to the various elements of that problem. With the hindsight afforded to us by our knowledge of unit hydrograph methods and of the newer methods of parametric hydrology, we can recognize the earlier methods used as special cases of the later approach.

As mentioned in lecture 4, pages 79–84, the original rational method was intended for predicting the maximum discharge from a catchment and was not concerned with the prediction of the whole hydrograph (*7, 34, 40, 43*). Later developments of the method allowed for variations in rainfall intensity during the design storm and, in doing so, enabled a full hydrograph of runoff to be developed if required (*11, 24, 26, 28, 30, 50, 54, 55*). Other developments allowed determination of the question of whether a storm centered over part

of the area might not give a greater peak runoff than one spread over the whole of the catchment area (*21, 44, 52, 53*). These variations of the rational method are summarized as follows:

Type	*Rainfall Assumption*		*Authors*
	Area	*Intensity*	
Classical rational method.....	full	uniform	Mulvany (1850) Kuichling (1889) Chamier (1897) Lloyd-Davies (1906)
Time-area.....	full	hypothetical	Ross (1921) Rousculp (1927) Ormsby (1932) Hart (1932)
		critical	Hawken (1921) Judson (1932)
		typical	Coleman & Johnson (1931) Laurenson (1932) Jens (1948)
'Tangent' methods.....	partial	uniform	Reid (1926) Riley (1931) Escritt (1950) Munro (1956)

In 1921, Ross (*54*) suggested that a hypothetical storm be derived from the curve of rainfall intensity versus duration and then used in conjunction with the time-area-concentration diagram to predict the maximum rate of runoff and, if need be, the whole hydrograph. In an appendix to Ross' paper, Hawken (*24*) suggested introducing a factor of safety by shuffling the unit periods of rainfall into a critical pattern of storm, that is, one in which the most intense rainfall would be centered over the maximum ordinate of the time-area-concentration curve, the second most intense rainfall over the second highest ordinate of the curve, and so on. While the methods proposed by Ross and Hawken can give safe values for design, they would, of their nature, tend to overestimate the peak rate of runoff. In 1931, Coleman and Johnson (*11*) suggested that the pattern of the storm rainfall be based on typical storms for the area under investigation.

Under certain conditions (which arise mostly in urban catchments) the runoff estimated by the rational method for part of the area may exceed the runoff estimated by the same method for the whole area. Special techniques were developed where the rainfall intensity-duration relationship was assumed to be of the form:

$$i=\frac{a}{b+ct} \tag{1}$$

where i is the average rainfall intensity; t the duration of rainfall; and a, b, and c are empirical coefficients. In such cases, the partial area giving the greatest estimated runoff can be determined by drawing a tangent to the time-area curve, thus giving rise to the name "tangent method" for such techniques. Where the rainfall formula is of exponential form:

$$i = \frac{a}{t^b} \tag{2}$$

the critical partial area may be found by the use of a series of overlay curves (*21*, *44*). The critical area may also be found by locating the intersection of the two curves given by the time-area-curve (scaled up by a factor of b) and the product of the time-area-concentration curve and the time elapsed. These time-area methods were widely applied in urban hydrology and, to a lesser extent, in the hydrology of agricultural watersheds.

The time-area variations of the rational method (known in the Russian literature as genetic or isochrone methods) were actually crude methods for developing synthetic unit hydrographs. The hypothetical or typical storm was plotted to the same scale as the time-area-concentration curve, but in one case the time scale was plotted in a reverse direction. The two curves were then superimposed, and the products of corresponding ordinates taken and summed together to obtain the runoff at any given time. The runoff for any particular time was obtained by superimposing the zero point of the reversed rainfall-intensity curve on the point of the abscissa of the time-area-concentration curve corresponding to the required time. By shifting the two curves relative to one another, enough points could be determined to give a representation of the whole hydrograph of runoff for the pattern of rainfall intensity used. This, in effect, was a graphical method of carrying out the mathematical process of convolution. The time-area-concentration curve in such methods has the same function as the IUH in unit hydrograph procedures. Thus, the time-area-concentration curve, however found, was in fact a synthetic unit hydrograph.

If the time-area-concentration curve was based merely on an estimate of the time of translation over the ground and in channels, then the results obtained tended to overestimate the peak rate of discharge from the watershed. This was only to be expected since the effects of surface storage, soil storage, and channel storage are all ignored, and the time-area-concentration curve was based purely on translation. In practice, design engineers soon developed ways of avoiding the tedium of constructing a time-area-concentration curve for each separate watershed. Where they were interested only in the peak rate of runoff, they developed empirical formulas for the time of concentration (t_c) and for the coefficient of runoff (C) in the equation:

$$Q = C \cdot i(t_c) \cdot A \tag{3}$$

where Q is the peak discharge, A is the area of the catchment, and i is the rainfall intensity for a duration equal to the time of concentration, t_c, and for the particular frequency of recurrence chosen for the design. Others derived the time-area-concentration curve but, realizing that their values of runoff were too high, used empirical values for the time of concentration to correct the time scale of the time-area-concentration curve. This was possible because the time of concentration is equal to the base length of the time-area-concentration curve, that is, the IUH.

In urban design, rules of thumb for estimating the time of concentration were used. The time of concentration was usually taken by calculating the time of travel in the sewer and adding to it an inlet time, which usually is within the range from 5 to 30 minutes. In such urban catchments, the coefficient C in equation 3 depended largely on the amount of impervious area in the catchment and was also affected by any storage in the system. A typical empirical formula for the value of C was one which related the coefficient of runoff (C) to the number of houses per acre (N) in the following way (*21*):

$$C=\sqrt{N}/10 \tag{4}$$

The range of coefficients normally used for different types of urban areas can be found in standard reference books such as the American Society of Civil Engineers "Manual on the Design and Construction of Sanitary and Storm Sewers" (*1*). More sophisticated methods have been developed in recent years for the design of storm water sewers, but the discussion of them is outside the scope of this lecture.

For agricultural catchments, a commonly used formula for the time of concentration is that of Kirpich (*31*):

$$t_c=0.0078\left(\frac{L}{S}\right)^{0.77} \tag{5}$$

where t_c is the time of concentration in minutes, L the length of flow in feet, and S is the ground slope. The coefficient of runoff C may be related to a number of factors by:

$$C=1.00-(C_T+C_S+C_c) \tag{6}$$

where C_T varies inversely with the slope and has values between 0.1 and 0.3; C_S varies between 0.1 for a tight clay and 0.4 for sandy loam; and C_c varies with the vegetal cover between 0.1 for cultivated land and 0.2 for woodlands. These remarks on the rational formula are made not as an encouragement to its use but as a background against which to judge the further development of synthetic unit hydrograph methods.

As indicated on figure 8–1, the time-area methods were, for unit hydrograph purposes, replaced by a method in which the time-area-concentration curve was routed through a linear reservoir. Zoch (*71*) put forward a general physi-

cal theory of streamflow based on the assumption that, at any time, the rate of discharge was proportional to the amount of rainfall remaining within the soil at that time. He analyzed runoff due to a uniform rainfall of finite duration and obtained the equations for four separate segments of the hydrograph. Zoch solved these equations for two simple cases—a rectangular time-area-concentration curve and a triangular time-area-concentration curve. He pointed out that the extension to the general case would involve the integration of a function of the type:

$$\phi(x) = w(x) \cdot \exp(Kx) \tag{7}$$

where $w(x)$ represents the time-area-concentration curve and K is a constant. He suggested the use of series approximation or numerical integration.

Horton (*27*) introduced the idea of the virtual channel inflow graph. This was an attempt to derive from the outflow hydrograph a simple form of inflow hydrograph which when routed through a linear reservoir would give the outflow graph. The start of the channel inflow was taken at the same time as the start of channel outflow and the end of channel inflow at the time corresponding to the point of contraflexure on the recession limb of the outflow hydrograph. This, in fact, represented the estimation of the time of concentration from the outflow hydrograph. Because of the further assumption of routing through a single storage element, the recession limb of the virtual channel inflow graph had to pass through the peak of the outflow graph. The only remaining condition was that the volume under the inflow and outflow hydrographs should be the same.

Clark (*9*) suggested that the unit hydrograph for instantaneous rainfall could be derived by routing the time-area-concentration curve through a single element of linear storage. Physically, this is equivalent to Zoch's formulation, but the equations are simplified by reducing the rainfall duration to zero and replacing the numerical integration of the term in equation (*9*) with the reservoir routing procedure. The Zoch-Clark method clearly represented an advance over the time-area or isochrone methods, which ignored storage effects and only took account of variations in the time of translation to the outlet. The allowance for storage throughout the catchment by a single reservoir at the outlet seems a highly simplifying assumption but, nevertheless, a step in the right direction.

As mentioned earlier in this lecture, O'Kelly and his coworkers (*49*) replaced the time-area-concentration curve by an isosceles triangle and thus produced the IUH by routing an isosceles triangle through a linear reservoir. This was, in effect, a combination of the Zoch-Clark approach with Horton's virtual channel inflow graph.

The methods of Zoch, Clark, and O'Kelly only became synthetic unit hydrograph methods in the real sense of the term when empirical relationships between some of the parameters of the process and the catchment characteris-

tics were derived. An empirical relationship is required which correlates the base of the time-area-concentration diagram (that is, the time of concentration) to catchment characteristics. Except in the case of O'Kelly's method, some method is required for estimating the shape of the time-area-concentration diagram itself once the base length has been determined. Finally, a method of estimating the storage factor (k) must be prescribed. In the case of a gaged catchment, the value of the storage constant K can be estimated from the recession of the hydrograph. In the absence of records of storm runoff the latter method cannot be used.

Johnstone (*29*) using the Clark method derived relationships based on 19 catchments with areas between 25 and 1,624 sq. mi. in the Scotie and Sandusky River basins. Johnstone proposed the following relationship for the base of the time-area-concentration curve:

$$t_c = \frac{4.7}{r^2}\left(\frac{L}{S}\right)^{0.5} \tag{8a}$$

where t_c is the base of the time-area-concentration curve (that is, the time of concentration) in hours, L is the length of the principal stream in the catchment in miles, S is the average slope of the main stream in feet per mile, and r is a branching factor based on the stream pattern. Johnstone found that there was little loss of accuracy in neglecting the branching factor and writing,

$$t_c = 5.0\left(\frac{L}{\sqrt{S}}\right)^{0.5} \tag{8b}$$

where the terms have the same meaning as in equation 8a. Johnstone also derived an empirical expression for the storage delay time (K) which is the ratio of storage to outflow for the linear reservoir through which the time-area-concentration curve is routed. On the basis of the catchments studied by him, he proposed the following empirical relationship for the storage delay time K:

$$K = 1.5 + 90\frac{A}{LR} \tag{8c}$$

where A is the area of the catchment in square miles, L is the length of the main stream in miles, and R is an overland slope factor in feet per mile estimated by placing a square grid over the contour map and counting the number of intersections of contour lines and grid lines.

Eaton (*19*) did a similar correlation study for seven Tasmanian rivers with catchment areas varying from 48 to 322 sq. mi. He estimated the base lengths of the time-area-concentration diagram to be given by:

$$t_c = 1.35\left(\frac{AL}{r}\right)^{0.37} \tag{9a}$$

where t_c is the base of the time-area-concentration curve in hours, A is the

catchment area in square miles, L is the length of the main channel in miles, and r is a branching factor varying between 1.0 and 2.0. Eaton's use of a branching factor rather than a slope factor can be explained by the lack of contour maps for the region studied. He found that for five of the seven basins the storage constant K was adequately defined by:

$$K = 1.2\left(\frac{A^2}{L^2 r}\right)^{1/3} \tag{9b}$$

where K is the storage delay time in hours and the catchment factors are defined for equation 9a.

O'Kelly (*49*) presented results for 10 catchments in Ireland ranging in area from 56 to 366 sq. mi. In his paper, the results are reduced to a standard catchment area of 100 sq. mi. by assuming a hydrologic time-scale factor based on one-fourth root of the area and then expressed graphically as a function of the overland slope.

In a discussion of O'Kelly's paper, Dooge (*15*) indicated that a logical extension of the idea of a model catchment (based on Froude similarity) would be to express the base of the isosceles triangle (T) as:

$$T = a\frac{A^{1/4}}{S^{1/2}} \tag{10a}$$

where T is the base length of the inflow triangle in hours, A is the catchment area in square miles, S is the slope in parts per 10,000, and a is an empirical constant. For the values of T derived by O'Kelly (*49*), the parameter (a) varied from 10 at a slope of 10 in 10,000 to 14 at a slope of 500 in 10,000. On a similar basis the values of K could be expressed as:

$$K = b\frac{A^{1/4}}{S^{1/2}} \tag{10b}$$

where K is the storage delay time of the linear reservoir in hours, b is an empirical constant, and the other factors are as for equation 10a. For the values of K derived by O'Kelly, b could be taken in equation 10b as varying from 13 for a slope of 10 in 10,000 to 10 for a slope of 500 in 10,000. Dooge[1] also derived the relationship:

$$T = 2.58\frac{A^{0.41}}{S^{0.17}} \tag{11a}$$

based on a least squares analysis of O'Kelly's data and his estimated values

[1] DOOGE, J. C. I. SYNTHETIC UNIT HYDROGRAPHS BASED ON TRIANGULAR INFLOW. M.S. Thesis, Iowa State Univ., Ames. 1956.

of T. In equation 11a, A is the catchment in square miles and S is the overland slope in parts per 10,000. A least squares analysis of the values of K derived by O'Kelly gives:

$$K = 100.5 \frac{A^{0.23}}{S^{0.70}} \tag{11b}$$

where K is the storage delay time in hours, A is the area in square miles, and S is the slope in parts per 10,000.

Empirical Expressions for Unit Hydrograph Parameters

We now turn to a review of the empirical line of development of synthetic unit hydrographs based on the representation of all unit hydrographs by a single curve or a family of curves. The procedures based on this approach follow a standard pattern in nearly all cases. A number of unit hydrograph parameters are chosen as the basis for defining the unit hydrograph.

At the same time, a number of catchment characteristics are chosen which are thought to have the strongest influence on the shape of the unit hydrograph. For a number of catchments with adequate records of rainfall and runoff, unit hydrographs are derived and the values of the unit hydrograph parameters determined. These are then correlated with the chosen catchment characteristics. This correlation can then be applied to the catchment characteristics of a catchment without adequate runoff records in order to estimate the parameters of the unit hydrograph for such a catchment. The latter parameters are then used to derive the full unit hydrograph by using a standard shape of unit hydrograph or by using additional relationships between the basic unit hydrograph parameters and other features of the unit hydrograph.

In the time-area methods reviewed in the last section, we discussed first the shape of the unit hydrograph (that is, the time-area-concentration curve routed through a single linear reservoir) and after this the empirical relationships by means of which the catchment characteristics could be used to estimate the two parameters required, that is, the base of the time-area-concentration curve (t_c) and the storage constant characterizing the linear reservoir (K). In dealing with the second line of development, the order of discussion will be reversed. In the present section, we will discuss the empirical relationships between the unit hydrograph parameters and the catchment characteristics, leaving until the next section the question of the shape of the empirical synthetic unit hydrograph. In this review of empirical methods, attention will be concentrated on the main lines of approach, which will be illustrated by examples. No attempt will be made to list all methods or all features of the methods mentioned. Those interested in the latter can read

details of procedures in the original papers that are referenced at the end of this lecture.

As mentioned above, the first two steps are the choice of unit hydrograph parameters and catchment characteristics. Three types of unit hydrograph parameters are used—time parameters, peak discharge parameters, and recession parameters. There are a large number of time parameters used in unit hydrograph studies, the most important of which are shown on figure 8–2. In this illustration, D is used to denote the duration of precipitation excess, which is assumed to occur at a uniform intensity over this unit period. Common time parameters used to characterize the outflow hydrograph are: the time of rise (t_r), that is, the time from the beginning of runoff to the time of peak discharge; the time of virtual inflow (T), that is, from the beginning of runoff to the point of contraflexure on the recession limb of the outflow hydrograph; and the total runoff time or base length of the unit hydrograph (B). The common time parameters used to connect the precipitation excess and the hydrograph of direct runoff are: the lag time (t_L), that is, the time from the center of mass of precipitation excess to the center of mass of direct runoff; the lag to peak time (t_p), that is, the time from the center of mass of effective rainfall to the peak of the hydrograph; and the time to peak (t_p'), that is, the interval between the start of rain and the peak of the outflow hydrograph.

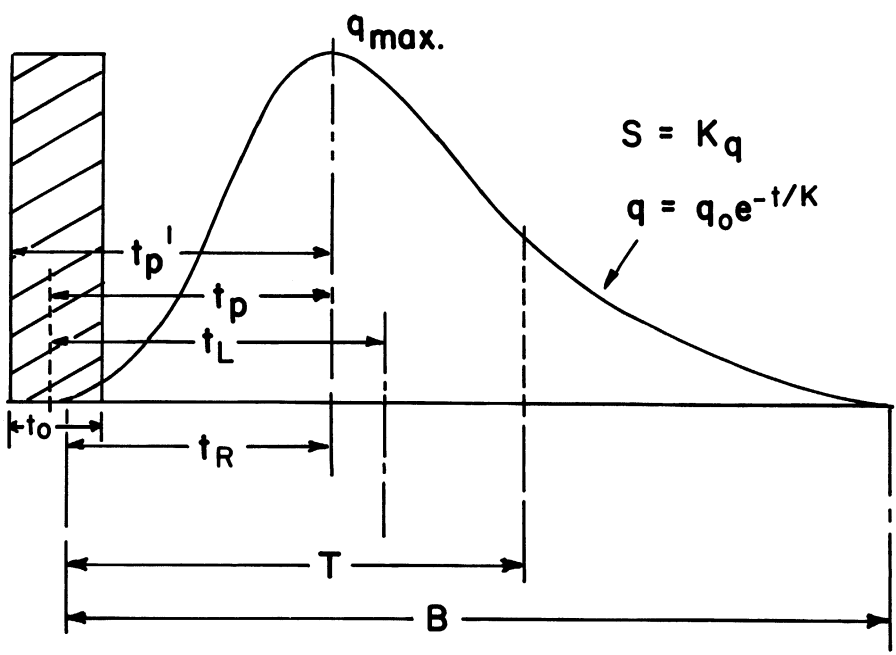

FIGURE 8–2.—Unit hydrograph parameters.

One of the most important factors in surface water hydrology is the delay imposed on the precipitation excess by the action of the catchment. If the parameter representing this delay is to be useful for correlation studies, it should, if possible, be independent of the intensity and duration of rainfall. In the case of a linear system—and unit hydrograph theory assumes that the system under study is linear—the time parameters are independent of the intensity of precipitation excess, but only the lag time (t_L) has the property of being independent of both the intensity and the duration. Accordingly, with the hindsight given by the systems approach, we can say that only the lag time should be used as a duration parameter in unit hydrograph studies.

In regard to discharge parameters, the peak discharge (q_{max}) is almost invariably used when such a parameter is required. Another parameter, which can be estimated for a derived unit hydrograph, is the time parameter K, which characterizes the recession of the unit hydrograph when this recession is of declining exponential form. In such cases, the unit hydrograph may be considered as having been routed through a linear reservoir whose storage delay time is K. If the recession can be represented in this form, a logarithm of the discharge plotted against time will give a straight line, and the value of K can be estimated from the slope of this line. Alternatively, the value of K may be determined at any point on the recession curve by dividing the remaining outflow after that point by the ordinate of outflow at the point. Other parameters used to characterize unit hydrographs are the values of W-50 and W-75, which are the width of the unit hydrograph for ordinates at 50 percent and 75 percent of the peak, respectively.

Nash (*46*, *47*, *48*) suggested the use of the statistical moments of the IUH as the determining parameters of the unit hydrograph. The first moment U_1' is equal to the lag of the IUH t_L. For higher moments, Nash suggested the use of the dimensionless moment factors obtained by dividing the moment of any order about the center of area by the first moment raised to a power corresponding to the order of the moments. Nash showed that the moments of the unit hydrograph could be derived from the moments of the precipitation excess and the moments of the direct runoff without the necessity of deriving the unit hydrograph itself.

The second stage in the standard procedure is the choice of catchment characteristics. As might be expected, all procedures involve a scale factor, but a variety of scale factors is used. The simplest scale factor is to use the area of the catchment itself (A). Others commonly used are the length of the main channel or length of highest order stream (L); the length to the center of area of the catchment (L_{ca}); or for small catchments, the length of overland flow (L_0). Where only one catchment characteristic is used (in a one-parameter model), the catchment characteristic used is always a length or area parameter.

A review of synthetic unit hydrograph procedures reveals slope as the second most frequently used catchment characteristic and, therefore, if the

applied hydrologists have chosen wisely, the second most important catchment characteristic. Since slope varies throughout a watershed, a standard definition of some representative slope is required. The slope parameters most often used are the average slope of the main channel or some average slope of the ground surface. The measurement of average slope parameters usually involves tedious computations (*10, 60*).

Although area or stream length and channel slope or ground slope have been used almost universally, there is no agreement about the remaining parameters. The shape of the catchment must have some effect, but there is such a variety of shape factors to choose from—form factors, circularity ratios, elongation ratios, leminiscate ratios, and others—that the lack of uniformity is not surprising. Another factor which must affect the hydrograph is the stream pattern. This may be represented by drainage density or stream frequency or some such parameter.

Although parameters representing mean characteristics must have a primary influence, the variations in certain characteristics from part to part of the watershed will give rise to secondary parameters, which may not be negligible. Thus, having taken area and slope into account, the third most important parameter may well be variation of length or of slope rather than shape or drainage density. The choice of catchment characteristics for correlation with unit hydrograph parameters will remain a subjective matter until we have a deeper knowledge of the morphology of natural catchments. The latter is a vital subject for modern hydrology. If we neglect the study of geomorphological processes to concentrate on mathematical manipulations which have no physical foundations, then the whole progress of hydrology may be impeded.

Having decided on the unit hydrograph parameters and the catchment characteristics, it is necessary to correlate the two. In most methods used in classical hydrology, the correlation has been one of linear regression. It may be that the use of factor analysis would reveal significant groupings of catchment characteristics. If the same or similar groupings appeared in a number of different regional studies, the catchment parameter thus indicated could be tentatively assumed to have general validity and could be used consistently in a variety of studies. The use of such general parameters might disimprove slightly the degree of correlation between unit hydrograph parameters and catchments characteristics for each individual study, but it would make the various studies comparable with one another and point the way towards general laws of catchment behavior. It is uncertain, of course, whether the extra insight gained would be worth the extra work involved in following this particular line.

In the same year in which he published his classical paper on the unit hydrograph (*57*), Sherman published another paper (*58*) in which he proposed that for a catchment without records a unit hydrograph be transposed from a catchment of similar characteristics but with all the time factors adjusted in

proportion to the square root of the ratio of the two areas. In the following years, a large variety of synthetic models were suggested which involved correlations between catchment characteristics on the one hand and the unit hydrograph parameters (or in some cases selected ordinates of the unit hydrograph) on the other.

The most important of these were those proposed by Bernard (*4*), McCarthy,[2] Snyder (*59*), Morgan and Hullinghorst,[3] Mitchell (*41*), Taylor and Schwartz (*63*), the Bureau of Reclamation (*66*), and the Corps of Engineers (*67*). Probably the most widely used method for synthetic unit hydrographs is that proposed by Snyder, which has since been adapted by many workers for their own needs. This method will be discussed briefly below and comparative details of the other methods can be read in the references indicated above, details of which are given at the end of this lecture.

Snyder's work (*59*) was based on data from 20 catchments in the Appalachians. He took as the basic unit hydrograph parameter the lag time to peak (t_p) defined as the interval in hours between the center of rainfall excess and the peak of the unit hydrograph and took as the basic catchment characteristic the product of the length of the main channel in miles (L) and the length from the outlet to the center of area of the catchment in miles (L_{ca}). He suggested that the unit hydrograph parameter and the catchment parameter could be connected by:

$$t_p = C_t (L L_{ca})^{0.3} \tag{12a}$$

Having determined the time to peak of the unit hydrograph, Snyder assumed that the recession from peak to zero flow took 3 days. He derived the base length of the unit hydrograph from the formula:

$$B = 3\left(1 + \frac{t_p}{24}\right) \tag{12b}$$

where B is the base length in days and t_p the time lag to peak in hours. Snyder related the peak of his unit hydrograph to the lag to peak already determined by the relation:

$$q_{\max} = 640 \cdot \frac{C_p}{t_p} \tag{12c}$$

where $q_{\max}$ is the unit hydrograph peak in cubic feet per second per square

---

[2] McCarthy, G. T. THE UNIT HYDROGRAPH AND FLOOD ROUTING. U.S. Corps of Engineers Office, Providence, R.I. 1939.

[3] Morgan, R., and Hullinghorst, D. W. UNIT HYDROGRAPHS FOR GAUGED AND UNGAUGED WATERSHEDS. U.S. Corps of Engineers Office, Binghampton, N.Y. 1939. (Unpublished manuscript.)

mile, t_p is the time to peak in hours, and C_p is a coefficient that takes account of the flood wave storage effected in the catchment.

For the catchments which he studied in the Appalachians, Snyder found C_t to vary between 1.8 and 2.2, and C_p to vary between 0.56 and 0.69. Snyder used a standard duration of rainfall (D) such that:

$$t_p = 5.5D \tag{12d}$$

and the peak of the unit hydrograph had to be adjusted for other rainfall durations. In his original paper, Snyder (*59*) published a diagram for deriving the 24-hour distribution graph, but this was not adopted by later workers who used his basic method.

A number of subsequent workers used Snyder's form of relationship between the lag time to peak and the catchment length parameters. Linsley (*39*) found the value C_t varied from 0.7 to 1.0 for catchments in the Sierra Nevada. The Corps of Engineers (*67*) found values of the same parameter varying from 0.4 in southern California to 8.0 for States bordering the Gulf of Mexico and recommended that the value C_t be determined in a given case from neighboring or similar catchments. The Corps of Engineers investigations indicated that the value of C_p could vary from 0.31 in the Gulf of Mexico States to 0.94 in southern California.

In general, the empirical methods for synthetic unit hydrographs tended to adopt a correlation equation of the general type:

$$t_L(\text{or } t_p \text{ or } t_p') = \frac{C(A)^a}{S^b} \text{ or } \frac{C(LL_{ca})^a}{S^b} \tag{13}$$

The values of the exponents and the coefficients varied as might be expected. For example, Mitchell (*41*) in his study of 58 Illinois streams found the lag rime in hours (t_L) could be related to the area in square miles (A) by:

$$t_L = 1.05(A)^{0.6} \tag{14}$$

and that the slope did not improve the correlation substantially. This result becomes understandable when we realize that, for the catchments studied by Mitchell, the coefficient of correlation between area and slope was of the order of 0.9.

Some of the synthetic unit hydrograph methods resemble Snyder's in that there is only one correlation with catchment characteristics. If a fixed shape of unit hydrograph is used, then the synthetic unit hydrograph method is a one-parameter method. If, however, a further degree of freedom is introduced by using a relationship between unit hydrograph parameters involving an adjustable coefficient, as in the case of equation 12c, then the method will become a two-parameter one. In other cases, such as the method proposed by Taylor and Schwartz (*64*), there are two independent correlations of unit

hydrograph parameters with catchment parameters and again in this case, we have a two-parameter method for deriving a synthetic unit hydrograph.

Empirical Shapes for the Unit Hydrograph

When unit hydrograph parameters have been determined, it is still necessary to derive the complete unit hydrograph. If the time-to-peak, the peak discharge, and the base length of the unit hydrograph are known, then we know three points on the unit hydrograph, and a curve can be sketched in by trial and error to pass through these three points and to have the requisite area. A number of authors have suggested particular shapes of dimensionless unit hydrographs or of S-curves which can be used to determine a complete unit hydrograph or S-curve, once a single parameter has been determined. Examples of such standard shapes are those described by Langbein (*35*), Commons (*12*), the Bureau of Reclamation (*66*), the SCS (*68*), Williams (*69*), and Bender and Roberson (*3*). Since a single curve is used to represent all unit hydrographs (or all unit hydrographs within a given region, or all unit hydrographs within a given range of watershed size), it is only necessary to determine one parameter from the catchment characteristics to fix the scale of the actual unit hydrograph.

If it is desired to introduce more flexibility into the empirical approach, it would be necessary to develop a family of curves to represent the shape of the unit hydrograph. In this case, it would be necessary to derive two unit hydrograph parameters from the catchment characteristics. However, if we wish to synthesize unit hydrographs with two parameters, that is, with two degrees of freedom, then it is more convenient to use an empirical equation rather than empirical curves to represent the synthetic unit hydrographs.

The first suggestion of an empirical equation to fit the unit hydrograph appears to have been made by Edson (*20*). He argued that the time area curve for a catchment would have the general parabolic form:

$$A(t) \propto t^a \tag{15}$$

and that the valley storage acts as a reservoir so that the discharge with time decreases exponentially:

$$Q(t) \propto e^{-bt} \tag{16}$$

Edson argued that both effects operate throughout the hydrograph and therefore that the combined effects could be written as:

$$Q(t) \propto t^a e^{-bt} \tag{17}$$

which can be normalized and written as:

$$Q(t) = C \cdot \frac{b(bt)^a e^{-bt}}{\Gamma(a+1)} \tag{18}$$

where Q is the discharge per unit area, t is the time, C is a constant depending on both the volume of inflow and the units used, and a and b are the parameters determining the shape of the unit hydrograph. The reasoning used by Edson (*20*) to arrive at equation 18 is faulty, because he uses ordinary multiplication instead of convolution to represent the effect of storage on the time-area curve. Nevertheless, he arrived at a form of the IUH.

Some years later, Japanese workers in hydrology (*56*, *61*, *62*) based the form of the IUH on a conceptual model consisting of linear reservoirs and used as its equation:

$$h_0(t) = (a_0 + a_1 t + a_2 t^2) \exp(-\lambda t) \tag{19}$$

Following this Nash (*46*) suggested the model of a cascade of equal linear reservoirs which gave the equation of the unit hydrograph as:

$$h_0(t) = \frac{(t/k)^{n-1} \exp(t/k)}{K\Gamma(n)} \tag{20}$$

where $h_0(t)$ is the ordinate of the IUH, n is the number of reservoirs, and K is the storage delay time of each of the reservoirs. Nash suggested that in fitting equation 20 to unit hydrographs, the value of n need not necessarily be taken as an integer. Gray (*23*), Wu (*70*), and Reich[4] all used the same mathematical function to fit derived unit hydrographs and to synthesize further hydrographs.

The function represented by equations 18 and 20 (which are obviously equivalent) is variously known in the hydrological literature as the "gamma distribution" or "Nash's model." It is the same as the Pearson Type III empirical distribution used in statistics, which is commonly written in the form:

$$f(x) = K\left(1 + \frac{x}{a}\right)^p \exp\left(-\frac{px}{a}\right) \qquad -a < x < \infty \tag{21a}$$

or

$$f(x) = \frac{1}{\Gamma(\lambda)} x^{\lambda-1} e^{-x} \qquad 0 < x < \infty \tag{21b}$$

equation 21 is clearly equivalent to equations 18 and 20.

The shape or distribution represented by equation 20, or the equivalent equation 18, is a two-parameter distribution, K (or b) being a scale factor and n (or a) being a shape factor. Thus, for complete synthesis, it would be necessary to have two independent relationships between the two parameters of the gamma distribution and two independent catchment characteristics.

---

[4] REICH, B. M. DESIGN HYDROGRAPHS FOR VERY SMALL WATERSHEDS FROM RAINFALL. Civil Engin. Sec., Colo. State Univ., 57 pp., illus. 1962.

Edson suggested the direct use of the parameters for correlation purposes, and this has been done by some later workers. Nash preferred to use the first moment about the origin (the lag) and the second moment about the center for correlation. Since these moments can be expressed as very simple expressions involving the parameters n and K, the values determined by one type of correlation can, in practice, easily be converted to the other. Examples are given in the next section of the correlation of gamma distribution parameters with catchment characteristics as derived by Nash (*48*) and Wu (*70*). As mentioned above, the gamma distribution has been widely used in hydrologic studies.

The model developed by TVA (*64*) uses an empirical equation which essentially involves a time transformation of the gamma distribution. It is given by:

$$q(t) = C \cdot \frac{(a+1)t^a b^w}{w!} \exp(-bt^m) \tag{22a}$$

where

$$w = \left(\frac{a+1}{m}\right) \tag{22b}$$

where a, b, and m are parameters. When m has the value of 1, equation 22 reduces to the form of equation 18. The transformed gamma distribution given by equation 22 has been used in stochastic hydrology by Kritskii and Menkel (*32*).

Other mathematical equations have been proposed for the representation of the form of the unit hydrograph, but none of them have been tested as widely as the gamma distribution. DeCoursey (*14*) has proposed the use of the gamma distribution as far as the point of contraflexure on the falling leg of the unit hydrograph and then the use of an exponential recession from that point on. Brakensiek (*6*) has recently proposed the use of a unit hydrograph of the form:

$$\frac{q}{q_{\max}} = \left(\frac{t}{t_p}\right)^{-n} \exp\left[-2n\left(\sqrt{\frac{t_p}{t}}-1\right)\right] \tag{23a}$$

which can also be expressed as:

$$h(t) = \frac{1}{2K} \frac{\exp[-\sqrt{K/t}]}{\Gamma(2n-2)(t/K)^n} \tag{23b}$$

and can be shown to be equivalent to a Pearson Type V empirical distribution with a square root transformation of the time scale. It has two parameters; hence, the problems of fitting and correlation would be essentially the same as for the gamma distribution.

Conceptual Models of the Unit Hydrograph

In the preceding sections, we have traced the development of synthetic unit hydrographs along two different lines. We have seen, as outlined on figure 8–1, that the line of development based on the time-area diagram led to the conceptual model of routing an isosceles triangle through a linear reservoir and that the line of development based on purely empirical relationships led to the use of the gamma distribution, which Nash (*48*) showed to be equivalent to the conceptual model of a cascade of equal linear reservoirs. Within recent years, attention has been concentrated on the simulation of the direct response of catchments by conceptual models.

For a conceptual model to be an adequate tool for synthesizing unit hydrographs, it must provide a convenient method for predicting the shape of the unit hydrograph, and a relationship must also be established between the basic parameter of the conceptual model and the catchment characteristics. For any conceptual model, we can relate such unit hydrograph parameters as the lag (t_L), the time to peak (t_p), or the peak discharge (q_{max}) with the basic parameters of the model. Hence, it should be possible to combine a conceptual model with any of the empirical relationships between unit hydrograph parameters and catchment characteristics (some of which were reviewed in an earlier section), which have been derived independently of any conceptual model. Because we are dealing with synthetic unit hydrographs in this lecture, we will concentrate on conceptual models of linearized systems but will indicate, where appropriate, the way in which the approach can be extended to cover the simulation of nonlinear systems.

The use of conceptual models is quite explicit in a paper by Sugawara and Maruyama (*63*) published in 1956. Starting with the case of a river where the unit hydrograph could be approximately represented by a negative exponential function, the authors developed a conceptual realization of the system operation in the form of an open vessel filled with water. The water discharges through a capillary tube at the bottom, thus giving a linear relationship between outflow and storage in the vessel. They then attempted to model the behavior of certain rivers by means of the sum of several exponential components, that is, by using several different vessels with different storage constants arranged in parallel and taking different proportions of the inflow. By placing the capillary at a level higher than the bottom of the vessel, the threshold effect of initial storage satisfaction could be simulated. (Further) conceptual elements used were vessels tapped by capillaries at a number of points, which produced a segmented linear storage-discharge relation that could approximate a nonlinear relationship and, hence, simulate a nonlinear system.

Shortly afterwards, Nash (*46*) published his work suggesting the gamma distribution as the appropriate equation for the IUH. He derived this equation by considering the effect of routing a delta function through a cascade of

equal linear reservoirs. For n such reservoirs in series, the impulse response of the cascade (that is, the discharge from the last reservoir for a δ-function input to the first) takes the form of equation 20, where K is the storage delay time in each reservoir and n is the number of reservoirs. Nash suggested that this equation could be generalized and n allowed to take nonintegral values.

Nash also gave heuristic arguments for believing that for a cascade of unequal linear reservoirs, the shape would not differ greatly from that given by equation 20. His arguments suggested that for a given value of the dimensionless second moment (m_2), the dimensionless third moment (m_3) for a cascade of unequal linear reservoirs would lie between the value for a cascade of equal linear reservoirs, that is, $2(m_2)^2$, and the value for the combination of a linear channel and a linear reservoir in series, that is, $2(m_2)^{3/2}$. For $m_2=0$ or 1, the values of m_3 are seen to coincide, and it can be readily verified that for values of m_2 between 0 and 1 the lines corresponding to the two limiting cases enclose a comparatively narrow region of the m_3-m_2 plane.

In 1959, Dooge (*17*) attempted to produce a general conceptual model of the unit hydrograph. The argument was made that since the unit hydrograph only existed for a linear system or a linearized system, a general model of the unit hydrograph could contain only linear elements. As mentioned previously, when we wish to simulate we must first make up our minds about the type of simulation and then about the components of our model. In this case, it was decided to use as components of the model only linear distortionless channels and linear storage elements. In an actual watershed, the inflow at any point travels through the system to the outlet and in doing so is subject to both translation effects and storage or attenuation effects.

The assumption made in Dooge's conceptual model (*17*) was that these two effects could be completely separated from one another. The effects of translation in different parts of the catchment were considered to be lumped together and represented by linear channels, whereas the storage effects in the various parts of the catchment were lumped together and represented by linear reservoirs. Since the model is a linear one, we have the full advantage of superposition and the operations may be carried out in any order. Since linear channels merely delay an inflow without distorting it, any number of linear channels can be connected together to form one linear channel. Similarly, the order of the linear reservoirs in a cascade can be altered without affecting the response of the system. Channels and reservoirs can also be interchanged without affecting the response of the system.

The most general model developed was one in which the storage in different parts of the watershed was concentrated so that the flow from any part of the watershed could be simulated by a linear channel whose length corresponded to the time of translation (or time of concentration for that point) and a number of linear reservoirs whose storage time need not be equal. If the assumption is now made that for every point along an isochrone (that is, for

equal translation time to the outlet) the cascade of reservoirs to be passed through in reaching the outlet are the same, the equation of the unit hydrograph can be written as:

$$h_0(t) = \frac{V}{T}\int_0^{t/T} w\left(\frac{\tau}{T}\right)\cdot \frac{\delta(t-\tau)}{\prod_{i(\tau)}^{i=1}(1+K_iD)}\left[d\left(\frac{\tau}{T}\right)\right] \tag{24}$$

where $h_0(t)$ is the ordinate of the IUH, $\bar{V}$ is the volume of inflow, T is the time of concentration of the whole watershed, $w(\tau/T)$ is the time-area-concentration curve, $\delta(t)$ is an impulse function, K_i is a typical reservoir storage delay time, D is the differential operator, and $\prod$ represents successive multiplication.

If the assumption is now made that the cascade of unequal linear reservoirs appropriate to a given isochrone can be replaced by a cascade of equal linear reservoirs, then the unit hydrograph can be written as the convolution of the time-area-concentration curve and a gamma distribution, as follows:

$$\frac{h_0\cdot T}{V} = w\left(\frac{\tau}{T}\right)*\frac{\exp[-(t/K)](t/K)^{n-1}}{K(n-1)!} \tag{25}$$

where n is not a fixed value but varies with the value of t. The general model represented by equation 25 is still extremely flexible. If $n=1$ for all points on the catchment, then the model reduces to the Zoch-Clark model of routing the time-area diagram through a linear reservoir. If n is greater than 1 but the same for all points in the catchment, then the model represents routing the time-area diagram through a number of reservoirs all situated at the outlet. If the time-area-concentration curve is itself a gamma distribution with the time scale K, then the model given by equation 25 reduces to the Nash model of a cascade of equal linear reservoirs with inflow at the upstream end.

A number of conceptual models have been developed by graduate students working under Professor Ven Te Chow (*8*) at the University of Illinois. The model parameters in these cases were correlated not only with the catchment characteristics but also with the intensity of rainfall. The analysis was consequently one of a linearized system rather than a linear system. Such an approach takes account of the nonlinear effects due to varying levels of input. The model used by Singh[5] consisted of translation to the outlet and then successive routing through two linear reservoirs of different storage coefficients. The response function for this model would be:

$$h_0(t) = w\left(\frac{t}{T}\right)*\frac{e^{-t/K_2}-e^{-t/K_1}}{K_2-K_1} \tag{26}$$

---

[5] SINGH, K. P. A NONLINEAR APPROACH TO THE INSTANTANEOUS UNIT HYDROGRAPH. Ph.D. thesis, Ill. Univ. 1962.

Diskin[6] used two cascades of linear reservoirs in parallel, the number of reservoirs and the storage coefficients being different in the two cases. The response function for this model is:

$$h(t)=\frac{a}{K_1(n_1-1)!}\left(\frac{t}{K_1}\right)^{n_1-1}\exp\left(-\frac{t}{K_1}\right)+\frac{1-a}{K_2(n_2-1)!}\left(\frac{t}{K_2}\right)^{n_2-1}\exp\left(-\frac{t}{K_2}\right) \tag{27}$$

cascade, n_1 and n_2 are the number of equal reservoirs in each cascade and K_1 and K_2 are the respective storage delay times.

Kulandaiswamy[7] used a model which can be described as a generalized Muskingum model. As shown in lecture 2, pages 43–57, the essential assumption of the Muskingum method of flood routing is that the storage is a linear function of the inflow and the outflow. When the expression for the storage is inserted in the continuity equation, an equation for the system is obtained linking inflow and outflow and their first derivatives. If the Muskingum assumption is extended to make the storage a function not only of the inflow and the outflow but also of their derivatives, then we have what might be called a generalized Muskingum model. If the coefficients of the terms in the general relationship depend on either the inflow, or the outflow, or both, then we have a generalized nonlinear Muskingum model.

Kulandaiswamy restricted his detailed analysis to the case of a linearized system in which the derivatives of the outflow higher than the third and the derivatives of the inflow higher than the second were ignored, thus giving as a general equation:

$$Q+a_1\frac{dQ}{dt}+a_2\frac{d^2Q}{dt^2}+a_3\frac{d^3Q}{dt^3}=I-b_1\frac{dI}{dt}-b_2\frac{d^2I}{dt^2} \tag{28}$$

where I is the inflow to the system and Q the outflow, and a_1, a_2, a_3, b_1 and b_2 are constants, which are parameters of the system. For a heavily damped system, all the roots of the polynomial on the left-hand side of equation 13 will be real and negative. If the system can be represented by a number of cascades in parallel (without reverse flow), then the values of b_1 and b_2, in the form given by Kulandaiswamy in equation 28, will be negative. If b_1 and b_2 are both equal to zero, then the system reduces to a cascade of three linear reservoirs whose delay times are given by roots of the polynomial on the left-hand side of the equation. If the coefficient b_1 in equation 28 is negative and the coefficient b_2 is zero, then the model will in general consist of two cascades in parallel, each

---

[6] DISKIN, M. H. A BASIC STUDY OF THE LINEARITY OF RAINFALL-RUNOFF PROCESS IN WATERSHEDS. Ph.D. thesis, Ill. Univ. 1964.

[7] KULANDAISWAMY, V. C. A BASIC STUDY OF THE RAINFALL EXCESS-SURFACE RUNOFF RELATIONSHIP IN A BASIN SYSTEM. Ph.D. thesis, Ill. Univ. Urbana. 1964.

made up from linear reservoirs whose delay times are given by the polynomial on the left-hand side of equation 28. If both b_1 and b_2 are negative, then the equation will represent a system of three cascades in parallel.

In classical hydrology, use is made of routing through a nonlinear reservoir in which the storage is proportional to some power of the outflow. If the outflow is controlled by a weir, the exponent in the storage equation would be three-halves; whereas for an outflow controlled by a deep sluice, the power would be one-half. Prasad (*51*) introduced a conceptual model in which the storage was expressed as the sum of two terms, the first of which is related to some power of the outflow (as for the nonlinear reservoir) and the second of which involves the rate of change of outflow.

As with all types of models, it is necessary to find the optimal values of the parameters of a conceptual model. This can be done by the method of least squares, by minimax error, by matching of moments, or by a direct search technique on a digital computer. To use the method of least squares, it would be necessary to differentiate the equations for the IUH with respect to each of the parameters in turn and solve the resulting simultaneous equations. This may involve us in some complex mathematics. It is easy enough to differentiate the gamma distribution with respect to time to find its peak, but to differentiate it with respect to n or K soon leads us into an undergrowth of unfamiliar mathematical functions. Where conceptual models have been used, the criterion of fit has been that the model should match the two coordinates of the peak of the empirically derived hydrograph. In effect, such a criterion means matching the model to the prototype at two points only (the origin and the peak) and ignoring the information available in the remainder of the hydrograph.

In practice, it has been found relatively easy to compute the moments of most conceptual models. This suggests that matching by moments be used as the criterion for determining the optimal values of the parameters. The general formula for the Rth moment of the impulse response of a linear reservoir about the origin is given by:

$$U'_R = (R)!K^R \tag{29}$$

and the general expression for its cumulant is:

$$k_R = (R-1)!K^R \tag{30}$$

If linear storage elements are combined in series, then the cumulants of the resulting cascade are obtained by adding together the corresponding cumulants of the individual reservoirs. If linear reservoirs are combined in parallel, the moments of the resulting system about the origin can be obtained by adding the individual moments about the origin. The moments and the cumulants have the advantage that they take into account the complete unit hydrograph, but for the higher moments there is the disadvantage that the

recession limb of the hydrograph makes a dominant contribution to the value of the moment and errors in the recession may distort this value.

Where a time-area-concentration curve is represented by a geometrical figure and routed through a linear reservoir, then the cumulants of the resulting conceptual model are obtained by adding the cumulants of the geometrical figure representing the time-area-concentration curve and the cumulants of the linear reservoir. Thus, for the case of the routed isosceles triangle, if the base of the triangle is given by T and the storage delay time of the linear reservoir by K, the cumulants of the resulting model are as follows:

$$k_1 = U_1' = \frac{T}{2} + K \tag{31a}$$

$$k_2 = U_2 = \frac{T^2}{24} + K^2 \tag{31b}$$

$$k_3 = U_3 = 2K^3 \tag{31c}$$

$$k_4 = U_4 - 3(U_2)^2 = 6K^4 - \frac{T^4}{960} \tag{31d}$$

If the respective moments (or cumulants) of the conceptual model are equated to the derived moments (or cumulants) of an empirical hydrograph, then the values of the parameters that are optimal in the sense of moment matching can be evaluated.

As mentioned at the beginning of the section, a conceptual model can only be used to synthesize an actual unit hydrograph if some rule is available for predicting the values of the parameters of the conceptual model on the basis of readily available catchment characteristics. Usually such rules are based on the correlation of the model parameters with catchment characteristics for unit hydrographs derived from catchments where records are available. If the parameters of the conceptual models chosen for conceptual models are not very stable, or if the optimal values of the parameters cannot be sharply identified from the past records of input and output, then the correlations on which is based the synthesis of the unit hydrograph for a ungaged catchment will be unreliable.

There is a great deal to recommend the proposal by Nash (*47*) that the moments be used as the basis of this correlation because the lower order moments are more stable than such parameters as time-to-peak and peak discharge. On the basis of 90 storms on 30 British catchments (whose area varied from 4.8 to 859 square miles), Nash (*48*) derived the relationship:

$$U_1' = t_L = 27.6 \left(\frac{A}{S}\right)^{0.3} \tag{32}$$

where U_1' is the first moment or lag, A is the area in square miles, and S is the overland slope in parts per ten thousand. Before adopting this relationship, Nash had tried the regression of the first moment on various combinations of nine catchments characteristics. The coefficient of multiple correlation (R) for the relationship given in equation 32 was 0.90. When the dimensionless second moment was correlated against the catchment characteristics, the best result obtained was:

$$m_2 = \frac{U_2}{(U_1')^2} = \frac{0.41}{L^{0.1}} \tag{33}$$

where m_2 is the dimensionless second moment and L is the length of the longest stream to the catchment boundary in miles. In this second regression, the coefficient of multiple correlation (R) was 0.45.

Once the moments of the unit hydrograph have been determined and estimated, the equations relating the moments of the conceptual model chosen for synthesis to the basic model parameters can be solved for the values of these parameters. In gamma distributions, the parameters can be determined directly from the moments since we have:

$$K = \frac{m_2}{m_1} \tag{34}$$

$$n = \frac{m_1^2}{m_2} \tag{35}$$

The parameter values derived in this way can then be used to generate the particular gamma distribution which is used as a representation of the IUH for the catchment being studied.

Wu (*70*) has reported on a synthetic method derived from the records for 21 watersheds in Indiana varying from 7 to 100 square miles. He correlated the time-to-peak with catchment characteristics and found:

$$t_p = \frac{31.42(A)^{1.085}}{(L)^{1.233}(S)^{0.668}} \tag{36}$$

where t_p is the time to peak in hours, A is the area in square miles, L is the length of the main stream in miles, and S is the slope of the main stream in parts per ten thousand. The other parameter which was correlated by Wu was the recession constant K, for which he proposed:

$$K = \frac{780(A)^{0.937}}{(L)^{1.474}(S)^{1.473}} \tag{37}$$

where K is the storage constant in hours, and the catchment characteristics

are as defined for equation 36. Because the time-to-peak for the gamma distribution is related to the parameters n and K by:

$$t_p = (n-1)K \tag{38}$$

there is no difficulty in deriving the value of n from equations 36 and 37 and so generating the synthetic unit hydrograph.

Comparison of Methods

In this lecture, we have outlined a number of methods which can be used in attempting to solve the problem of synthetic unit hydrographs, that is, the problem of predicting the unit hydrograph for a watershed in which no records of inflow and outflow are available. A large number of methods have been proposed, some belonging to the category of time-area methods, some to the category of empirical methods, some to the category of conceptual models. The hydrologist faced with an immediate problem, but anxious to use as objective a method as possible might well ask, "How shall I choose between these methods?" To answer this question, it is necessary to compare the methods belonging to each category and also to compare the different categories.

In time-area methods, we must decide whether to use the actual time-area-concentration curve or a geometrical figure and whether to route through one or more linear reservoirs. It would appear that the extreme tedium of deriving a time-area-concentration curve is not justified by any appreciable increase in accuracy in representing actual unit hydrographs and that the judicious replacement of the time-area-concentration curve by a geometrical figure is unobjectionable. Care must be taken, however, that a catchment of untypical shape is not forced into the straight jacket of being represented by a geometrical figure whose shape is based on the general shape of other catchments in the region. Once it has been decided to route a geometrical figure rather than a derived area-concentration curve, the problem really reduces to one of a conceptual model. The question of what figure to use and how many reservoirs to route through can be determined by the methods given below for conceptual models.

The empirical curves used to represent the unit hydrograph (nearly all of which are one-parameter models) can be compared by dimensionless plotting. It is important to remember that for one-parameter curves only one parameter is available to act as a scale factor. Thus, a comparison by plotting the ratio of discharge to peak discharge against time over time-to-peak may not be valid as the volume under the hydrograph may not be normalized to unit volume.

Both theoretical considerations and practical results in the field indicate that the lag (the time interval between the center of precipitation excess and the center of direct storm runoff) is the most stable time parameter and the

one most highly correlated with the catchment characteristics usually used. It is suggested, therefore, that any comparison of dimensionless unit hydrographs should be made by plotting:

$$\frac{q \cdot t_L}{V} = \phi\left(\frac{t}{t_L}, \frac{D}{t_L}\right) \tag{32}$$

where q is the ordinate of the unit hydrograph, t_L is the lag as defined above, V is the volume of rainfall excess, and D is the duration of rainfall excess. Similarly any dimensionless S-curve should be plotted as:

$$S(t) = \phi\left(\frac{t}{t_L}\right) \tag{33}$$

In each case, ϕ is an undefined function representing the standard shape adopted.

A complete comparison of different methods of synthetic unit hydrograph generation based on empirical curves must take into account the empirical relationships with catchment characteristics used to determine the basic unit hydrograph parameter or parameters. A number of comparisons have been made but none of them were comprehensive. Dooge[8] compared, in a crude fashion, the shape obtained by routing an isosceles triangle through a linear reservoir with the shape of the dimensionless unit hydrographs proposed by Commons (*12*), Williams (*69*), and the Soil Conservation Service (*68*). The comparison was made by plotting the ratio of the discharge ordinate to maximum discharge ($q/q_{\max}$) against the ratio of the time to the time-of-peak, (t/t_p). Because all the curves were constrained to go through common points at the origin and the peak, no great differences were revealed.

Coulter (*13*) in a study of rural catchments in New South Wales, compared the synthetic unit hydrographs generated for nine catchments by the methods of Taylor and Schwartz (*63*), Clark and Johnstone (*9*, *29*), Eaton (*19*), O'Kelly (*49*), and Morgan and Hullinghorst.[9] For a few of the catchments, the peak flows predicted by the various methods were quite close to one another, but other catchments showed a three- or fourfold variation.

Dooge (footnote 1) put forward the idea of comparing methods of synthetic unit hydrograph generation on the basis of their predictions of the unit hydrograph for one or more standard catchments. A standard catchment is taken as being one in *geomorphological equilibrium*. Though all catchments are not in equilibrium, it may be assumed that catchments out of equilibrium are tending to equilibrium and tend so more rapidly the more they are out of equilibrium. Once the size of the standard catchment was fixed at 100 square miles, the remaining topographical characteristics were fixed on the basis of

[8] See footnote 1, p. 199.
[9] See footnote 3, p. 204.

geomorphological principles and published relationships. In this case, the channel slope was taken as 100 feet per mile and the ground slope as 400 feet per mile. Other characteristics were a drainage density of 1.25 and a length of overland flow of 2,200 feet.

Morgan and Johnson (*42*) compared the relative accuracy and reliability of the synthetic unit hydrograph methods proposed by Snyder (*49*), the Soil Conservation Service (*68*), Commons (*12*), and Mitchell (*41*). They applied the methods to 12 drainage areas in Illinois ranging in size from 10 to 101 square miles. Again wide variations between the synthetic unit graphs and between them and the actual unit graph were found. No method consistently over- or underestimated the actual peak discharge. The highest methods of peak discharge ranked in the following order: SCS, Commons, Mitchell, and Snyder. There was little difference between the estimates by the SCS method and the Commons method. When an observed lag was used instead of a lag estimated on the basis of catchment characteristics, the synthetic methods gave much better results. Studies by Coulter (*13*) and by Morgan and Johnson (*42*) are of interest because they test the general applicability of the empirical relationships between unit hydrograph parameters and catchment characteristics originally derived from regions which are widely separated from one another.

The following tabulation shows the ability of a number of methods to predict the lag of a standard catchment. When McCarthy's method (see

Author	*Location*	*Lag in hours*
McCarthy (1938).....	Connecticut	16.2
Snyder (1938).....	Appalachians	16.5
Mitchell (1948).....	Illinois	15.4
O'Kelly (1955).....	Ireland	14.0
Nash (1960).....	Britain	15.9

footnote 2), which was based on a very few streams in Connecticut, was applied to the standard catchment of 100 square miles, a lag of 16.2 hours was obtained; Snyder's method based on work in the Appalachians gave a lag of 16.5 hours; Mitchell's method based on watersheds in Illinois gave a lag of 15.4 hours; O'Kelly's method based on a number of catchments in Ireland, gave 14.0 hours; and Nash's method based on catchments in Britain a lag of 15.9 hours. With the exception of the result by O'Kelly's method, these are all remarkably close varying only from 15.4 to 16.5 hours, a difference of only 7 percent. In addition to this remarkable concordance, there is a reason why the catchments studied by O'Kelly would be expected to have shorter lag times for standard dimensions. O'Kelly was concerned with the problem of designing arterial drainage schemes (main river improvement schemes) in Ireland. Accordingly, his method was based on the characteristics of rivers for which such schemes had been carried out. Under post-drainage conditions,

catchments are expected to show shorter lag times than the average. It would appear that, while the dimensionless unit hydrographs, which were used in the past is a purely empirical fashion, will be replaced by mathematical equations or by conceptual models, the correlations of hydrograph parameters (particularly lag) with catchment characteristics developed in the classical synthetic methods may still be useful.

There remains the problem of deciding how complex the mathematical equation or conceptual model must be and how to choose between different models (or equations) of equal complexity. Nash (*47*, *48*) proposed a general synthetic scheme along the lines shown in figure 8–3. As has been repeatedly emphasized, the relationships on which the synthesis are based must be derived from the analysis of a number of watersheds for which measurements are available and which serve as a sample for the region. Nash suggested that the moments of the IUH be derived from a set of sample catchments and these moments correlated with one another and with the catchment characteristics to determine the number of degrees of freedom inherent in the response of a catchment when operating on precipitation excess to produce flood runoff. This would enable us to determine the number of parameters needed in the simulation system. He suggested that the dimensionless moments of the actual

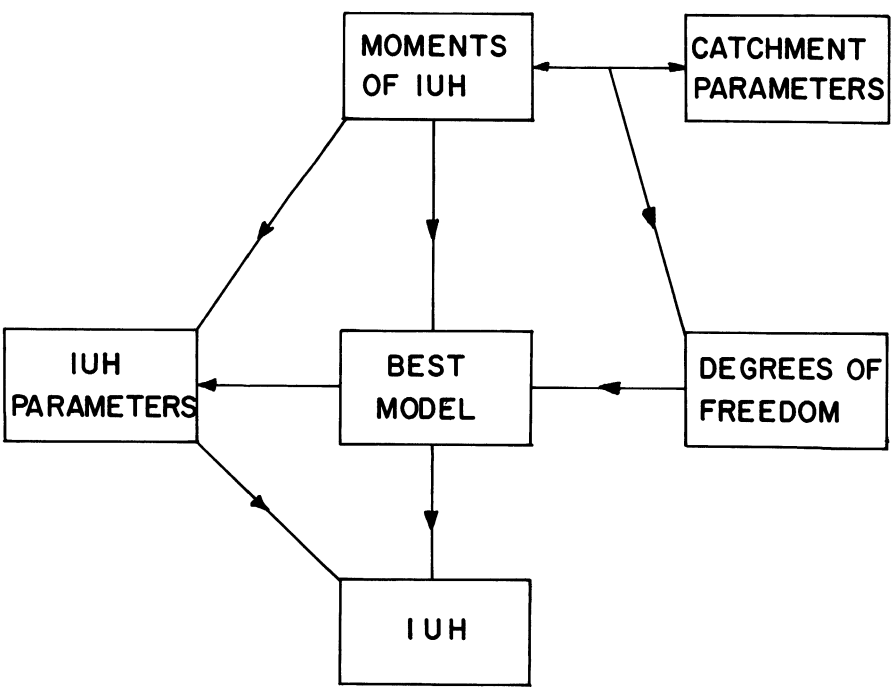

FIGURE 8–3.—Nash's synthetic scheme.

responses (and the dimensionless moments of a number of conceptual model systems with the required number of parameters) be plotted against one another. On such a plot of m_3 against m_2 or m_4 against m_2, a one-parameter model would plot as a single point; a two-parameter model, as a single curve; and a three-parameter model, as a family of curves. By comparing the curves for the model system with the plot of points for actual catchments, the best model could be chosen.

Once the correlations of IUH moments with catchment characteristics have been determined and the model chosen, it is possible to synthesize the unit hydrograph for a watershed for which no records are available. Firstly, the moments of the IUH are determined by the regression equations using the values of the catchment characteristics of the particular catchment. These predicted moments can be equated to the expressions for the corresponding moments of the model chosen, and the optimal values of the model parameters for the particular catchment thus determined. Once the model and the optimal values of the parameters are known, the complete IUH for the particular watershed can be generated.

Nash (*48*) applied his method to the data for 90 storms on 30 catchments in Great Britain. Regression analysis gave a relationship between the first moment (m_1) and the catchment characteristics of area and overland slope with a coefficient of multiple correlation of 0.90. A further regression of the second moment (m_2) with m_1 and the overland slope gave a coefficient with a multiple correlation of 0.51. Though the latter result is statistically significant, it does not give a good determination of the second moment and, hence, the ability of the scheme to predict an unknown unit hydrograph is impaired.

When Nash plotted the moments of his actual responses against one another, as shown on figure 8–4, they covered a region rather than fell along a single line. In discussing Nash's paper, Dooge pointed out that the data and the curve are not strictly comparable. The data were derived on the assumption that the base of the unit hydrograph was three times its lag; whereas, the base of the gamma distribution is infinite. A crude correction can be made and the two made more comparable by truncating the gamma distribution according to the method of base flow separation given by Nash so that the base of the truncated gamma distribution is three times its lag. When this is done, the truncated gamma distribution plots as a line lying below the data points shown on figure 8–4 and, thus, appears to approximate a limiting form rather than an average form for the IUH's derived by Nash. Figure 8–4 also shows the comparison of the data with three models: (1) a channel and reservoir in series (curve *A*); (2) a cascade of equal linear reservoirs with an upstream inflow, that is, the gamma distribution (curve *B*); (3) and the cascade of equal linear reservoirs with lateral inflow (curve *C*).

The general synthetic scheme proposed by Nash could, with advantage, be modified to the scheme outlined on figure 8–5. It is suggested that, instead of

correlating the moments with the catchments characteristics, the moments be correlated among themselves to determine the number of degrees of freedom. Thus, in a two-parameter system, the third moment will be completely determined once the first and second moments are known; whereas in a three-parameter system, the fourth moment will be known once the first, second, and third moments are known. If the moments are made dimensionless by using the first moment as a scaling factor, then the criterion for a two-parameter model is that the third dimensionless moment is completely determined by the second dimensionless moment (or cumulant); the criterion for a three-parameter system is that the fourth dimensionless moment (or cumulant) is completely determined by the second and the third dimensionless moments.

In his discussion of Nash's paper, Dooge (*18*) calculated the coefficient of multiple correlation of m_3 with m_2 for Nash's data as 0.717. This indicated that the variation in the third dimensionless moment (m_3) was only 50 percent accounted for by variations in the dimensionless second moment (m_2) and, hence, that the two-parameter model would not be highly efficient as a basis for simulation. However, the coefficient of multiple correlation between the

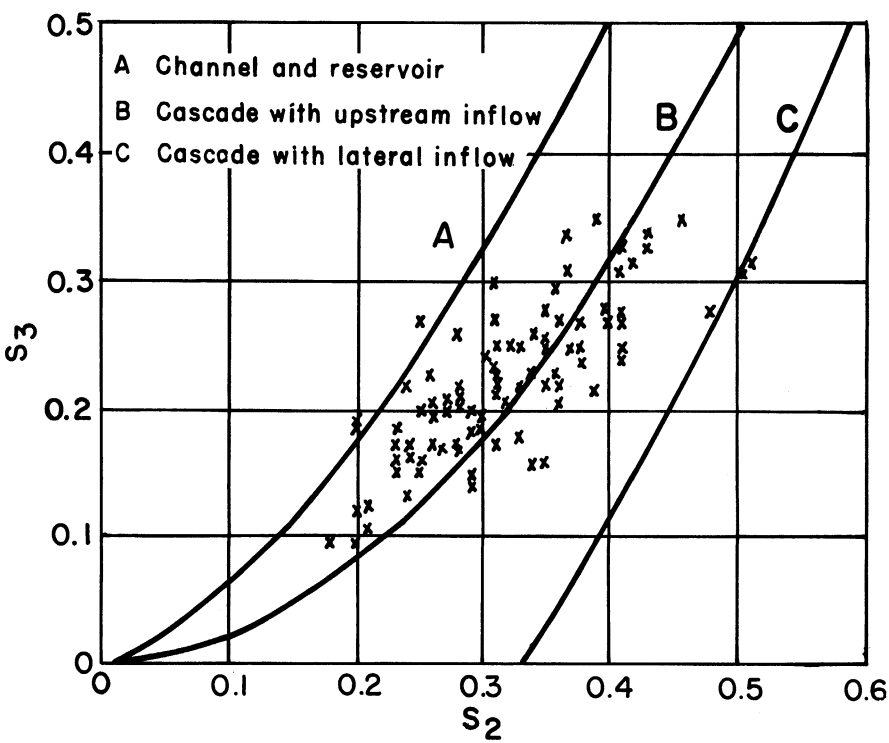

FIGURE 8–4.—Shape factor diagram for Nash's data.

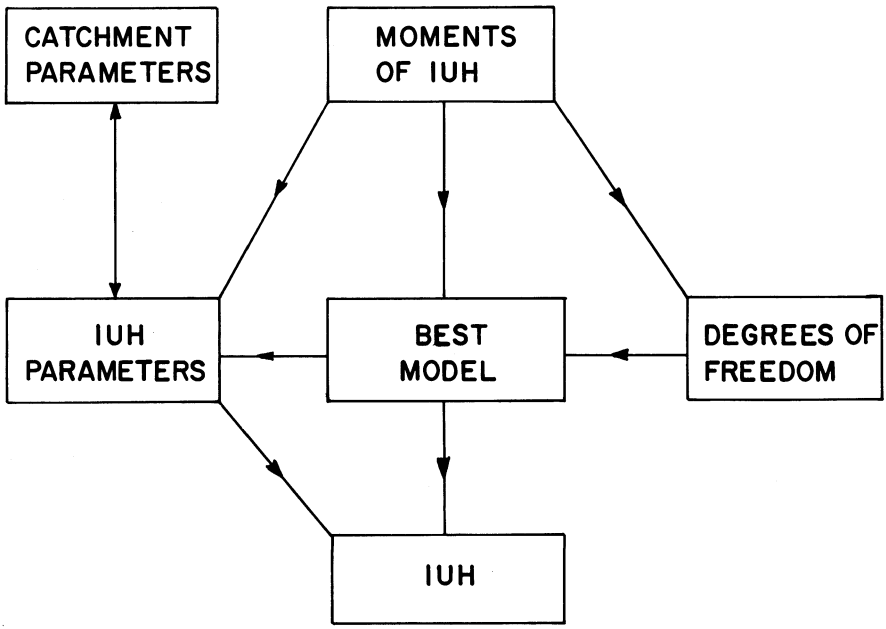

FIGURE 8–5.—Modified synthetic scheme.

dimensionless fourth moment (m_4) and the two lower dimensionless moments (m_3 and m_2) was found to be 0.93, indicating that the variance in m_4 was accounted for by the variance in the lower moments to the extent of almost 90 percent. Considering the basic nature of Nash's date (which were normal river observations rather than research readings), this was a very high correlation and indicated that a three-parameter model would probably give as satisfactory a simulation as the data warranted. The remainder of the modified general synthetic scheme shown on figure 8–5 is the same as for Nash's original proposal shown on figure 8–3, except that the parameters of the IUH are correlated directly with catchment parameters.

It must be stressed that what is required in the correlation for unit hydrograph synthesis is not necessarily a correlation with individual catchment characteristics. To determine the three independent IUH parameters that would be required for a three-parameter model, it is necessary to have three independent catchment parameters which between them would account for 90 percent or more of the variation in the shape of the IUH. Each of these parameters might be made up from a number of catchment characteristics (such as area, slope, drainage density, and shape) in the same way as the Froude number and the Reynolds' number are made up from a number of hydraulic characteristics.

The determination of the significant grouping of catchment characteristics

into catchment parameters remains one of the great unsolved problems of surface water hydrology. Factor analysis may help in the preliminary trial grouping of catchment characteristics, but it is likely that the final significant forms of the groupings will only emerge through a better understanding of geomorphological processes.

The shape factor diagram in which dimensionless moments or cumulants are plotted against one another is a most useful device for comparing alternative conceptual models of the same number of parameters and of comparing conceptual models with actual data. Thus, figure 8–6 shows a comparison

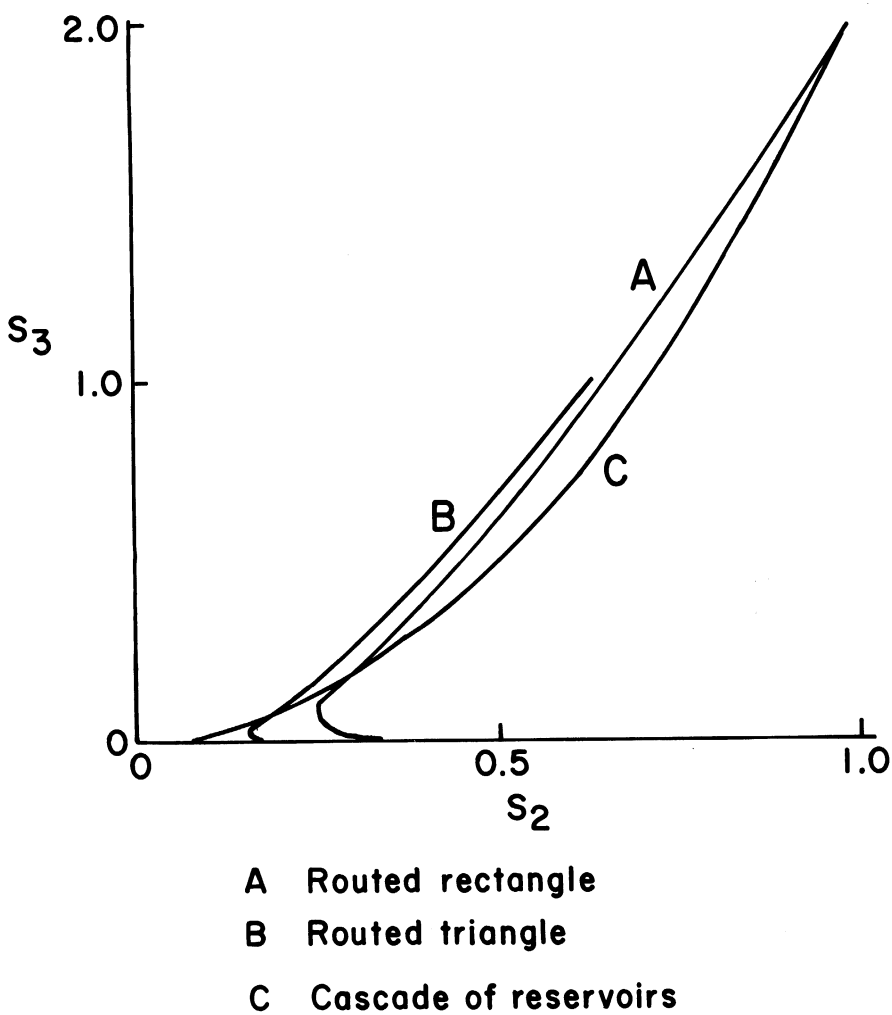

FIGURE 8–6.—Shape factor for models.

between three two-parameter conceptual models: (1) a routed rectangle, (2) a routed triangle, and (3) a cascade of equal linear reservoirs. It can be seen that each of these two-parameter conceptual models defines a line in the s_3-s_2 plane, where s_3 is the dimensionless third cumulant (or moment) and s_2 is the dimensionless second cumulant (or moment). These lines plot relatively closely together on the diagram, thus explaining why all of these models have been suggested as a basis for simulating the same type of prototype system.

Figure 8–7 shows a comparison of a Pearson Type III distribution (gamma distribution) with a Pearson Type V distribution and a Pearson Type I distribution. This diagram could be used to decide which Pearson distribution to choose for fitting unit hydrographs or other response curves by taking the distribution which lay closest on the shape factor diagram to the plotted points corresponding to the unit hydrographs for a number of sample catchments.

Figure 8–8 shows a comparison between the time-transformed gamma distribution and the ordinary gamma distribution. The case plotted is for a value of $m=\frac{1}{2}$ and corresponds to the type of model used by TVA. If curves were drawn for other values of m, it would be possible to see if the plotted points from sample catchments all fell along one line. This would enable us to use a two-parameter model based on the value of m corresponding to that line or else to indicate whether the family of curves swept out the region of plotted points, thus allowing us to use equation 22 as a three-parameter simulation of the prototype system.

Problems on Synthetic Unit Hydrographs

1. Compare the values of the lag, time-to-peak, and peak discharge given by four different synthetic unit hydrograph methods for the 100 square mile catchment whose characteristics are listed on Appendix table 6.

2. Compare the values of the lag, time-to-peak, and peak discharge given by four different synthetic unit hydrograph methods (two empirical and two time area) for the catchment whose characteristics are given on Appendix table 7.

3. Compare a number of standard unit hydrograph shapes by plotting dimensionless ordinates against dimensionless time.

4. Compare a number of standard S-curves by plotting dimensionless ordinates against dimensionless time.

5. Compare a number of standard unit hydrograph shapes on a plot of dimensionless third moment versus dimensionless second moment.

6. Describe the various steps of one particular method for synthetic unit hydrographs, and comment on the strong and weak points in the method.

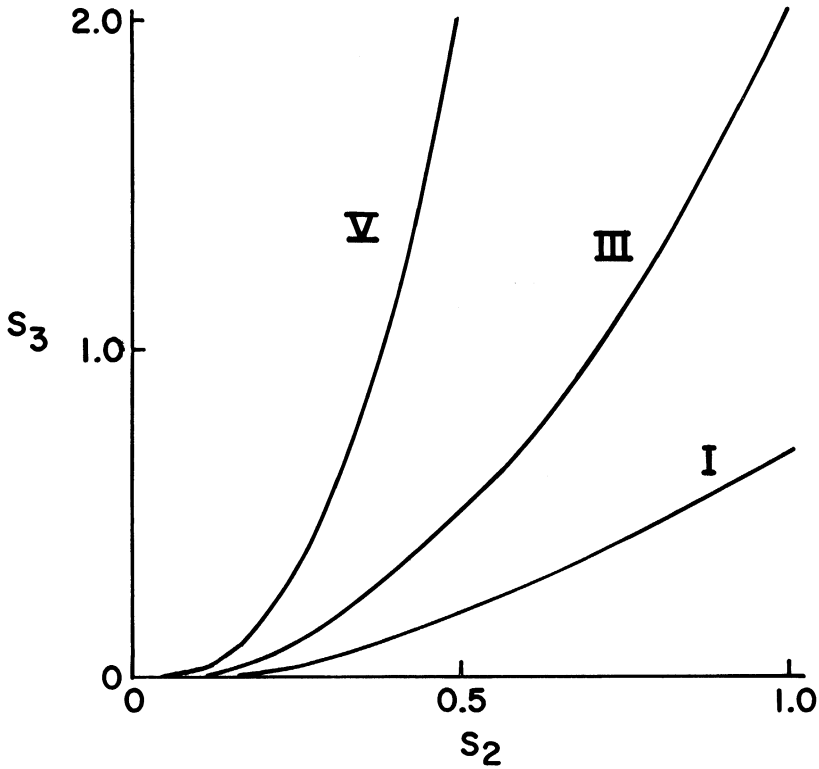

TYPE I $f = k\left(1+\frac{x}{a_1}\right)^{m_1}\left(1-\frac{x}{a_2}\right)^{2m_1+1}$

TYPE III $f = k\left(1+\frac{x}{a}\right)^{p}\exp\left(-\frac{px}{a}\right)$

TYPE V $f = \frac{\gamma^{p-1}x^{-p}e^{-\gamma/x}}{r(p-1)}$

FIGURE 8–7.—Shape factor for Pearson's empirical distributions.

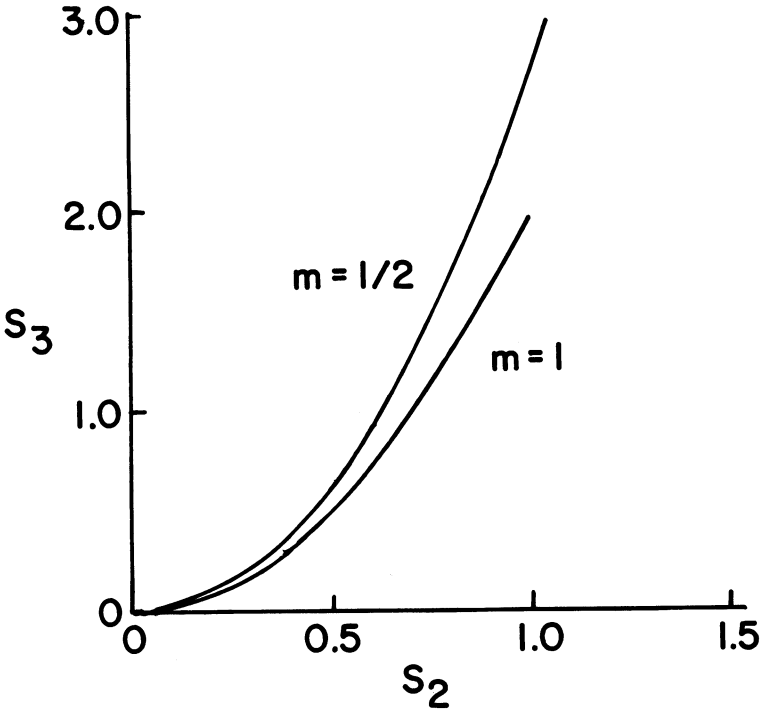

$$h(t) = \frac{m}{k} \frac{\exp\left[-(t/K)^m\right](t/K)^{n-1}}{(n/m - 1)!}$$

$$k_1 = K \frac{\left(\frac{n+1}{m} - 1\right)!}{\left(\frac{n}{m} - 1\right)!}$$

$$k_2 = K^2 \left[\frac{\left(\frac{n+2}{m} - 1\right)!\left(\frac{n}{m} - 1\right)! - \left(\frac{n+1}{m} - 1\right)!^2}{\left(\frac{n}{m} - 1\right)!^2}\right]$$

FIGURE 8–8.—Shape factors for time-transformed gamma distribution.

7. Describe the relationship between the generalized Muskingum formulation of linear catchment response with the general linear equation with constant coefficients. Illustrate by simple example.

8. Describe the relationship between the general linear equation with constant coefficients and the representation of the linear catchment response in terms of equal linear storage elements. Illustrate with a simple example.

9. Describe the relationship between the general linear equation with constant coefficients and the representation of the catchment by a small number of unequal storage elements. Illustrate your answer by a simple example.

10. Choose a special linear model with an infinite time base. Calculate the effect of truncating this response curve to make the base finite and work out the corrections to be made to the moments of the response curve.

11. Compare a number of two-parameter models by plotting dimensionless peak discharge against dimensionless time-to-peak.

12. Compare a number of two-parameter models by plotting in terms of dimensionless shape factors.

13. Devise a general synthetic scheme for linear catchment response. Work out a flow diagram for the computations involved. Apply this flow diagram to a set of reliable data.

Literature Cited

(1) American Society of Civil Engineers.
1969. design and construction of sanitary and storm sewers. Manual and Reports on Engineering Practices No. 37. 128 pp. New York.

(2) Barnes, B. S.
1952. unit-graph procedures. U.S. Bur. Reclam. Washington, D.C.

(3) Bender, D. L., and Roberson, J. A.
1961. the use of a dimensionless unit hydrograph to derive unit hydrograph for some pacific northwest basins. Jour. Geophys. Res. 66(2): 521–527.

(4) Bernard, M. M.
1935. an approach to determinate streamflow. Amer. Soc. Civ. Engin. Trans. 100: 347.

(5) Betson, Roger P., and Green, Ralph F.
1968. analytically derived unitgraph and runoff. Amer. Soc. Civ. Engin., Jour. Hydraulics Div. 94(HY-6): 1489–1505.

(6) Brakensiek, D. L.
1967. a technique for analysis of runoff hydrographs. Jour. Hydrol. 5(1): 21–32.

(7) Chamier, G.
1897. capacities required for culverts and flood-openings. Inst. Civ. Engin. Proc. 134: 313.

(8) Chow, Ven Te.
1964. runoff. Section 14: 54 pp., *In* Chow, Ven Te, ed., Handbook of Applied Hydrology. New York.

(9) CLARK, C. O.
1945. STORAGE AND THE UNIT-HYDROGRAPH. Amer. Soc. Civ. Engin. 110: 1416–1446.

(10) CLARK, JOHN I.
1966. MORPHOMETRY FROM MAPS. 40 pp. *In* Dury, G. H., ed., Essays in Geomorphology. London.

(11) COLEMAN, G. S., and JOHNSON, A.
1931. RAINFALL RUNOFF. Inst. Munic. County Engin. Jour. 58: 1403.

(12) COMMONS, C. G.
1942. FLOOD HYDROGRAPHS. Civ. Engin. 12: 571–572.

(13) COULTER, C. G.
1961. FLOOD ESTIMATION FOR UNGAUGED RURAL CATCHMENTS. Water Res. Lab. Rpt. 40. University of New South Wales, Sydney.

(14) DECOURSEY, D. G.
1966. A RUNOFF HYDROGRAPH EQUATION. U.S. Dept. Agr. Agr. Res. Serv. ARS 41-116, 23 pp.

(15) DOOGE, J. C. I.
1955. Discussion of *the employment of unit-hydrographs to determine the flows of Irish arterial drainage channels,* by J. J. O'Kelly. Inst. Civ. Engin. (Ireland), Proc. v. 4, pt. II.

(16) ———
1957. THE RATIONAL METHOD FOR ESTIMATING FLOOD PEAKS. Engineering 184: 311–374. London.

(17) ———
1959. A GENERAL THEORY OF THE UNIT HYDROGRAPH. Jour. Geophys. Res. 64(2): 241–256.

(18) ———
1961. Discussion of *a unit hydrograph study with particular reference to British catchments,* by J. E. Nash. Inst. Civ. Engin. (Ireland) Proc., v. 20: 467–470.

(19) EATON, T. D.
1954. THE DERIVATION AND SYNTHESIS OF THE UNIT-HYDROGRAPH WHEN RAINFALL RECORDS ARE INADEQUATE. Hydrologic studies and investigations. Inst. Engin. Austral. Jour. 26: 239–243.

(20) EDSON, C. G.
1951. PARAMETERS FOR RELATING UNIT HYDROGRAPHS TO WATERSHED CHARACTERISTICS. Amer. Geophys. Union Trans. 32(4): 591–596.

(21) ESCRITT, L. P.
1950. SURFACE WATER SEWERAGE. 200 pp., illus. London.

(22) GRAY, D. M.
1961. SYNTHETIC UNIT HYDROGRAPHS FOR SMALL WATERSHEDS. Amer. Soc. Civ. Engin., Jour. Hydraulics Div. 87(HY4): 33–54.

(23) ———
1962. DERIVATION OF HYDROGRAPHS FOR SMALL WATERSHEDS FROM MEASURABLE PHYSICAL CHARACTERISTICS. Iowa State Univ., Agr. and Home Econ. Expt. Sta. Res. Bul. 506: 514–570.

(24) HARTE, C. A.
1932. Discussion of *rainfall-runoff calculations,* by M. T. M. Ormsby. Inst. Munic. County Engin. Jour. 59: 978.

(25) HAWKEN, W. H., and ROSS, C. N.
1921. THE CALCULATION OF FLOOD DISCHARGES BY USE OF A TIME-CONTOUR PLAN. Inst. Engin. Austral. Jour. 2: 85–92.

(26) HENDERSON, F. M.
1963. SOME PROPERTIES OF THE UNIT HYDROGRAPH. Jour. Geophys. Res. 68(16).

(27) HORTON, R. E.
1941. VIRTUAL CHANNEL INFLOW GRAPHS. Amer. Geophys. Union Trans. 22: 811–820.

(28) JENS, S. W.
1948. DRAINAGE OF AIRPORT SURFACES—SOME BASIC DESIGN CONSIDERATIONS. Amer. Soc. Civ. Engin. Trans. 113: 785–809.

(29) JOHNSTONE, D., and CROSS, W. P.
1949. ELEMENTS OF APPLIED HYDROLOGY. 276 pp., ills. New York.

(30) JUDSON, C. C.
1932. RUNOFF CALCULATIONS, A NEW METHOD. Inst. Munic. County Engin. Jour. 59: 861.

(31) KIRPICH, Z. P.
1940. TIME OF CONCENTRATION OF SMALL AGRICULTURAL WATERSHEDS. Civ. Engin. 10(6): 362.

(32) KRITSKII, S. N., and MENKEL, M. F.
1950. GIDROLOGICHESKIE OSNOVY RECHNOI GIDROTEKHNIKI [HYDROLOGICAL BASIS OF RIVER HYDROTECHNICS]. Izadatel'stvo AN SSR.

(33) KUCHMENT, L. S.
1964. OBOBSHCHENNAYA FORMOOLA DLYA RASCHETA GIDROGRAFA STOKA [A GENERALIZED FORMULA FOR THE CALCULATION OF THE DISCHARGE HYDROGRAPH]. Central Forecasting Unit Trans. (TsIP), 113: 23. Moscow. NLLST RTS No. 3355, Boston Spa, Yorkshire, England. Sept. 1966.

(34) KUICHLING, EMIL.
1889. THE RELATION BETWEEN THE RAINFALL AND THE DISCHARGE OF SEWERS IN POPULOUS DISTRICTS. Amer. Soc. Civ. Engin. Trans. 20: 1–56.

(35) LANGBEIN, W. B.
1940. CHANNEL STORAGE IN UNIT HYDROGRAPH STUDIES. Amer. Geophys. Union Trans. 21: 620–627.

(36) LATEN, N. R., REILLY, T. L., and MINOTTE, J. S.
1940. DISTRIBUTION GRAPHS AND FLOOD ROUTING IN THE UPPER OHIO RIVER BASIN. Amer. Geophys. Union Trans. 2: 649–659.

(37) LAURENSON, E. M.
1932.

(38) ———
1960. HYDROGRAPH SYNTHETIS BY RUNOFF ROUTING. Water Res. Lab. Rpt. 66. University of New South Wales, Sydney.

(39) LINSLEY, R. K., KOHLER, M. A., and PAULHUS, J. L. H.
1949. APPLIED HYDROLOGY. 689 pp., illus. New York.

(40) LLOYD-DAVIES, D. E.
1906. THE ELIMINATION OF STORM WATER FROM SEWERAGE SYSTEMS. Inst. Civ. Engin. Proc. 164: 41–67. London.

(41) MITCHELL, W. D.
1948. UNIT HYDROGRAPHS IN ILLINOIS. Ill. State Div. Waterways. Springfield.

(42) MORGAN, P. E., and JOHNSON, S. M.
1962. ANALYSIS OF SYNTHETIC UNIT-GRAPH METHODS. Amer. Soc. Civ. Engin., Jour. Hydraulics Div. 88(HY5): 199–220.

(43) MULVANEY, T. J.
1850. ON THE USE OF SELF-REGISTERING RAIN AND FLOOD GAUGES. Inst. Civ. Engin. (Ireland) Trans. 4(2): 1–8. Dublin.

(44) MUNRO, C. H.
1956. BASIC THEORY OF URBAN STORM DRAINAGE DESIGN. Inst. Engin. Austral. Jour. 28: 301.

(45) NASH, J. E.
1958. DETERMINING RUNOFF FROM RAINFALL. Inst. Civ. Engin. (Ireland) Proc., 10: 163–184.

(46) ———
1958. THE FORM OF THE INSTANTANEOUS UNIT HYDROGRAPH. General Assembly of Toronto. Internatl. Assoc. Sci. Hydrol. (Gentbrugge) Pub. 42, Compt. Rend. 3: 114–118.

(47) ———
1959. SYSTEMATIC DETERMINATION OF UNIT HYDROGRAPH PARAMETERS. Jour. Geophys. Res. 64(1): 111–115.

(48) ———
1960. A UNIT HYDROGRAPH STUDY WITH PARTICULAR REFERENCE TO BRITISH CATCHMENTS. Inst. Civ. Engin. Proc. 17: 249–282.

(49) O'KELLY, J. J.
1955. THE EMPLOYMENT OF UNIT-HYDROGRAPHS TO DETERMINE THE FLOWS OF IRISH ARTERIAL DRAINAGE CHANNELS. Inst. Civ. Engin. (Ireland) Proc. 4(3): 365–412.

(50) ORMSBY, M. T. M.
1932. RAINFALL AND RUNOFF CALCULATIONS. Inst. Munic. County Engin. Jour. 59: 978.

(51) PRASAD, RAMANAND.
1967. A NONLINEAR HYDROLOGIC SYSTEM RESPONSE MODEL. Amer. Soc. Civ. Engin., Jour. Hydraulics Div. 93(HY4): 201–221.

(52) REID, JOHN.
1926. THE ESTIMATION OF STORM-WATER DISCHARGE. Inst. Munic. County Engin. Jour. 53: 997.

(53) RILEY, D. W.
1931. NOTES ON CALCULATING THE FLOW OF SURFACE WATER IN SEWERS. Inst. Munic. County Engin. Jour. 58: 1483.

(54) ROSS, C. N.
1921. THE CALCULATION OF FLOOD DISCHARGES BY THE USE OF A TIME CONTOUR PLAN. Inst. Engin. Austral. Trans. 2: 85.

(55) ROUSCULP, J. A.
1927. RAINFALL-RUNOFF ANALYSIS IN STORM-SEWER DESIGN. Engin. News-Rec. 98: 270.

(56) SATO, S., and MIKAWA, H.
1956. A METHOD OF ESTIMATING RUNOFF FROM RAINFALL. Proceedings of Regional Technical Conference on Water Resources Development in Asia and the Far East. U.N. Flood Control Ser. 9: 152–155.

(57) SHERMAN, L. K.
1932. STREAM FLOW FROM RAINFALL BY THE UNIT-GRAPH METHOD. Engin. News-Rec. 108: 501-505.

(58) ———
1932. THE RELATION OF HYDROGRAPHS OF RUNOFF TO SIZE AND CHARACTER OF DRAINAGE BASINS. Amer. Geophys. Union Trans. 13: 332–339.

(59) SNYDER, F. F.
1938. SYNTHETIC UNIT GRAPHS. Amer. Geophys. Union Trans. 19(1): 447–454.

(60) STRAHLER, A. N.
1964. QUANTITATIVE GEOMORPHOLOGY OF DRAINAGE BASINS AND CHANNEL NETWORK. Sec. 4-II: 38 pp., *In* Chow, Ven Te, ed., Handbook of Applied Hydrology. New York.

(61) SUGAWARA, M.
1961. ON THE ANALYSIS OF RUNOFF STRUCTURE ABOUT SEVERAL JAPANESE RIVERS. Jap. Jour. Geophys. 2(4): 1–76.

(62) ——— and MARUYAMA, F.
1957. A METHOD OF PREVISION OF THE RIVER DISCHARGE BY MEANS OF A RAINFALL MODEL. Symposia Darcy, Internatl. Assoc. Sci. Hydrol. Pub. 42, 3: 71–76. Dijon.

(63) TAYLOR, A. B., and SCHWARTZ, H. E.
1952. UNIT-HYDROGRAPH LAG AND PEAK FLOW RELATED TO BASIN CHARACTERISTICS. Amer. Geophys. Union Trans. 33(2): 235–246.

(64) TENNESSEE VALLEY AUTHORITY.
1964. BRADSHAW CREEK-ELK RIVER: A PILOT STUDY IN AREA-STREAM FACTOR CORRELATION. Off. Tributary Area Devlpmt. Res. Paper 4. Knoxville.

(65) TURNER, H. M., and BURDOIN, A. J.
1941. THE FLOOD HYDROGRAPH. Boston Soc. Civ. Engin. Jour. 28(3): 232–256.

(66) U.S. BUREAU OF RECLAMATION.
1949. FLOOD ROUTING, CH. 6.10. *In* Flood Hydrology. Part 6 of water studies, v. 4. U.S. Bur. Reclam. Manual. (Revised, 1951.)

(67) U.S. CORPS OF ENGINEERS.
1963. UNIT HYDROGRAPHS. PART 1: PRINCIPLES AND DETERMINATIONS. U.S. Engineer Office, Baltimore.

(68) U.S. SOIL CONSERVATION SERVICE.
1964. HYDROLOGY, SECTION LV. SCS Natl. Engin. Handbook Washington D.C. [This is a revision for use in watershed planning.]

(69) WILLIAMS, H. M.
1945. Discussion, MILITARY AIRFIELDS: DESIGN OF DRAINAGE FACILITIES, by G. A. Hathaway. Amer. Soc. Civ. Engin. Trans. 110: 820–826.

(70) WU, I-PAI.
1963. DESIGN HYDROGRAPHS FOR SMALL WATERSHEDS IN INDIANA. Amer. Soc. Civ. Engin., Jour. Hydraulics Div. 89(HY6): 35–66.

(71) ZOCH, R. T.
1934, 1936, 1937. ON THE RELATION BETWEEN RAINFALL AND STREAMFLOW. *In* U.S. Department of Commerce, Monthly Weather Review. Part I, v. 62: 315–322; part II, v. 64: 105–121; part III, v. 65: 135–147.

LECTURE 9: MATHEMATICAL SIMULATION OF SURFACE FLOW

As a result of the development of conceptual models in unit hydrograph theory, there has been a tendency since the mid-1960's to propose the use of conceptual models to represent specific elements of the hydrologic cycle other than the overall direct response of a catchment. The principles of mathematical physics can be applied to the investigation of various parts of the hydrologic cycle, and the individual processes can be represented by a set of equations and boundary conditions. To solve these equations, it is necessary to make further simplifying assumptions, which accentuate the simulation nature of the mathematical solutions obtained. The replacement of these simplified mathematical expressions by conceptual models is in accordance with the general systems approach, which considers each system in terms of a certain number of interconnected elements and judges a system by its overall operation rather than the precise nature of the elements themselves. Conceptual models are formulated on the basis of a simple arrangement of a relatively small number of elements, each of which is itself simple in operation. The most widely used conceptual elements are linear reservoirs and linear channels. Though conceptual models were originally introduced as highly simplified versions of the actual physical operations involved, they can also be looked upon as mathematical abstractions whose only function is to simulate the behavior of the physical systems being studied.

In the two final lectures, we discuss four segments of the hydrologic cycle that to some extent lend themselves to mathematical simulation and to the synthesis of conceptual models. The four segments involved are overland flow, open channel flow, unsaturated flow in soils, and ground water flow.

Overland Flow

Overland flow is an interesting example of the application of mathematical simulation and the possibility of applying conceptual models to the solution of a hydrologic problem. Overland flow has been studied analytically, in the laboratory, and in the field. It occurs early in the runoff cycle, and the inherent nonlinearity of the process is not dampened in any way. Hence, the methods of linear analysis and synthesis are inadequate in this case, and the general approach used in developing linear methods must be extended.

A physical picture of overland flow is shown in figure 9–1. The essential problem to be solved is to determine the flow off the plane at the downstream end for given physical conditions and a given pattern of lateral inflow along the plane. The equation of continuity for the two-dimensional lateral inflow

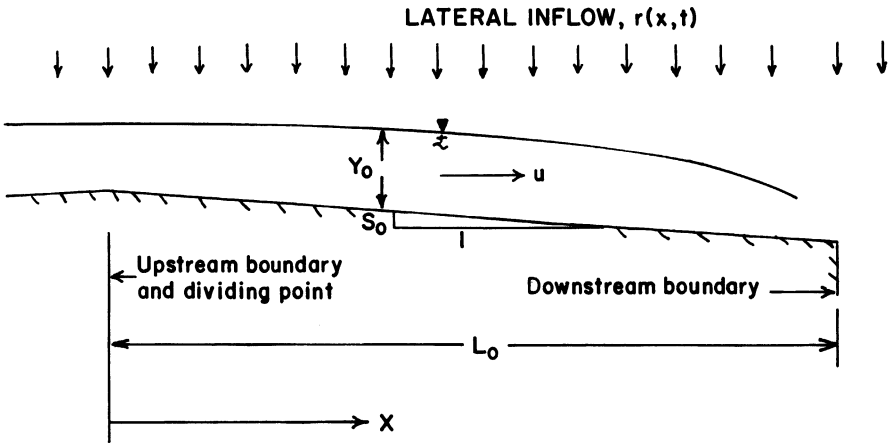

FIGURE 9–1.—Overland flow (two-dimensional).

problem can be written as:

$$\frac{\partial q}{\partial x}+\frac{\partial y}{\partial t}=r(x,t) \tag{1}$$

where

$q=q(x,t)$ = rate of overland flow per unit width

$y=y(x,t)$ = depth of overland flow

and

$r=r(x,t)$ = rate of lateral inflow per unit area.

The dynamic equation for two-dimensional overland flow can be written as:

$$\frac{1}{g}\frac{\partial u}{\partial t}+\frac{\partial y}{\partial x}+\frac{u}{g}\frac{\partial u}{\partial x}=S_0-S_f-\frac{q}{gy^2}\cdot r(x,t) \tag{2}$$

where

$u=u(x,t)$ = velocity of overland flow

S_0 = slope of plane

S_f = friction slope.

Though the continuity equation is linear in q and y, the dynamic equation is highly nonlinear. It is possible by means of a high-speed digital computer to obtain a numerical solution of equations 1 and 2 for any given set of boundary conditions. This approach will be considered briefly later in this section. For the present, however, we are concerned with the simpler approaches to the particular problem, that is, with the attempt to find a simple mathematical simulation or a simple conceptual model.

The classical problem of overland flow is to solve the particular case where the lateral inflow is uniform along the plane and takes the form of a unit step function:

$$r(x,t) = U(t) \tag{3}$$

There are several parts to the complete solution of this problem. Firstly, there is the steady-state problem of determining the equilibrium profile when the outflow at the downstream end of the plane is equal to the inflow over the surface of the plane. Secondly, there is the problem of determining the rising hydrograph of outflow before equilibrium for the special inflow case represented by equation 3 above. If the problem were a linear one, the solution of this second problem (that is, the determination of the step-function response) would be sufficient to characterize the response of the system, and the outflow hydrograph for any other inflow pattern could be derived from it. However, since the problem is inherently nonlinear, the principle of superposition cannot be applied, and each case of inflow must be treated on its merits. The third basic problem is that of determining the recession from the equilibrium condition after the cessation of long continued inflow. The nature of the recession when the inflow ceases before equilibrium is reached (that is, before the outflow builds up to a value equal to the inflow) must be investigated, and this constitutes a fourth basic problem. The next step is to investigate the effect of an inflow formed by the superposition of two or more step functions. Thus, the fifth basic problem involves consideration of the case where there is a sudden increase from one uniform rate of inflow to a second higher rate of uniform inflow. The sixth case considered is that when a uniform rate of inflow is suddenly changed to a second uniform rate of inflow which is smaller than the first.

A few of the classical experimental results by Izzard (*28*) are shown on figure 9–2. The top figure shows a rising hydrograph, a recession, a second rising hydrograph, and a final recession. The second figure shows the effect of changing the inflow rate from 1.83 to 3.55 in. per hr. (4.65 and 9.02 cm. per hr., respectively) and the lower diagram shows the effect of changing the inflow rate from 3.65 to 1.84 in. per hr. (9.27 and 4.67 cm. per hr., respectively). Also, shown in the figure is a logarithmic plot of the detention storage on the surface of the plane against the discharge at the downstream end.

The first approach to the solution of the overland flow problem in classical hydrology to be considered is that based on the replacement of the dynamic equation 2 by an assumed relationship between outflow and storage. Because this method was first proposed by Horton (*22*) for overland flow on natural catchments and subsequently used by Izzard (*28*) for paved surfaces, it may be referred to as the Horton-Izzard approach. Hydrologists noted that when the equilibrium runoff (that is, the equilibrium discharge at the downstream end) of a number of experimental plots was plotted against the average surface detention (or total surface detention) at equilibrium on log-log paper, the

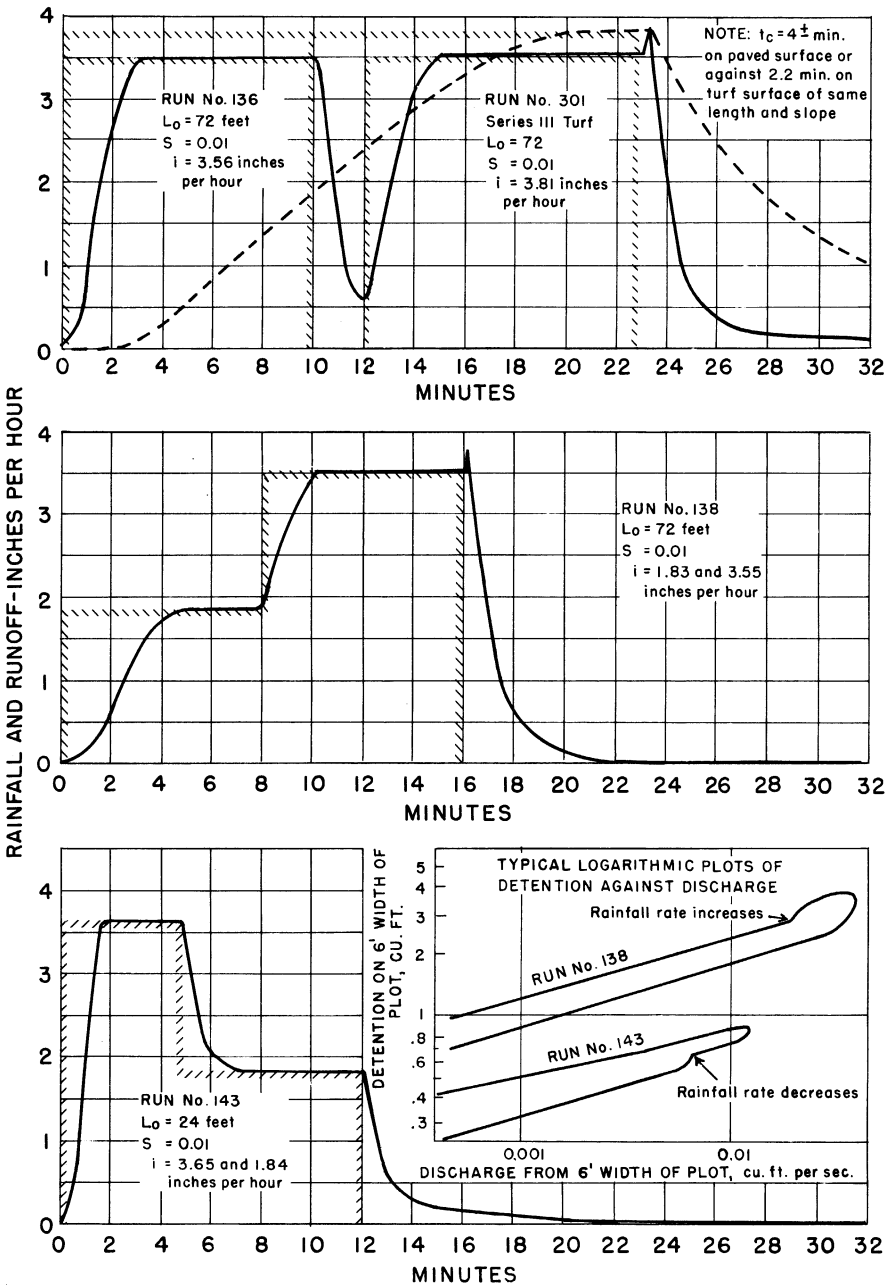

FIGURE 9–2.—Hydrograph of overland flow.

experimental points fell approximately along a straight line. An exact linear relationship on logarithmic paper would indicate that the equilibrium outflow at the downstream end and the equilibrium storage were connected as follows:

$$q(L,t_e)=q_e=aS_e^c \tag{4}$$

where q_e was the discharge at the downstream end of the plane under equilibrium conditions, S_e was the total surface storage at equilibrium conditions, and a and c were parameters.

In the Horton-Izzard approach to the overland flow problem, the assumption is made that such a power relationship holds not only at equilibrium, but also at any time during the rising hydrograph or during the recession. Using this assumption we can write:

$$q(L,t)=q_L=aS^c \tag{5}$$

where q_L is the discharge at the downstream end at any time and S is the corresponding total storage on the surface of the plane of overland flow. The equation of continuity, equation 2, can be written in the hydrological form as:

$$r\cdot L-q_L=\frac{dS}{dt} \tag{6}$$

which for our assumptions can be written as:

$$q_e-aS^c=\frac{dS}{dt} \tag{7a}$$

or

$$a\,dt=\frac{dS}{S_e^c-S^c} \tag{7b}$$

The solution of equation 7 is:

$$t=\frac{1}{aS_e^{c-1}}\int\frac{d(S/S_e)}{1-(S/S_e)^c} \tag{8a}$$

$$t=\frac{1}{(a)^{1/c}(q_e)^{(c-1)/c}}\int\frac{d(q/q_e)^{1/c}}{1-(q/q_e)} \tag{8b}$$

Equation 8 can be solved analytically for values of $c=1$ (linear), $c=2$, $c=3$, or $c=4$, and also for ratios of these values, that is, for $c=3/2$ or $4/3$.

Horton (*22*) solved the equation of the rising hydrograph due to a step function input for the case of $c=2$, which he described as "mixed flow" since the value c is intermediate between the value of $5/3$ for turbulent flow and the

value of 3 for laminar flow. Horton's solution may be written as:

$$\frac{q}{q_e}=\tanh^2\left(\frac{t}{K_e}\right) \tag{9a}$$

where

$$K_e=\frac{S_e}{q_e} \tag{9b}$$

Since the system is nonlinear, the time parameter K_e will depend on the intensity of inflow. Horton gave an empirical expression for the equilibrium storage per unit width and his equation for the rising hydrograph has been used in the design of airport drainage since that time. Izzard (*27*) presented the solution for the case of $c=3$ (that is, for laminar flow) in the form of a dimensionless rising hydrograph. Izzard used as his time parameter a time to virtual equilibrium, which is exactly twice the time parameter used in equation 9b above. It is of interest that the integral in equation 8 is of the same form as the Bakhmeteff varied flow function and, hence, tabulated values of the varied flow function may be used to tabulate or draw the rising hydrograph for any value of c for which it is tabulated. Typical rising hydrographs are shown on figure 9–3.

For recession from equilibrium, the recharge in equation 6 becomes zero, and the insertion of the value for q from equation 5 leads to the solution:

$$\left(\frac{q_e}{q}\right)^{(c-1)/c}=1+(c-1)\frac{t}{K_e} \tag{10}$$

where q is the ordinate of the recession curve and t is the time elapsed since the cessation of inflow, that is, the time since the start of recession. Typical recession curves as predicted by the Horton-Izzard model are shown in figure 9–3. The special case of equation 10 for the value of $c=3$ was given by Izzard.

If the duration of inflow (D) is less than the time required to reach virtual equilibrium, we get a partial recession from the value of the outflow (q_D) which has been reached at the end of the inflow. It can be easily shown that this curve is the same shape as for recession from equilibrium except that the recession flow enters the curve defined by equation 10 at the appropriate value of q_e/q_D.

If there is a change to a new rate of uniform inflow during the rising hydrograph, two cases can occur. If the new rate of inflow is higher than the rate of outflow when the change occurs, the same dimensionless rising hydrograph can still be used, but since q_e is equal to the inflow at equilibrium, the value of q/q_e will change as soon as the rate of inflow changes. If the new rate of inflow is less than the outflow when the change occurs, the hydrograph will correspond to the falling curve of the varied flow function. The latter function can be used to determine the shape of such a falling hydrograph, which will be of the type shown in the bottom of figure 9–2.

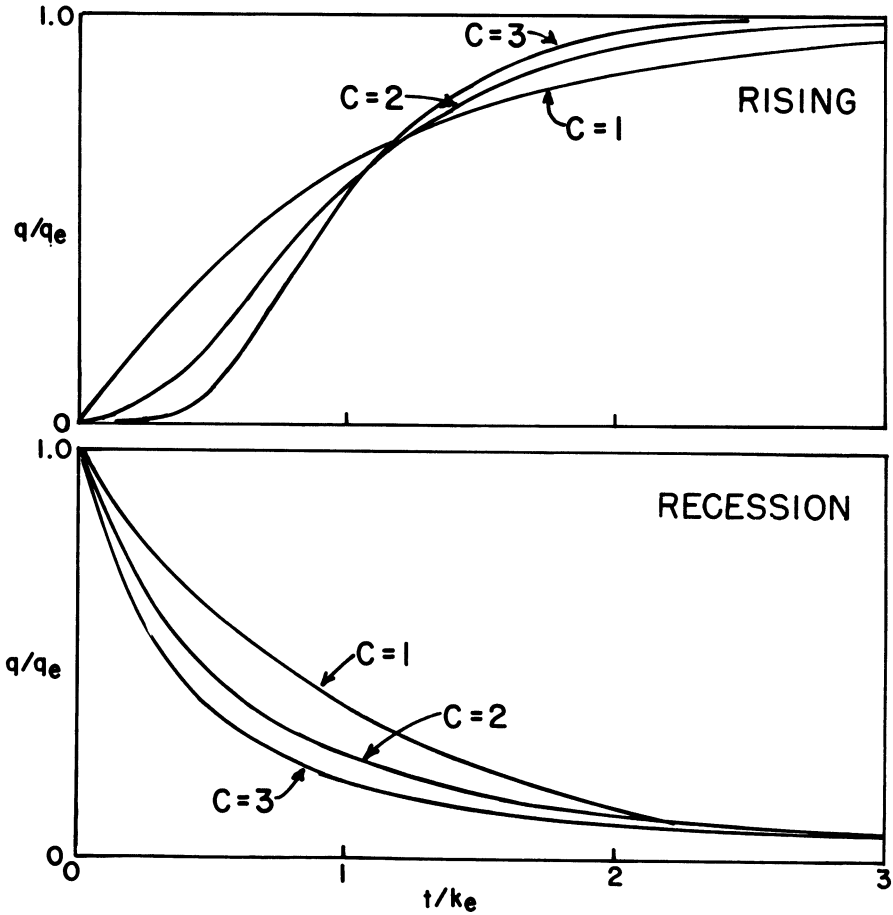

FIGURE 9–3.—Shapes of rising and recession hydrographs.

Looked at as a conceptual model, the Horton-Izzard solution clearly assumes that the whole system can be lumped together and treated as a single nonlinear reservoir whose outflow-storage relationship is given by equation 5. Even though this conceptual model is extremely simple in form, the fact that it is nonlinear makes it less easy to handle than some of the apparently complex conceptual models used to simulate linear or linearized systems. Thus, the impulse response for such a system no longer characterizes the system because the output will also depend on the form and intensity of the input. The cumulants of the impulse can no longer be added to the cumulants of the input to obtain the cumulants of the output. The solution for a step function input cannot be used to obtain the output for a complex pattern of input.

The second simple solution proposed for the overland flow problem is the kinematic wave solution. It also involves a power relationship between discharge and depth but, in this case, not a lumped relationship covering the whole system, but a relationship between the discharge and the depth at each point and, therefore, a distributed relationship. The basic assumption for the kinematic wave solution is that all the terms of dynamic equation 2 are negligible compared with the slope term and the friction term, so that we have:

$$S_0 - S_f = 0 \tag{11a}$$

which can also be written as:

$$q(x,t) = q = by^c \tag{11b}$$

If friction is taken according to the Chezy formula, the value c will be $3/2$; whereas, if it is taken according to the Manning formula, the value of c will be $5/3$. For zero initial conditions and an equilibrium discharge q_e (equal to the product of the constant supply rate r and the length of overland flow L), we have the following solution for the rising hydrograph:

$$t \leq t_k: \qquad \frac{q}{q_e} = \left(\frac{t}{t_k}\right)^c \tag{12a}$$

$$t \geq t_k: \qquad \frac{q}{q_e} = 1 \tag{12b}$$

where

$$t_k = \frac{L}{b^{1/c} q_e^{(c-1)/c}} = \frac{q_e^{1/c}}{b^{1/c} \cdot r} = \frac{y_e}{r} \tag{12c}$$

In equation 12, t_k is the kinematic time parameter and y_e is the depth of flow obtained when the equilibrium discharge q_e is substituted in equation 11b. The kinematic time parameter t_k should be distinguished from the time parameter for the Horton-Izzard model K_e defined by equation 9b above and from the time to equilibrium t_e used by Izzard. The rising hydrograph for the kinematic wave solution is shown on the upper part of figure 9–4.

The recession from full equilibrium for the kinematic solution can be shown to be:

$$\left(\frac{q_e}{q} - 1\right)\left(\frac{q}{q_e}\right)^{1/c} = c \cdot \frac{t}{t_k} \tag{13}$$

which is also shown on the upper part of figure 9–4. Where the duration of inflow (D) is less than the time of kinematic rise (t_k), the kinematic wave solution gives a flat topped hydrograph, in which the flow is constant until it meets the full recession curve as shown in the lower diagram on figure 9–4.

The kinematic wave solution has been applied to overland flow by Henderson

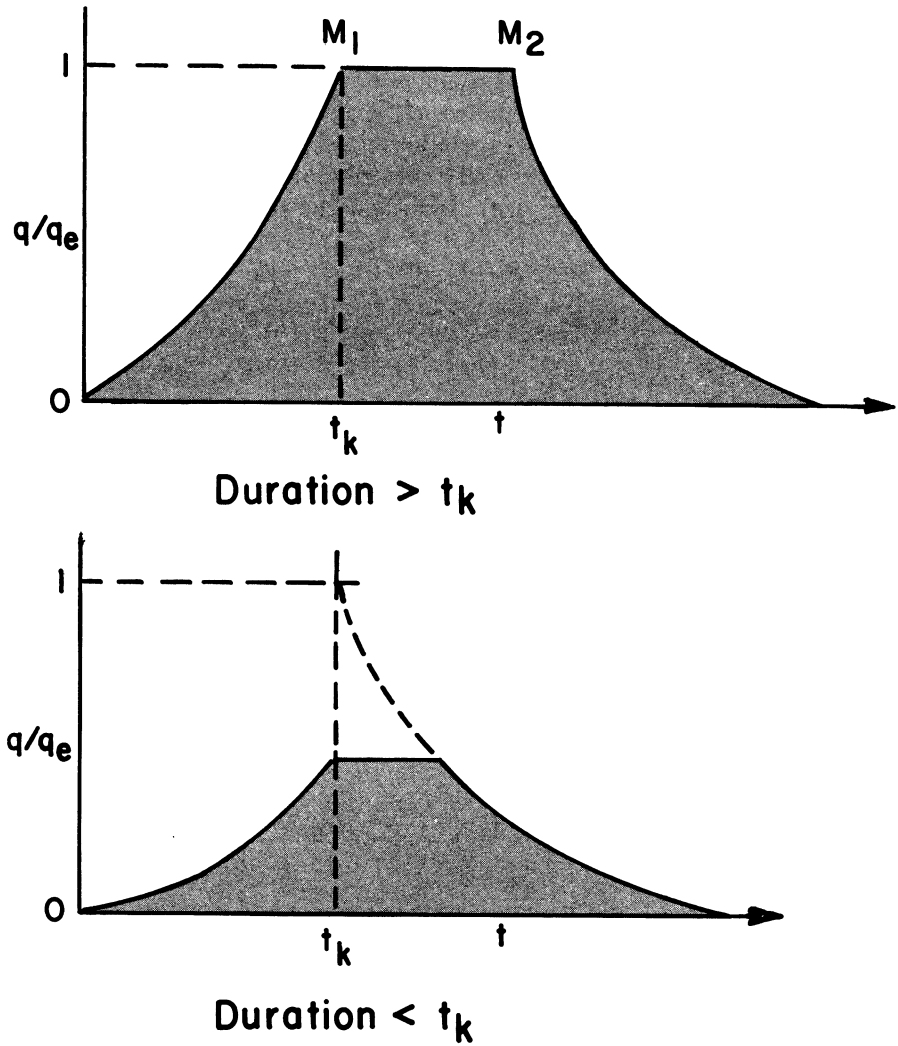

FIGURE 9–4.—Kinematic wave solution.

and Wooding (*21*), and Wooding (*60, 61, 62*) and used to construct a model of catchment response. They analyzed the problem and developed equations for the rising hydrograph and falling hydrograph by arguments based on the method of characteristics.

The numerical solution of the overland flow problem has been tackled by Woolhiser and Liggett (*63*). They reduced the equations of continuity and momentum to dimensionless forms by expressing the variables in terms of the

normal depth and velocity at the downstream end of the plane for the maximum discharge. When this is done (see reference *63* for details), equations 1 and 2 become:

$$\frac{\partial q}{\partial x}+\frac{\partial y}{\partial t}=1 \tag{14}$$

$$\frac{\partial u}{\partial t}+\frac{1}{F^2}\frac{\partial y}{\partial x}+\frac{u\partial u}{\partial x}=K\left(1-\frac{u^2}{y}\right)-\frac{u}{y} \tag{15a}$$

where

$$K=\frac{S_0L}{F^2y_0} \tag{15b}$$

in which the superscripts denoting that the variables are dimensionless variables have been omitted for convenience. There are only two parameters in these equations, the Froude number for normal flow at maximum discharge (F) and the parameter K defined by equation 15b, which reflects the length and slope of the plane (or channel) as well as the normal flow variables. Equations 14 and 15 were expressed in characteristic form and solved by a finite difference technique. For high values of K, the slope and friction dominated the flow and, as might be expected in these conditions, the solution approximated the kinematic wave solution. For values of the parameter K smaller than 10, the kinematic wave solution was found to be a poor approximation.

A typical rising hydrograph found by Woolhiser and Liggett (*60*) is shown on figure 9–5. It would appear that in the early stages of the rising hydrograph, the shape of the hydrograph approximates to the kinematic solution, whereas in the later stages it approximates more to the Horton-Izzard solution. This is not unexpected because in the early stages of the flow dq/dx would be relatively small, thus approximating the kinematic solution for which dq/dx is zero downstream of the characteristic which starts from the upstream end of the plane at the start of inflow. In the later stages of the rising hydrograph, the value of dq/dx would approach the rate of lateral inflow and the Horton-Izzard solution, based on an empirical relationship which is a good approximation at equilibrium, might be expected to give better predictions than the kinematic model.

In simulating overland flow, either as a hydrologic system or as a subsystem of a watershed, consideration should be given to the type of flow involved. The Stanford model incorporates a rising hydrograph for overland flow developed by Morgali and Linsley (*49*). Their hydrograph is for a high value of K and hence approximates very closely to the kinematic solution. For lower values of K, this rising hydrograph would not necessarily be a good representation of overland flow.

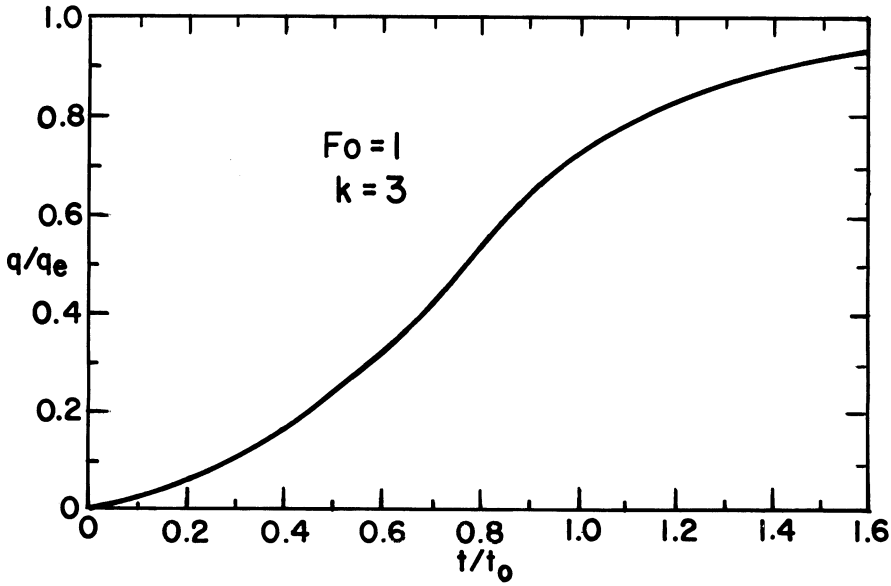

FIGURE 9–5.—Comparison of rising hydrograph.

Dooge (*9*, *10*) recently proposed as a conceptual model for problems with lateral inflow a cascade of equal reservoirs, either linear or nonlinear, with intermediate inflow. For overland flow, these reservoirs would be nonlinear. This conceptual model is what the author has referred to as uniform nonlinearity. In such cases it can be shown that the outflow hydrograph for uniform inflow can be represented in dimensionless form by:

$$\frac{q}{q_e}=\phi\left(\frac{t}{t_0},\frac{D}{t_0}\right) \tag{16a}$$

where q is the outflow, q_e the equilibrium outflow, t the time, t_0 a characteristic time which depends on the intensity of inflow, and D the duration of uniform inflow. For a step function input, there is no duration to affect the issue and the equation of the rising hydrograph can be written as:

$$\frac{q}{q_e}=\phi\left(\frac{t}{t_0}\right) \tag{16b}$$

It can be shown that the outflow from a cascade of equal nonlinear reservoirs is of the form indicated by equation 16b. Dooge (*10*) has shown that the cumulative outflows measured by Amorocho and Orlob (*2*) for pulse inputs to a laboratory catchment (which was nonlinear in behavior) can be plotted as a single line when a characteristic time based on the intensity of inflow is used

for dimensionless plotting. In the same paper, Dooge showed that the wide variations in the unit hydrographs derived by Minshall (*47*) can be enormously reduced by the same type of plotting.

A comparison of equations 8 and 9 with equation 16b indicates that the Horton-Izzard model belongs to the class of uniformly nonlinear models with K_e as the characteristic time. Similarly, a comparison of equations 12 and 13 with equation 16 indicates that the kinematic model also belongs to this class with the t_k as the characteristic time. As already pointed out, the Horton-Izzard solution represents the special case of one nonlinear reservoir. The kinematic wave solution for the linear case, can be approximated by a cascade of linear reservoirs in which the product of the number of reservoirs and the individual storage delay time remains finite as the number of reservoirs tends to infinity. From these considerations, it is plausible to suggest that it might be possible to simulate satisfactorily the hydrographs generated by Woolhiser and Liggett—which are intermediate between the kinematic solution and the Horton-Izzard solution—by a cascade consisting of a finite number of equal nonlinear storage elements.

Unsteady Flow in Open Channels

The problem of predicting the discharge hydrograph at a downstream point on the basis of the hydraulic properties of the channel and a known discharge at an upstream point is a classical problem in hydrology. The various methods proposed for its solution can be reviewed in the recent bibliography by Yevjevich (*64*). The equation of continuity for unsteady flow in open channels without lateral inflow is given by:

$$\frac{\partial Q}{\partial x}+\frac{\partial A}{\partial t}=0 \tag{17a}$$

where Q is the discharge and A the area of flow. The above is the form in which the continuity equation at a section is written in open channel hydraulics. Hydrologists more frequently write the continuity equation in the lumped form obtained by integrating equation 17a over a channel reach, thus obtaining the hydrologic equation:

$$I-O=\frac{dS}{dt} \tag{17b}$$

where I is the inflow to the reach; O, the outflow from the reach; and S, the storage in the reach at a given time. In open channel hydraulics, the dynamic equation is written as:

$$\frac{\partial y}{\partial x}+\frac{u}{g}\frac{\partial u}{\partial x}+\frac{1}{g}\frac{\partial u}{\partial t}=S_0-S_f \tag{18a}$$

The corresponding equation in hydrology is the equation for the looped

rating curve:

$$Q=CA\sqrt{R}\left(S_0-\frac{\partial y}{\partial x}-\frac{u}{g}\frac{\partial u}{\partial x}-\frac{1}{g}\frac{\partial u}{\partial t}\right) \tag{18b}$$

where R is the hydraulic mean radius and C is the Chezy friction factor, which may be evaluated from a friction formula such as the Manning equation. Equations 17a and 18a reflect the hydraulic approach to the problem of unsteady flow in an open channel, while equations 17b and 18b reflect the hydrologic approach to the same problem. These two separate approaches have developed independently of one another. A systematic approach to the problem, however, enables us to reconcile the two.

Various methods have been used for the solution of the hydraulic formulation of the problem of routing a flood down an open channel. Mathematical methods can be used to find solutions for simplified versions of equations 17a and 18a.

If we wish to go beyond these idealized mathematical formulations, it is necessary to use numerical methods. The recasting of the equations in terms of characteristic variables facilitates such numerical solution. Even before the advent of high-speed digital computers, numerical solutions were obtained in this way. The advent of the computer, however, has greatly facilitated the numerical solution of the problem. The method of characteristics is still used in some numerical approaches to the problem; in others, either an explicit or an implicit finite difference scheme using a rectangular network is used. In explicit schemes, serious problems of stability may arise, whereas in implicit schemes the storage capacity required to solve the resulting simultaneous equations is a limiting factor.

In the hydrologic approach to the solution of the routing problem, the continuity equation 17b is retained and the dynamic equation 18b replaced by some simplifying relation. The methods most commonly used in applied hydrology for flood routing are the Muskingum method of McCarthy,[1] the lag and route method of Meyer (*46*), the diffusion analogy of Hayami (*18*), and the successive routing method of Kalinin and Milyukov (*30*). These are all linear methods, and thus, in practice, the channel reach is assumed to be linear with constant parameter values or else is linearized and a relationship found between the parameter values and the level of either inflow or outflow.

Since we are interested in a solution at one particular downstream location, we do not need to know conditions at all intermediate points. A systems approach would therefore seem to be more appropriate than a complete

---

[1] McCarthy, G. T. THE UNIT HYDROGRAPH AND FLOOD ROUTING. Unpublished paper presented at the Conference of North Atlantic Div., U.S. Corps of Engineers, Providence, R.I. 1939.

numerical solution, which generates unwanted solutions at intermediate points. However, our present systems techniques in hydrology are such that if we wish to use a systems approach we must confine ourselves to the linearized version of the problem. Recent studies have been made involving the complete linearized solution to the equations of continuity and momentum for two-dimensional flow in a uniform channel, (*11*, *16*). This approach, in fact, applies to the flood routing problem the same assumptions that are made in unit hydrograph theory for the more complex problem of catchment response. It is remarkable that in the past 25 years, during which the unit hydrograph approach has been widely used, no corresponding attempt has been made to treat a channel as a linear system.

If we confine ourselves to the case of a semi-infinite uniform wide rectangular chnanel, without lateral inflow, for which the friction effect can be represented by the Chezy formula, we can write equations 17a and 18a as:

$$\frac{\partial q}{\partial x}+\frac{\partial y}{\partial t}=0 \tag{19}$$

$$\frac{\partial y}{\partial x}+\frac{u}{g}\frac{\partial u}{\partial x}+\frac{1}{g}\frac{\partial u}{\partial t}=S_0-\frac{q^2}{C^2y^3} \tag{20}$$

The boundary conditions to be satisfied are the initial conditions determined by an initial uniform flow throughout the length of the channel and an upstream boundary condition determined by the inflow hydrograph at the upstream end. Though the equation of continuity (equation 19) is linear in q and y, the dynamic equation (equation 20) is highly nonlinear.

If we consider a small perturbation about the steady discharge q_0, then we can write the following equation for the perturbation of discharge (q) from this reference value q_0:

$$(gy_0-u_0^2)\frac{\partial^2 q}{\partial x^2}-2u_0\frac{\partial^2 q}{\partial x\partial t}-\frac{\partial^2 q}{\partial t^2}=3gS_0\frac{\partial q}{\partial x}+2gS_0\frac{\partial q}{\partial t} \tag{21}$$

in which the coefficients have been frozen at the values corresponding to the reference discharge (q_0). The above linearization was proposed by Deymie (*7*) who also derived the solution given in equation 29. The work of Deymie and of Masse (*45*) published in 1938 was not followed up, and the linearization given in equation 21 and the solution given in equation 29 were developed independently by Dooge[2] in 1965.

Strictly speaking, equation 21 is only valid for perturbations small enough that the variation coefficients in the nonlinear equation is not sufficient to

---

[2] DOOGE, J. C. I. LINEAR ANALYSIS OF FLOW IN OPEN CHANNELS. Unpublished memorandum, Univ. Col., Cork, Ireland. 1965.

affect the result. If we follow the unit hydrograph approach and ignore the fact that large perturbations give rise to nonlinear behavior, we can apply equation 21 to large perturbations and accept the solution of this linearized equation as an approximation to the solution of the original nonlinear problem. How good an approximation it will be can only be determined for a given case by comparing this complete linear solution with the complete nonlinear solution. The fact that linear routing methods have been used in applied hydrology would indicate that the effect of linearization cannot be so catastrophic as to make linear methods worthless. The complete solution of the linearized hydraulic equation 21 has the advantage that it can be used as a standard against which to measure the simple linear models used in applied hydrology. Indeed, the latter can be considered as attempts to simulate the complete linear solution.

Since equation 21 is linear, it is only necessary to determine the solution for a delta function input. For any other inflow, it is only necessary to convolute the impulse response with the actual inflow. For convenience, the impulse response of a channel obtained from equation 21 will be referred to as the linear channel response (LCR).

If the original independent variables (x,t) are replaced by the characteristic directions (m and n) and the dependent variable (q) is replaced by a new transformed dependent variable (z), the equation can be written in the more compact form:

$$\frac{\partial^2 z}{\partial m \partial n} - h^2 z = 0 \tag{22a}$$

where

$$q = z \cdot \exp(-rt + sx) \tag{22b}$$

$$m = t - \frac{x}{c_1} \tag{22c}$$

$$n = t - \frac{x}{c_2} \tag{22d}$$

where c_1 and c_2 are the characteristic wave velocities and r and s are parameters defined in terms of the channel parameters (*11*). Though equation 22a is more compact in form than equation 21, it is no easier to solve since the simpler form of the equation is counterbalanced by the fact that the boundary conditions are not as convenient when expressed in terms of m and n as they are when expressed in terms of x and t.

Any of the standard mathematical techniques can be used for the solution of either form of the equation, but it is probably more convenient in each case to use Laplace transform methods. When this is done in terms of x and t,

the Laplace transform of the impulse response or LCR is found to be[3] as follows:

$$H(s)=\exp[-x\sqrt{as^2+bs+c}+exs+fx] \tag{23}$$

where a, b, c, e, and f are parameters depending on the hydraulic characteristics of the channel.

Since the Laplace transform of the LCR is of exponential form, the cumulants can be determined by repeated differentiation of the quantity inside the square brackets in equation 23 and evaluated at $s=0$. This process is complicated by the continual occurrence of indeterminate forms which have to be evaluated by L'Hopital's Rule. When this is done and the values of the parameters a, b, c, e, and f are substituted, it is possible to write the cumulants as follows:

$$k_1=U_1'=\frac{x}{1.5u_0} \tag{24a}$$

$$k_2=U_2=\frac{2}{3}\left(1-\frac{F^2}{4}\right)\left(\frac{y_0}{S_0x}\right)\left(\frac{x}{1.5u_0}\right)^2 \tag{24b}$$

$$k_3=U_3=\frac{4}{3}\left(1-\frac{F^2}{4}\right)\left(1+\frac{F^2}{2}\right)\left(\frac{y_0}{S_0x}\right)^2\left(\frac{x}{1.5u_0}\right)^3 \tag{24c}$$

$$k_4=U_4-3(U_2)^2=\frac{40}{9}\left(1-\frac{F^2}{4}\right)\left(1+\frac{11}{20}F^2+\frac{1}{4}F^4\right)\left(\frac{y_0}{S_0x}\right)^3\left(\frac{x}{1.5u_0}\right)^4 \tag{24d}$$

The result for the lag given by equation 24a indicates that for the linearized solution, the average rate of propagation of the flood wave is 1.5 times the velocity corresponding to the reference discharge. This corresponds to the value indicated by the Kleitz-Seddon Law (*32, 55*) for the celerity of a flood wave in a wide rectangular channel with Chezy friction:

$$c=\frac{\partial Q}{\partial A}=\frac{\partial q}{\partial y}=\tfrac{3}{2}ay^{1/2}=1.5u \tag{25}$$

The higher cumulants can be made dimensionless by dividing by the appropriate power of the lag.

It can be readily seen from equation 24 that the resulting dimensionless cumulants or shape factors are functions of the Froude Number and the

---

[3] DOOGE, J. C. I. LINEAR THEORY OF OPEN CHANNEL FLOW: I-COMPLETE LINEAR SOLUTION OF ROUTING PROBLEM. Unpublished memorandum, Univ. Col., Cork, Ireland. 1967.

dimensionless length parameter (S_0x/y) of the following form:

$$S_R = \phi_R(F)\,(D)^{1-R} \text{ for } R=2, 3 \ldots\ldots \tag{26a}$$

where

$$D = \frac{S_0 x}{y_0} \tag{26b}$$

Consequently, even if we were unable to invert the transformed function given by equation 23, it would still be possible to determine the cumulants of the solution and to plot the solution for any given value of F on a shape factor diagram.

The inversion of equation 23 gives a solution in the original (x,t) coordinates consisting of two terms:

$$q(x,t) = q_1 + q_2 \tag{27}$$

where q_1 represents the head of the wave and q_2, the body of the wave. The term representing the head of the wave is of the following form:

$$q_1 = \delta\left(t - \frac{x}{c_1}\right)\exp(-px) \tag{28a}$$

where

$$p = \frac{2-F}{F+F^2}\cdot\frac{S_0}{2y_0} \tag{28b}$$

It can be seen that the head of the wave moves downstream at the dynamic wave speed c_1 in the form of a delta function of exponentially declining volume. The body of the wave has the form:

$$q_2 = h\left(\frac{x}{c_1} - \frac{x}{c_2}\right)\exp(-rt+sx)\,\frac{I_1[2ha]}{a}\,U\left(t - \frac{x}{c_1}\right) \tag{29a}$$

where

$$I_1[2ha] = \text{modified Bessel function} \tag{29b}$$

and

$$a = \sqrt{\left(t - \frac{x}{c_1}\right)\left(t - \frac{x}{c_2}\right)} \tag{29c}$$

$$U[t] = \text{unit step function} \tag{29d}$$

c_1 and c_2 are the dynamic wave velocities, and r, s, and h are parameters depending on the hydraulic properties of the channel (*11*).

The shape of the body of the wave for $F=0.5$ and various values of the dimensionless length factor D are shown on figure 9–6. For short lengths, the impulse response declines monotonically; for intermediate lengths, the impulse response is a unimodal curve with an appreciable initial ordinate. For long channels, the unimodal shape of response rises from an initial ordinate which

is practically zero and declines again to zero. For other values of the Froude number (F), the same three shapes are obtained, though the values of the dimensionless length parameters at which a change in shape occurs increases with the Froude number.

Figure 9–6 is plotted in dimensionless terms—qt_0/V versus t/t_0—and hence, gives the erroneous impression that the peak is increasing as the flood wave moves downstream. This is due to the fact that the time of travel in a reach (t_0) increases with distance. The variation of the downstream discharge with length of channel is shown in real terms on figure 9–7. This shows the result of

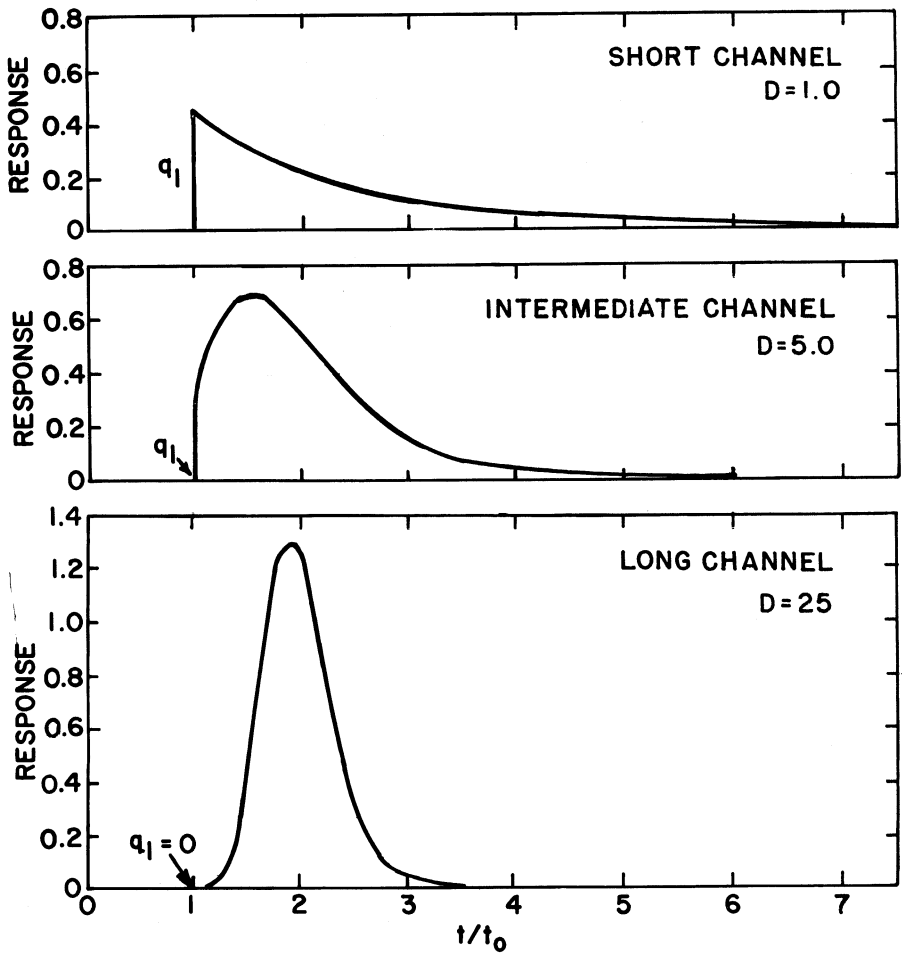

FIGURE 9–6.—Shape of impulse response.

computations for a channel with the steady state rating curve:

$$q_0 = 50 y_0^{3/2} \tag{30}$$

and for an inflow given by:

$$I(t) = 125 - 75 \cos\left(\frac{\pi t}{48}\right) \qquad 0 < t < 96 \tag{31}$$

which corresponds to the inflow used by Thomas (*57*) in his classical paper on unsteady flow in open channels. The figure shows the modification of the flood wave for distances up to 500 miles (805 km.).

For any linearization of the routing problem, it is necessary to choose a value of the reference discharge (q_0) about which the discharge is perturbed. Since this value of q_0 is used to evaluate y_0 from equation 30 and hence u_0 and the coefficients in equation 21, it will naturally affect the result. The effect of the choice of reference discharge on the outflow at 50 miles (80.5 km.) for an inflow given by equation 31 is shown on figure 9–8.

The inflow varies from 50 cubic feet per second per foot (4.65 m³/sec./m.) width to 200 c.f.s. per foot (18.6 m³/sec./m.) width and the reference discharge is taken at values of 50 (4.65 m³), 100 (9.3 m³), 150 (13.9 m³) and 200 (18.6 m³) c.f.s. per foot width. It can be seen from figure 9–8 that for the smaller values of the reference discharge, the flood wave is displaced in time and occurs later as would be expected from equation 24a. It is interesting

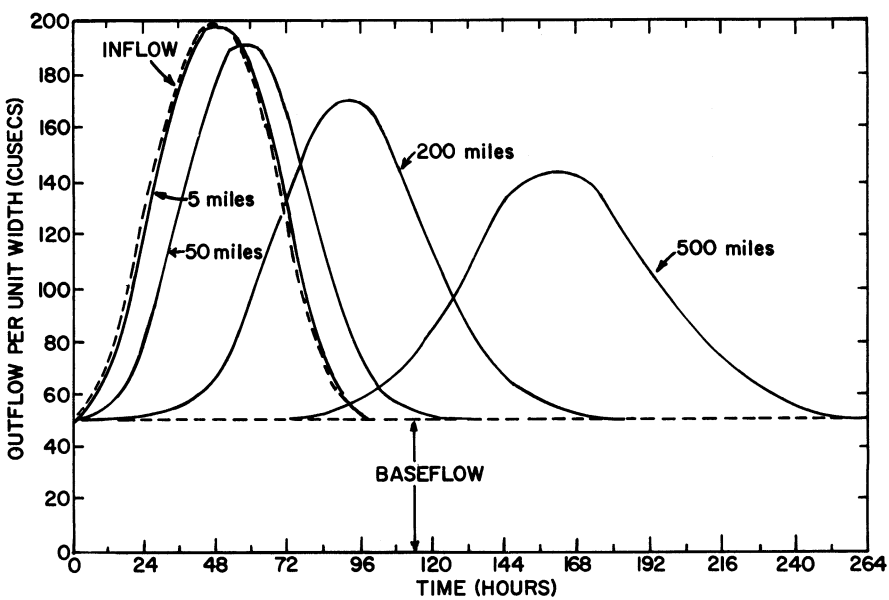

FIGURE 9–7.—Variation of outflow with distance.

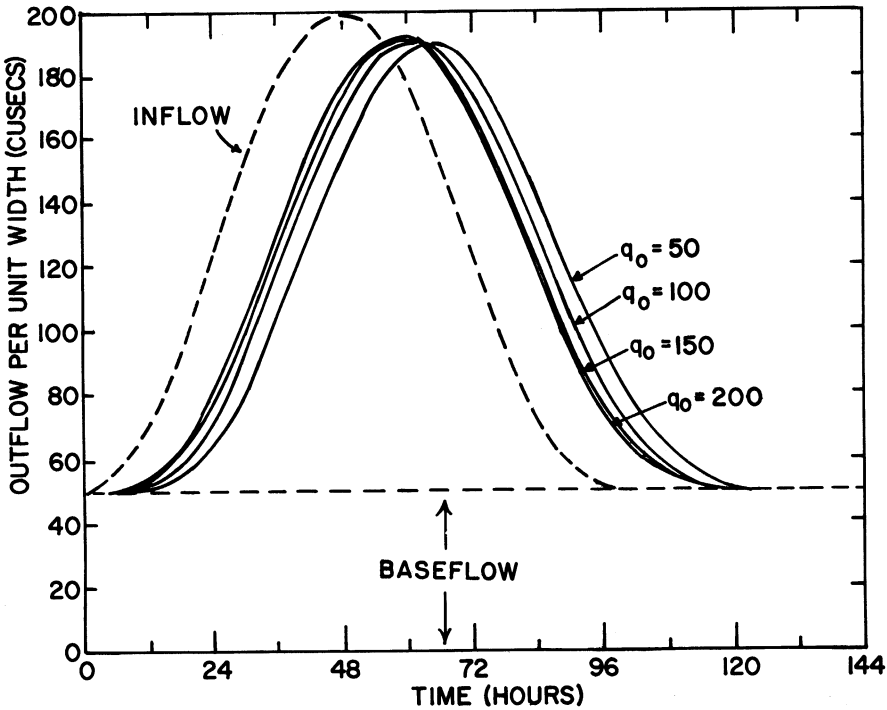

FIGURE 9–8.—Effect of reference discharge.

to note, however, that the shape of the flood wave for the various reference discharges is very similar.

For a channel whose rating curve is given by equation 30, that is, one with Chezy friction, the Froude number is independent of the depth of flow and hence, the value of the second cumulant given by equation 24b is independent of the reference discharge. Since the second cumulant of the outflow is equal to the second cumulant of the inflow plus the second cumulant of the LCR, the second cumulant of the outflow will, for a case of Chezy friction, be independent of the reference discharge chosen. The reference discharge will affect the third and fourth cumulants, but these may be small compared to the third and fourth cumulants of the inflow. In any case, the third and fourth cumulants do not have as marked an effect on the shape as the first and second cumulants.

Having obtained the complete linear solution of the hydraulic equations, it is now possible to compare the various special linear hydrologic solutions with it and determine the accuracy with which they can simulate the complete solution and the range within which they apply. This was done by the method of moment matching, which is most convenient in this connection. The

results were checked by the method of least squares. Nine linear models were studied and may be grouped as shown below:

One-parameter models:
- dynamic wave equation
- kinematic wave equation

Two-parameter models:
- diffusion analogy
- Muskingum method
- lag and route method
- Kalinin-Milyukov method

Three-parameter models:
- diffusion plus lag
- multiple Muskingum method
- three-parameter gamma distribution.

Of most interest are the two-parameter models which have been used as practical channel routing methods in applied hydrology.

The complete linear solution is a three-parameter system. If expressed in dimensionless form, the dimensionless discharge can be formulated as a function of a dimensionless time parameter, a dimensionless length parameter, and the Froude number. It may appear pointless to attempt to simulate the three-parameter complete linear solution by another three-parameter system which, at best, will be an approximation to it. However, the complete linear solution is complex in form and relatively difficult to compute; if it can be approximated with a sufficient degree of accuracy by another three-parameter system which is easier to comprehend and easier to compute, then the simulation may be more convenient than the use of the original mathematical solution.

A one-parameter simulation will plot as single point on a shape factor diagram. Hence, it can hardly be expected to simulate a three-parameter system which plots as a family of lines. Nevertheless, its ability to simulate flood routing may be tested by comparing the first moment of the one-parameter model with the first moment of the complete linear solution given by equation 24a. If the two terms on the right-hand side of equation 20 are neglected, that is, the difference between bed slope and friction slope is assumed to be negligible compared to the other terms, then we obtain the classical linear wave solution. For a delta function input at the upstream end, this solution is a delta function traveling down the channel at a velocity equal to the dynamic wave speed $(c_1 = u_0 + \sqrt{gy_0})$. The problem is only properly posed for Froude numbers less than one. For such cases, the dynamic wave speed is greater than 1.5 u_0, which is the average speed of translation as given by equation 24a.

Alternatively, if all the terms on the left-hand side of equation 20—or, what is the same thing, the terms on the left-hand side of equation 21—are neglected, then we get the linear kinematic wave solution. This is equivalent to assuming that the dynamic equation may be used in the simplified form

appropriate to steady uniform flow, that is, that the effects due to changing depth and velocity are negligible compared to the effects of slope and friction. In this case, the solution is also a translation without distortion, but this time at the speed $1.5u_0$ so that the linear kinematic wave solution is a one-parameter model which has exactly the same lag as the complete solution.

Most of the flood routing methods used in applied hydrology are two-parameter models. If the second and third terms on the left-hand side of equation 21 are expressed in terms of the second derivative with respect to distance on the basis of the linear kinematic wave solution (which is a first approximation to the solution), then the equation becomes:

$$\left(gy_0-\frac{u_0^2}{4}\right)\frac{\partial^2 q}{\partial x^2}=3gS_0\frac{\partial q}{\partial x}+\frac{2gS_0}{u_0}\frac{\partial q}{\partial t} \tag{32}$$

which is a parabolic equation in contrast to the original equation 21 which was a hyperbolic equation.

The parabolic solution (or diffusion analogy, or convective-diffusion solution) obtained from equation 32 may be shown to be identical to the complete solution for the special case of the Froude number equal to zero and may also be shown to have the same first and second moments as the complete solution for any value of F. While it is preferable to think of this solution as a parabolic approximation to the complete solution, equation 32 may be considered as a convective-diffusion equation in which the "convective velocity" is given by:

$$a=1.5u_0 \tag{33a}$$

and the "hydraulic diffusivity" is given by:

$$D=\frac{q_0}{2S_0}\left(1-\frac{F^2}{4}\right) \tag{33b}$$

Hydraulic diffusivity must not be taken to mean that the physical process involved is one of diffusion. For the parabolic solution (or diffusion analogy), the linear channel response is given by:

$$h(t)=\frac{x}{\sqrt{4\pi Dt^3}}\cdot\exp\left[-\frac{(x-at)^2}{4Dt}\right] \tag{34}$$

The cumulants for this response can be determined from the general equation for the Rth cumulant which is:

$$k_R=\{(1)(3)(5)\ldots\ldots(2R-3)\}\left(\frac{2D}{ax}\right)^{R-1}\left(\frac{x}{a}\right)^R \tag{35}$$

Substitution of the value a from equation 33a and the value of D from equation 33b in equation 35 gives expressions for the cumulants in terms comparable to those used in equation 24 on page 373. When this is done, it is seen

that the cumulants given by equation 35 are the same as those indicated by equation 24 for the special case of $F=0$.

The other special models used in applied hydrology can also be compared to the complete linear solution. The Muskingum method of flood routing is based on the assumption that in a reach:

$$S=K[XI+(1-X)O] \tag{36a}$$

which can be combined with the continuity equation to give:

$$O+K(1-X)\frac{dO}{dt}=I-KX\frac{dI}{dt} \tag{36b}$$

The linear system represented by the above equation can be shown to have the impulse response:

$$h(t)=\frac{\exp[-[t/K(1-X)]]}{K(1-X)^2}-\left(\frac{X}{1-X}\right)\delta(O) \tag{37}$$

The delta function term in equation 37 indicates the possibility of the occurrence of negative ordinates in the outflow unless the inflow is such as to enable the contribution of the first term to the convoluted outflow to counteract the effect of the second term. The cumulants of the Muskingum solution can be shown to be:

$$k_1=U_1'=K \tag{38a}$$

$$k_2=U_2=(1-2X)K^2 \tag{38b}$$

$$k_3=U_3'=2(1-3X+3X^2)K^3 \tag{38c}$$

$$k_4=U_4-3(U_2)^2=6(1-4X+6X^2-4X^3)K^4 \tag{38d}$$

The parameters of the Muskingum model can be optimized by equating the first and second cumulants given above to the first and second cumulants of the complete linear solution. This results in the values:

$$K=\frac{x}{1.5u_0} \tag{39a}$$

and

$$X=\frac{1}{2}-\frac{1}{3}\left(1-\frac{F^2}{4}\right)\left(\frac{y_0}{S_0x}\right) \tag{39b}$$

In a uniform channel, we can determine the optimum values of the parameters for the Muskingum method by using equation 39 provided we know the optimum reference discharge and the properties of the channel. For nonuniform channels, the first and second moments of the impulse response can

be got by subtracting the moments of the inflow from the corresponding moments of the outflow: the value of K is equal to the first moment and X can be obtained from equation 38b once K is known. This would seem to be a more objective procedure than the attempt to transform a looped storage curve to a straight line by taking trial values of X. It will be noted from equation 39b that for certain short distances the value of X will be negative. From the point of view of classical hydrology which views X as a measure of the amount of wedge storage present, this appears physically unreasonable. From the point of view of mathematical matching, the negative value of X is the correct value to use.

The lag and route method (*46*) assumes that the storage at any time may be taken as proportional to the outflow which occurs after the elapse of a time lag (τ) so that we can write:

$$S(t) = K \cdot O(t+\tau) \tag{40a}$$

which can be combined with the continuity equation to give:

$$O(t) + K \cdot \frac{d}{dt} O(t+\tau) = I(t) \tag{40b}$$

This model has the system response:

$$t<\tau: \qquad h(t) = 0 \tag{41a}$$

$$t>\tau: \qquad h(t) = \frac{1}{K} \exp\left[-\left(\frac{t-\tau}{K}\right)\right] \tag{41b}$$

The cumulants of the lag and route model may be readily derived either from its Laplace transform or by taking moments about the origin and using them to find the cumulants. The values are:

$$R=1: \qquad k_1 = \mathrm{K} + \tau \tag{42a}$$

$$R>1: \qquad k_R = (R-1)!K^R \tag{42b}$$

The values of K and τ which are optimal in the moment matching sense can be obtained by equating the first two moments of the response to the first two moments for the complete linear solution. This results in the values:

$$K = \frac{x}{1.5u_0}\left[\frac{2}{3}\left(1-\frac{F^2}{4}\right)\left(\frac{y_0}{S_0 x}\right)\right] \tag{43a}$$

$$\tau = \frac{x}{1.5u_0}\left[1-\frac{2}{3}\left(1-\frac{F^2}{4}\right)\left(\frac{y_0}{S_0 x}\right)\right] \tag{43b}$$

As in the Muskingum model, one of the parameters may take on "unrealistic" values. This may happen since the value τ given by equation 43b may be negative for short lengths of channel. Again it must be emphasized that this

unrealistic parameter value gives the best fit according to the chosen criteria and should be used if closeness of prediction is required. The element of unreality lies in the choice of this particular model for short channel lengths and the assumption that the crude hydrologic reasoning on which it is based will result in the optimum parameters performing the same function as they do in the crude model.

The use of successive routing through a characteristic reach was proposed by Kalinin and Milyukov (*30*) in 1957. This is the same model as the cascade model used to represent the unit hydrograph. It was proposed for channel routing by Kalinin and Milyukov on the basis of a linearization of the unsteady flow equation. The impulse response function of the model is given by the gamma distribution:

$$h(t)=\frac{(t/k)^{n-1}}{k\cdot\Gamma(n)}\cdot\exp\left(-\frac{t}{k}\right) \tag{44}$$

whose cumulants are given by:

$$K_R=n(R-1)!K^R \tag{45}$$

As has been pointed out in dealing with conceptual models of the unit hydrograph, though the conceptual model is based on the idea of a cascade in which the value n would be integral, nonintegral values of n may be used to fit the model to prototype data. The Kalinin-Milyukov model, like the other models discussed in this section, can be used as a linearized model. The parameters though taken as constant for a given flood event, or part of a given flood event, can be varied with the intensity of inflow to allow for nonlinear effects.

By matching the first and second moments given by equation 45 to the first and second moments of the complete linear solution, the following optimal values for the parameters K and n are obtained.

$$K=\frac{4}{9}\left(1-\frac{F^2}{4}\right)\left(\frac{y_0}{S_0u_0}\right) \tag{46a}$$

$$n=\left(\frac{6}{4-F^2}\right)\left(\frac{S_0x}{y_0}\right) \tag{46b}$$

The parameter K is the time-constant for a single linear reservoir of the cascade. If the average rate of travel of the flood wave (which is $1.5u_0$) is used to convert this characteristic time to a characteristic length we obtain:

$$L=\frac{2}{3}\left(1-\frac{F^2}{4}\right)\left(\frac{y_0}{S_0}\right)=\left(1-\frac{F^2}{4}\right)\frac{q_0}{S_0\cdot(\partial q_0/\partial y_0)} \tag{46c}$$

which is identical with the formula for the characteristic length proposed by Kalinin and Milyukov (*30*) except for the factor $(1-F^2/4)$.

The shape factor diagram s_3/s_2 for the complete linear solution and the classical flood routing methods is shown on figure 9–9. The complete solution plots as a family of parabolas, and the diffusion analogy coincides with the curve for $F=0$. From equation 26, it can be seen that the higher the dimensionless length (D), the lower will be the value of s_2 and the other shape factors and vice versa. Thus, we can deduce from figure 9–9 that for short lengths (high s_2), the various two-parameter models other than the diffusion analogy would appear to be about equal in their ability to simulate the complete linear solution. For long lengths (small s_2), however, the Muskingum method is seen to have a value of s_3 approaching 0.5, whereas the complete linear solution (for all Froude numbers) and the other models all have values of s_3 approaching zero. We would deduce from this divergence that for long lengths of channel, the Muskingum method would not simulate the outflow hydrograph as well as the other methods. That this is so is shown by figure 9–10, which gives the predicted outflow for the complete solution (for $q_0=150$ c.f.s. or 4.25 m^3. per sec.) and the different models for the Thomas input defined by equation 31 and a channel length of 500 miles (805 km.).

The parabolic method and the Kalinin-Milyukov (*30*) method predict discharges which are graphically indistinguishable from the complete linear solution. The lag and route method predicts the travel time to a fair degree of accuracy, but underestimates the degree of attenuation. The Muskingum method is seen to predict negative ordinates for the first 60 hours and a peak discharge which is about 20 percent too high and whose time-to-peak is about 50 percent too small. It can be verified that for the short channel lengths the Muskingum method performs as satisfactorily as the other methods. The complete failure of the Muskingum method for the case shown on figure 9–10 is due to the fact that the time-to-peak of the resulting hydrograph is greater than the time of inflow, whereas the Muskingum outflow must decline as soon as inflow stops. As a rule of thumb, this suggests that the Muskingum method will fail if the lag of the channel reach is greater than about half the duration of inflow.

The ability of the three-parameter models to simulate the complete linear solution can be similarly analyzed.[4] As might be expected, the three-parameter models are better able to simulate the three-parameter complete solution. Figure 9–11 shows a plotting on a s_4-s_2 shape factor diagram of the complete linear solution for a Froude number of 0.5 and the lines for each of the three-parameter models for the same Froude number. The closeness of the lines on

---

[4] HARLEY, B. M. LINEAR THEORY OF FLOOD ROUTING. M. Engin. Sci. Thesis. Natl. Univ. Ireland. 1967.

the shape factor diagram suggests that the actual hydrographs would be very similar. In fact, it is not possible to distinguish the solutions when plotted in hydrograph form at an ordinary scale.

The manner of variation of the three parameters in each of the models—which result from the matching of the first three moments to the first three

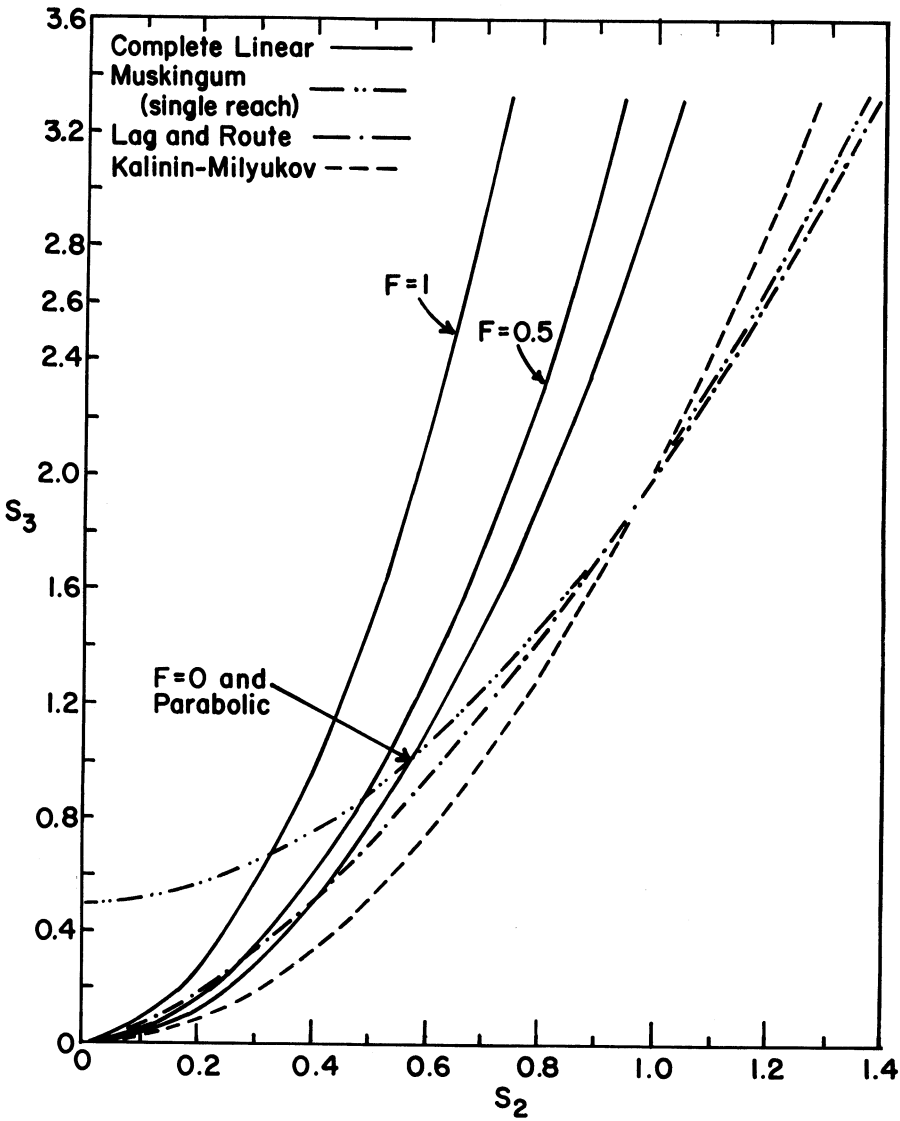

FIGURE 9–9.—Shape factor diagram.

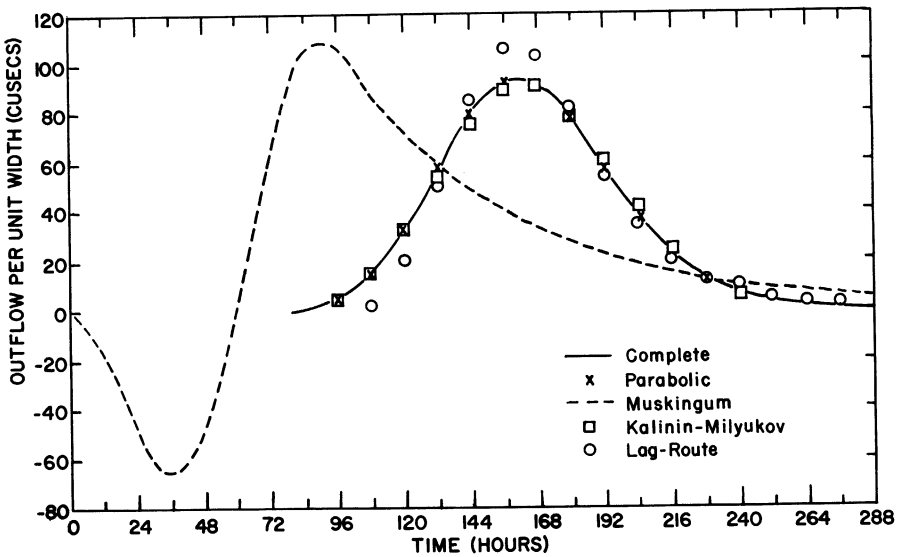

FIGURE 9–10.—Simulation by two-parameter models.

moments of the complete linear solution—shows some interesting features. In the case of the diffusion plus lag model, a change in the length of channel considered does not result in any change in the value of the convective velocity (a) or the "hydraulic diffusivity" (D), but the third parameter, the lag (τ), varies in order to maintain the optimum solution and is directly proportional to the length of channel. In the case of the three-parameter gamma model, the reservoir lag time K remains constant as in the two-parameter Kalinin-Milyukov model, but both the number of reaches (n) and the lag of the linear channel (τ) vary directly with the length to maintain similarity with the complete linear solution. In the case of the multiple Muskingum model, the values of K and X are independent of the reach length and the complete linear solution is matched by using a number of Muskingum reaches which is proportional to the length. The conclusions given above are developed on the basis of long reaches of channel and might not hold for short reaches.

The general approach described above can also be applied to a channel with lateral inflow.[5] Treatment of this case is outside the scope of these lectures. It may be said, however, that the derivation of the complete linear solution in lateral inflow is more complex than the one given above. It should be noted that the linear response obtained is in fact the IUH for a uniform channel.

[5] O'MEARA, W. LINEAR ROUTING OF LATERAL INFLOW IN UNIFORM OPEN CHANNELS. M. Engin. Sci. Thesis, Dept. Civ. Engin., Univ. Coll., Cork, Ireland. 1968.

It is interesting to note that one of the models which is most successful in simulating the complete solution, particularly for Froude numbers approaching 1, is the model consisting of a rectangle routed through a linear storage element. In fact, this model is the Zoch-Clark model of routing the time-area-concentration curve through a linear reservoir.

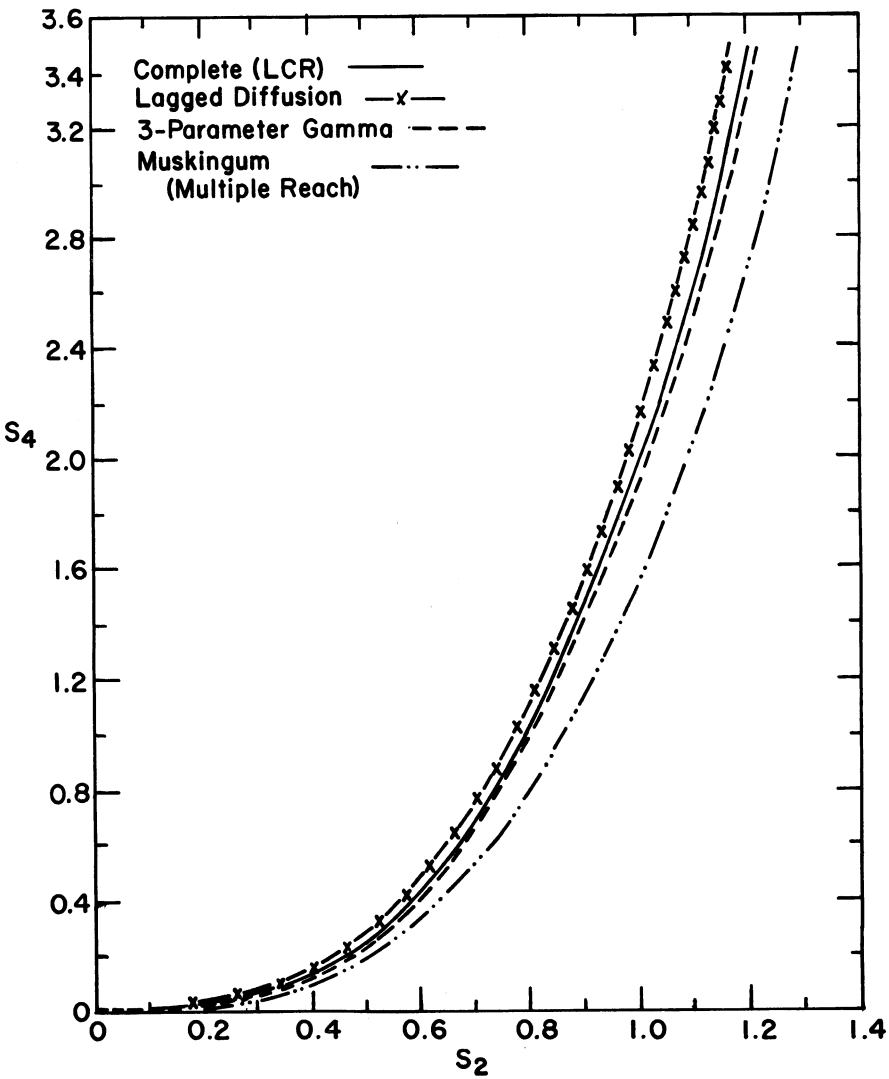

FIGURE 9–11.—Shape factor diagram for three-parameter model ($F=0.5$).

Problems on Surface Flow

1. Calculate the steady state profile for overland flow from a plane 80 feet long at a slope of 1 in a 1,000 with Chezy coefficient of 100 ft.$^{1/2}$/sec. and a lateral inflow of 0.001 feet per second. Draw both the profile and the velocity distribution along the length of the plane. How would the result be affected by the neglect of the various terms in the basic dynamic equation?

2. Compare the Horton-Izzard solution and the kinematic wave solution. What is the relationship between the time to equilibrium in the two methods?

3. Compare the various methods proposed for the numerical solution of the equation for unsteady overland flow. Based on the different methods, what difficulties in computation would you expect?

4. Determine the rising hydrograph and the falling hydrograph by the Horton-Izzard method for the data given in Appendix table 12.

5. Determine the rising hydrograph and the recession hydrograph for the kinematic wave solution for data in Appendix table 12.

6. Determine the rising hydrograph and the recession hydrograph by a method of numerical computation for the data in Appendix table 12.

7. Fit a Horton-Izzard type solution to the data for the data in Appendix table 13.

8. Fit a kinematic wave solution to the data in Appendix table 13.

9. A wide rectangular channel has a bottom slope, S_0, of 3 feet per mile (0.57 m. per km), a length of 200 miles (322 km.), and Chezy friction with a C of 50. Find the discharge hydrograph at the downstream end, using the method of characteristics if the inflow per unit width is given by function 5 of Appendix table 1.

10. Use a finite difference scheme, either implicit or explicit, to solve problem 1.

11. Discuss the question of the stability of the solutions obtained by finite difference methods for unsteady flow in open channels.

12. Find the linear channel response of the given channel for this particular flood event from the given inflow and from the outflow computed in either problem 1 or problem 2.

13. Find the linear channel response for the data of inflow and outflow given in Appendix table 10.

14. Derive the form of the linear channel response for the following classical methods of flood routing: lag and route, Muskingum method, Kalinin-Milyukov method.

15. What basic physical assumptions are made for the three classical methods of flood routing mentioned in problem 6.

16. For the inflow and outflow hydrographs given in Appendix table 10, find the best value of the lag and the routing coefficient to handle this flood event by the lag and route method. Draw the linear channel response for these parameter values.

17. For the inflow and outflow hydrographs given by Appendix table 10, find the values of K and X for handling this flood event by the Muskingum method. Draw the linear channel response for these particular values.

18. For the inflow and outflow hydrograph given in Appendix table 10, find the value of n and k to handle this flood event by the Kalinin-Milyukov method. Draw the linear channel response for these parameter values.

19. Derive the expressions for the cumulants of the complete linear solution given in equation 24, page 000.

20. It has been suggested that apart from the effect on lag, a change in the reference discharge produces only a very small change in the shape of the outflow hydrograph. Would you expect this change in shape to be greater where the inflow is a gamma distribution or where the inflow is a cosine curve?

21. What other models, besides those mentioned in the lecture, might be used to simulate the linear channel response? Indicate a one-parameter model, a two-parameter model, and a three-parameter model which might have been used. Calculate the cumulants of these models.

22. In this lecture, the moments and cumulants have been used as a criterion of matching. Discuss the significance of this criterion, and indicate what other criteria might have been used and what difference this would have made to the computations.

23. Using function 5 on Appendix table 1 as the inflow, compute the outflow hydrograph in a wide rectangular channel for different values of S_0, C, and L.

24. For the corresponding inflow and channel characteristics used in problem 23, compute the parameters of a two-parameter simulation model and generate the simulated hydrograph.

25. For the inflow pattern in the channel of problem 23, compute the parameters of a three-parameter simulation model and compute the simulated hydrograph.

26. From a series of results of problems 23, 24, and 25, draw up rough working rules for the circumstances under which each of the models are valid.

Literature Cited

(1) Abbott, M. B.
1966. AN INTRODUCTION TO THE METHOD OF CHARACTERISTICS. 243 pp. London.

(2) Amorocho, J. and Orlob, G. T.
1961. NONLINEAR ANALYSIS OF HYDROLOGIC SYSTEMS. Water Resources Center Contrib. 40, 147 pp., illus. University of California, Berkeley.

(3) Behlke, C. E.
1957. THE MECHANICS OF OVERLAND FLOW. Ph.D. Thesis. Stanford University, Calif.

(4) Brakensiek, D. L.
1966. HYDRODYNAMICS OF OVERLAND FLOW AND NONPRISMATIC CHANNELS. Amer. Soc. Agr. Engin. Trans. 9(1): 119–122.

(5) CHEMERENKO, E. P.
1966. PRIMENENIYE ELEKTRONNOI VICHISLITELNOI MASHINI VO BREMYA GIDROLICHESKI VICHESLENII [USE OF ELECTRONIC COMPUTERS DURING HYDROLOGICAL CALCULATIONS]. Meteorologiya i Gidrologiya Zhuzurnal. Leningrad.

(6) CHOW, VEN TE.
1959. OPEN-CHANNEL HYDRAULICS. 680 pp., illus. New York.

(7) DEYMIE, P.
1939. PROPAGATION D'UNE INTUMESCENCE ALLONGEE (PROBLEM AVAL) [PROPAGATION OF AN ELONGATED INTUMESCENCE]. Proc. 5th Internatl. Cong. Appl. Mech., pp. 537–544. New York.

(8) DOOGE, J. C. I.
1960. THE ROUTING OF GROUNDWATER RECHARGE THROUGH TYPICAL ELEMENTS OF LINEAR STORAGE. Commission on Subterranean Waters, General Assembly of Helsinki. Internatl. Assoc. Sci. Hydrol. Pub. 52: 286–300.

(9) ———
1967. A NEW APPROACH TO NONLINEAR PROBLEMS IN SURFACE WATER HYDROLOGY. Commission on Surface Waters, General Assembly of Berne. Internatl. Assoc. Sci. Hydrol. Pub. 76: 409–413.

(10) ———
CONCEPTUAL MODELS OF SURFACE RUNOFF. International Symposium on Floods, Their Prediction and the Defence of the Soil. Accademia Nazionale di Lincie. Rome. (In press.)

(11) ——— and HARLEY, B. M.
1967. LINEAR ROUTING IN UNIFORM OPEN CHANNELS. Internatl. Hydrol. Symposium. V. 1: 57–63, Compt. Rend. Fort Collins, Colo.

(12) DRONKERS, J. J.
1964. TIDAL COMPUTATIONS IN RIVERS AND COASTAL WATERS. 518 pp. Amsterdam.

(13) ESCOFFIER, E. F.
1965. ROUTING FLOOD WAVES ON THE APALACHICOLA RIVER. Internatl. Assoc. Hydraulic Res. XIth Internatl. Cong. Paper 3.38. Leningrad.

(14) FORSYTHE, G. E., and WASOW, W. R.
1960. FINITE DIFFERENCE METHODS FOR PARTIAL DIFFERENTIAL EQUATIONS. 444 pp. New York.

(15) GILCREST, B. R.
1950. FLOOD ROUTING. Chapter X, 42 pp. *In* Rouse, H. R., ed., Engineering Hydraulics. New York.

(16) HARLEY, B. M., and DOOGE, J. C. I.
1968. PROBLEMS IN SIMULATING AND EVALUATING VARIOUS METHODS OF LINEAR FLOOD ROUTING USING A SMALL DIGITAL COMPUTER. Tucson International Symposium on the use of analog and digital computers in hydrology. Internatl. Assoc. Sci. Hydrol. Pub. 81: 417–425.

(17) HATHAWAY, G. A.
1945. MILITARY AIRFIELDS; A SYMPOSIUM—DESIGN OF DRAINAGE FACILITIES. Amer. Soc. Civ. Engin. Trans. 110: 697–733.

(18) HAYAMI, S.
1951. ON THE PROPAGATION OF FLOOD WAVES. Disaster Prevention Res. Inst. Bul. 1: 1–16. Kyoto University, Japan.

(19) HENDERSON, F. M.
1963. FLOOD WAVES IN PRISMATIC CHANNELS. Amer. Soc. Civ. Engin. Trans., Jour. Hydraulics Div. 89(HY-4): 39–67.

(20) ———
1966. OPEN CHANNEL FLOW. 522 pp., illus. New York.

(21) ——— and WOODING, R. A.
1964. OVERLAND FLOW AND INTERFLOW FROM A LIMITED RAINFALL OF FINITE DURATION. Jour. Geophys. Res. 69(8): 1531–1540.

(22) HORTON, R. E.
1938. THE INTERPRETATION AND APPLICATION OF RUNOFF PLOT EXPERIMENTS WITH REFERENCE TO SOIL EROSION PROBLEMS. Soil Sci. Soc. Amer. Proc. 3: 340–349.

(23) ———
1940. AN APPROACH TOWARD A PHYSICAL INTERPRETATION OF INFILTRATION CAPACITY. Soil Sci. Soc. Amer. Proc. 5: 399–417.

(24) HUGGINS, L. F. and MONKE, E. J.
1966. THE MATHEMATICAL SIMULATION OF THE HYDROLOGY OF SMALL WATERSHEDS. Water Resources Res. Center Tech. Rpt. 1, 130 pp. Purdue University, Lafayette, Ind.

(25) ISAACSON, E. J., STOKER, J. J. and TROESCH, B. A.
1958. NUMERICAL SOLUTION OF FLOW PROBLEMS IN RIVERS. Amer. Soc. Civ. Engin., Jour. Hydraulics Div. 84(HY-5): part 1, 1–18.

(26) IWAGAKI, Y.
1951. THEORY OF FLOW ON ROAD SURFACES. Kyoto Univ. Col. Engin. Mem. 13(3): 139.

(27) IZZARD, C. F.
1944. THE SURFACE-PROFILE OF OVERLAND FLOW. Amer. Geophys. Union Trans. 25(6): 959–968.

(28) ———
1946. HYDRAULICS OF RUNOFF FROM DEVELOPED SURFACES. Highway Res. Bd. (Washington, D.C.) Proc. 26: 129–146.

(29) KALININ, G. P., and KUCHMENT, L. S.
1963. THE USE OF INFLUENCE FUNCTIONS FOR COMPUTING A DISCHARGE HYDROGRAPH. Berkeley Symposium of Surface Waters. Internatl. Assoc. Sci. Hydrol. Pub. 63: 77–89.

(30) ——— and MILYUKOV, P. I.
1957. O RASCHETE NEUSTANOVIVSHEGOSYA DVIZHENIYA VODY V OTKRYTYKH RUSLAKH [ON THE COMPUTATION OF UNSTEADY FLOW IN OPEN CHANNELS]. Meteorologiya i Gidrologiya Zhuzurnal 10: 10–18. Leningrad.

(31) KEULEGAN, G. H.
1944. SPATIALLY VARIABLE DISCHARGE OVER A SLOPING PLANE. Amer. Geophys. Union Trans. 25(6): 956–968.

(32) KLEITZ, C.
1877. SUR LA THEORIE DU NON-PERMANENT DES LIQUIDES ET SUR SON APPLICATION A LA PROPAGATION DES CRUES DES RIVIERES [ON THE THEORY OF UNSTEADY FLOW OF LIQUIDS AND ON ITS APPLICATION TO THE PROPAGATION OF RIVER FLOODS]. Pont et Chaussees Annales (France), sem. 2, No. 48: 133–196.

(33) KUCHMENT, L. S.
1964. OBOBSHCHENNAYA FORMOOLA DLYA RASCHETA GIDROGRAFA STOKA [A GENERALIZED FORMULA FOR THE CALCULATION OF THE DISCHARGE HYDROGRAPH]. Central Forecasting Unit Trans. (TsIP) 133: 23. Moscow. Translation NLLST RTS 3355, Boston Spa, Yorkshire, Sept. 1966.

(34) ———
1965. GIDROLOGICHESKIE PROGNOZI C PRIMENENIEN ELEKTRONSIK VICHISLITELNIK MASHIN [HYDROLOGIC PREDICTION USING AN ELECTRONIC COMPUTER]. Central Forecasting Unit Trans. (TsIP) 141. Moscow.

(35) KULANDAISWAMY, V. C.
1966. A NOTE ON MUSKINGUM METHOD OF FLOOD ROUTING. Jour. Hydrol. 4(3): 273–276.

(36) LAURENSON, E. M.
1959. STORAGE ANALYSIS AND FLOOD ROUTING IN LONG RIVER REACHES. Jour. Geophys. Res. 64: 2423–2431.

(37) ———
1962. HYDROGRAPH SYNTHESIS BY RUNOFF ROUTING. Water Res. Lab. Rpt. 66. University of New South Wales, Sydney.

(38) LIGGETT, J. A.
1959. UNSTEADY OPEN CHANNEL FLOW WITH LATERAL INFLOW. Dept. Civ. Engin. Tech. Rpt. 2. Stanford University, Calif.

(39) ———
1961. GENERAL SOLUTION FOR OPEN CHANNEL PROFILES. Amer. Soc. Civ. Engin., Jour. Hydraulics Div. 87(HY6): 89.

(40) ——— and WOOLHISER, D. A.
1967. DIFFERENCE SOLUTION OF THE SHALLOW WATER EQUATIONS. Amer. Soc. Civ. Engin., Jour. Engin. Mech. Div. 93(EM-2): 39–71.

(41) LIGHTHILL, M. J., and WHITHAM, G. B.
1955. ON KINEMATIC WAVES: PART I—FLOOD MOVEMENT IN LONG RIVERS. Roy. Soc. (London) Proc., Ser. A 229(1178): 281–316.

(42) LIN, PIN-NAM.
1952. NUMERICAL ANALYSIS OF CONTINUOUS UNSTEADY FLOW IN OPEN CHANNELS. Amer. Geophys. Union 33(2): 226–234.

(43) MCCOOL, D. K., GWINN, W. R. and REE, W. O.
1966. SPATIALLY VARIED STEADY FLOW IN A VEGETATED CHANNEL. Amer. Soc. Agr. Engin. Trans. 9(3): 440–444.

(44) MASSAU, J.
1900. MEMOIRE SUR L'INTEGRATION GRAPHIQUE DES EQUATIONS AUX DERIVEES PARTIELLES [REPORT ON THE GRAPHIC INTEGRATION OF THE EQUATIONS OF PARTIAL DERIVATIVES]. Annales de l'association des Ingenieurs Sortis des Ecoles Speciales de Gand, 23: 95–214. Translated by H. J. Putnam, Rocky Mountain Hydraulics Lab., Allenspark, Colo.

(45) MASSE, P.
1939. RECHERCHES SUR LA THEORIE DES EAUX COURANTES [RESEARCHES ON THE THEORY OF WATER CURRENTS]. Proc. 5th Internatl. Cong. Appl. Mech., pp. 545–549. New York.

(46) MEYER, O. H.
1941. SIMPLIFIED FLOOD ROUTING. Civ. Engin. 11(5): 306–307.

(47) MINSHALL, N. E.
1960. PREDICTING STORM RUNOFF FROM SMALL EXPERIMENTAL WATERSHEDS. Amer. Soc. Civ. Engin., Jour. Hydraulics Div. 86(HY-8).

(48) MORGALI, J. R.
1963. HYDRAULIC BEHAVIOUR OF SMALL DRAINAGE BASINS. Tech. Rpt. 30, 115 pp. Dept. Civ. Engin., Stanford University, Calif.

(49) ——— and LINSLEY, R. K.
1965. COMPUTER ANALYSIS OF OVERLAND FLOW. Amer. Soc. Civ. Engin., Jour. Hydraulics Div. 91(HY-3): 81–100.

(50) NASH, J. E.
1959. A NOTE ON THE MUSKINGUM FLOOD ROUTING METHODS. Jour. Geophys. Res. 64(8): 1053.

(51) PAYNTER, H. M.
1952. METHODS AND RESULTS FROM MIT STUDIES IN UNSTEADY FLOW. Boston Soc. Civ. Engin. Jour. 39(2): 120–165.

(52) RAGAN, R. M.
1966. LABORATORY EVALUATION OF A NUMERICAL FLOOD ROUTING TECHNIQUE FOR CHANNELS SUBJECT TO LATERAL INFLOWS. Water Resources Res. 2(1): 111–121.

(53) RICHTMYER, R. D.
1957. DIFFERENCE METHODS FOR INITIAL-VALUE PROBLEMS. 239 pp. New York.

(54) SCHONFELD, J. C.
1951. PROPAGATION OF TIDES AND SIMILAR WAVES. Rijkswaterstaat. The Hague.

(55) SEDDON, A. J.
1900. RIVER HYDRAULICS. Amer. Soc. Civ. Engin. Trans. 43: 179–243.

(56) STOKER, J. J.
1957. WATER WAVES: THE MATH THEORY WITH APPLICATIONS. V. IV, PURE AND APPLIED MATH. 567 pp. New York.

(57) THOMAS, H. A., SR.
1934. THE HYDRAULICS OF FLOOD MOVEMENTS IN RIVERS. Carnegie Inst. Tech. (Pittsburgh) Engin. Bul., pp. 1–70.

(58) VASILIEV, O. F. and others.
1964. A NUMERICAL METHOD FOR CALCULATING THE PROPAGATION OF LINEAR WAVES IN OPEN CHANNELS. Akad. Nauk, Leningrad, Dok. 8(7).

(59) WOO, D. C. and BRATER, E. F.
1962. SPATIALLY VARIED FLOW FROM CONTROLLED RAINFALL. Amer. Soc. Civ. Engin., Jour. Hydraulics Div. 88(HY-6): part 1, 31–56.

(60) WOODING, R. A.
1965a. A HYDRAULIC MODEL FOR THE CATCHMENT-STREAM PROBLEM. PART I: KINEMATIC WAVE THEORY. Jour. Hydrol. 3: 254–267.

(61) ———
1965b. A HYDRAULIC MODEL FOR THE CATCHMENT-STREAM PROBLEM. PART II: NUMERICAL SOLUTIONS. Jour. Hydrol. 3: 268–282.

(62) ———
1966. A HYDRAULIC MODEL FOR THE CATCHMENT-STREAM PROBLEM. PART III: COMPARISON WITH RUNOFF OBSERVATIONS. Jour. Hydrol. 4: 21–37.

(63) WOOLHISER, D. A., and LIGGETT, J. A.
1967. UNSTEADY, ONE-DIMENSIONAL FLOW OVER A PLANE—THE RISING HYDROGRAPH. Water Resources Res. 3(3): 753–771.

(64) YEVDJEVICH, V. M.
1964. BIBLIOGRAPHY AND DISCUSSION OF FLOOD ROUTING METHODS AND UNSTEADY FLOW IN CHANNELS. U.S. Geol. Survey Water-Supply Paper 1690, 235 pp.

(65) YU, Y. S., and MCNOWN, J. S.
1964. RUNOFF FROM IMPERVIOUS SURFACES. Jour. Hydraulics Res. 2(1): 3.

LECTURE 10: CONCEPTUAL MODELS OF SUBSURFACE FLOW

Lecture 9 dealt with mathematical simulation and conceptual models for flow processes that constitute part of the direct catchment response to inflow. It was concerned, therefore, with the simulation of processes contributing to the formation of the unit hydrograph, which is required either as the direct storm response or as part of the simulation of the total catchment response. The remaining two subsystems shown on figure 7–6 are the soil-water response system and the ground water response system.

The treatment of these two phases of subsurface flow is similar to that for overland flow and channel flow in the last lecture. In each case, the basic equations derived from the physics of unsaturated and saturated flow in porous media will be given, together with an account of the more important solutions based on simplified versions of the fundamental equations. A brief description will then be given of how conceptual models may be used to simulate these portions of the hydrologic cycle. It has been mentioned previously that the soil phase is the subsystem of the hydrologic cycle in which the least systems work has been done. Only in recent years has any work of this type been done in regard to ground water flow. Consequently, the present lecture will be largely concerned with a review of the theoretical and empirical relationships which have been proposed and which are necessary as a background to the tackling of the problem from a systems viewpoint.

Movement of Soil Moisture

In considering the soil phase of the hydrologic cycle, we are concerned with the rate and amount of infiltration into the soil through surface entry, the rate and amount of downward percolation from the surface to the water table, the amount of soil moisture held in storage, and the rate and amount of depletion of soil moisture storage either by evaporation at the surface of the soil or by transpiration through plants. Infiltration is probably the most important of these processes since it controls the extent to which total precipitation becomes effective as an input to the system representing the rapid response of the catchment. Physical information on infiltration is available from laboratory experiments, field results in infiltrometers, analysis of recorded hydrographs, and the computation of watershed indicators of equivalent rates of infiltration.

Any theory of infiltration must be grounded on the principles of soil physics (*1*, *5*). The water in unsaturated soil is held against gravity mainly by the action of soil suction. The curve showing the relationship between soil suction and soil water content is referred to as the moisture characteristic curve for that particular soil. The soil moisture characteristic curve exhibits a hysteresis

effect for any given history of alternative wetting and drying. The moisture characteristic curves in such cases can span the area between two limiting curves, one for drying and the other for wetting.

If we ignore the effect of temperature and osmotic pressure, the movement of water will take place under the action of a potential difference in accordance with a generalization of Darcy's Law:

$$V = -K \operatorname{grad}\phi \tag{1}$$

where V is the rate of flow per unit area, K is the hydraulic conductivity of the soil (which is dependent on moisture content), and ϕ is the hydraulic head or potential. The potential is made up of pressure head and elevation:

$$\phi = \frac{p}{\gamma} + z \tag{2a}$$

$$= -S + z \tag{2b}$$

where

$$S = -\frac{p}{\gamma} \text{ is the soil suction} \tag{2c}$$

and z is the elevation above a fixed datum.

In considering infiltration, percolation, and evaporation, we are largely concerned with flow in a vertical direction. For vertical flow, equation 1 becomes:

$$V = -K \frac{\partial}{\partial z}(S + z) \tag{3a}$$

or

$$V = K \frac{\partial S}{\partial z} - K \tag{3b}$$

If the soil suction (S) is assumed to be a single-valued function of the moisture content (c), then we can define the hydraulic diffusivity of the soil as:

$$D = -K \frac{\partial S}{\partial c} \tag{4a}$$

and write equation 3 as:

$$V = -D \frac{\partial c}{\partial z} - K \tag{4b}$$

which is the one-dimensional diffusion form of Darcy's Law. Over a given range of moisture content, the variation in D will be less than the variation in K.

For unsteady flow in an unsaturated soil in a vertical direction, we have the

equation of continuity:

$$\frac{\partial V}{\partial z}+\frac{\partial c}{\partial t}=O \tag{5}$$

where V is the rate of flow per unit area and c is the moisture content expressed as a proportion of total volume. Combination of equations 1 and 5 gives us:

$$\frac{\partial}{\partial z}\left(K\frac{\partial \phi}{\partial z}\right)=\frac{\partial c}{\partial t} \tag{6a}$$

or using equation 2b we get:

$$-\frac{\partial}{\partial z}\left(K\frac{\partial S}{\partial z}\right)+\frac{\partial K}{\partial z}=\frac{\partial c}{\partial t} \tag{6b}$$

and with equation 4b we get:

$$\frac{\partial}{\partial z}\left(D\frac{\partial c}{\partial z}\right)+\frac{\partial K}{\partial z}=\frac{\partial c}{\partial t} \tag{6c}$$

For infiltration into a very dry soil (or upward movement from the ground water to a dry soil surface), the gradient of the soil suction will be very much larger than the difference in elevation. Consequently, the last term (K) on the right-hand side of equations 3b and 4b can be neglected compared with the other two terms; similarly, the second terms on the left-hand side of equations 6b and 6c can be neglected. Omission of these terms corresponds to the assumption that the effect of gravity on water movement is negligible compared to the effect of the gradient of soil moisture suction.

Equation 6 is a nonlinear parabolic equation since hydraulic conductivity (K) and the hydraulic diffusivity (D) are functions of the moisture content (c). Equation 6c has the same mathematical form as the concentration-dependent diffusion equation in mathematical physics and is the most convenient form for theoretical analysis.

A number of authors have suggested empirical relationships between the unsaturated permeability (K) or the hydraulic diffusivity (D) on the one hand, and the moisture content (c) or the soil suction (S) on the other. These can be used in the place of purely empirical moisture characteristic curves to predict water profiles and water movement; they could also be used as the basis for conceptual models of the movement of moisture in the unsaturated zone. Bear, Zaslavsky, and Irmay (*1*) suggested that unsaturated permeability can be related to saturated permeability by the equation:

$$\frac{K}{K_{\text{sat}}}=\left(\frac{c-n_0}{n-n_0}\right)^3 \tag{7}$$

where c is the moisture content, n is the total porosity, and n_0 is the ineffective

or irreducible porosity. Gardner (*13*) suggested expressing unsaturated permeability as a function of soil moisture suction by an equation of the form:

$$K=\frac{a}{b+S^m} \tag{8a}$$

which can be written as:

$$\frac{K}{K_{sat}}=\frac{b}{b+S^m} \tag{8b}$$

where K is the unsaturated permeability, S is the soil moisture suction, m is a parameter which has a value of approximately 2 for heavy soils and approximately 4 for sands, and a and b are empirical parameters. Gardner also used an exponential relationship between unsaturated permeability and soil suction:

$$\frac{K}{K_{sat}}=\exp(-aS) \tag{8c}$$

Some special cases of the relationship given in equation 8a had been suggested previously by Wind (*45*) and by Remson and Fox (*36*). Gardner and Mayhugh (*14*) have suggested the following relationship for the hydraulic diffusivity:

$$\frac{D}{D_0}=\exp[a(c-b)] \tag{9}$$

where D_0 is the value of the hydraulic diffusivity for the moisture content $c=b$ and a and b are experimental parameters.

Under steady state conditions with no loss or gain of moisture to the atmosphere, the soil moisture profile will be in equilibrium. The moisture in the unsaturated zone is held above the water table against the pull of gravity by the soil suction; the curvature of the interface between soil air and soil water allows the soil water to be at a pressure less than atmospheric.

In a steady percolation rate (q) from the surface to the water table, we have:

$$q=K\left[1-\frac{\partial S}{\partial z}\right] \tag{10a}$$

or in terms of the hydraulic diffusivity:

$$q=K+D\frac{\partial c}{\partial z} \tag{10}$$

The level above the water table at which a particular moisture content occurs

can be determined from:

$$z = \int_{S=0}^{S} \frac{K}{K-q}\, dS \tag{11a}$$

$$z = \int_{c_{sat}}^{c} \frac{D}{q-K} \cdot dc = \int_{c}^{c_{sat}} \frac{D}{K-q} \cdot dc \tag{11b}$$

In a multilayered soil, the integration can be carried out separately in each layer:

$$z = \sum_i \int_{S_{i-1}}^{S_i} \frac{K_i}{K_i - q}\, dS \tag{12a}$$

$$z = \sum_i \int_{c_{i-1}}^{c_i} \frac{D_i}{q-K_i}\, dc \tag{12b}$$

Since it is the soil suction that is continuous across the boundary between layers, there will be discontinuities at the boundaries if the computation is done in terms of moisture content.

The steady upward movement of water from below the water table to provide a steady rate of evaporation (e), gives rise to a similar formula, except that in this case we have:

$$e = K\left(\frac{\partial S}{\partial z} - 1\right) \tag{13a}$$

$$e = -D\frac{\partial c}{\partial z} - K \tag{13b}$$

and the solution is given by:

$$z = \int_{s=o}^{S} \frac{K}{K=e} \cdot dS \tag{14a}$$

$$z = \int_{c}^{c_{sat}} \frac{D}{K+e} \cdot dc \tag{14b}$$

If the water table is very close to the surface, there will only be a small drying of the surface, and evaporation can occur at the potential rate. In the case of a deep water table, however, the gradient necessary to move water up from below the water table results in a high soil suction at the surface and, consequently, a lower moisture content and a lower unsaturated permeability. By using an empirical relationship between K and S, it is possible to integrate equation 14a and so predict the soil profile for capillary rise (*36, 37*). A similar calculation could be used to estimate transpiration by using a constant suction at a given elevation to simulate root action.

For the conditions of deep water table and high evaporation rate, it can be shown that there is a limiting rate of evaporation which depends on the depth of the ground water and the soil properties (*13*). Under some conditions, this concept of a limiting rate of evaporation, depending not on climatological data but on soil properties and conditions, may be of importance for the modeling of the soil phase of the total catchment response.

Gardner has shown that if the unsaturated permeability can be assumed to have the relationship with soil suction given by equation 8a, then for any given value of m, the limiting rate of evaporation would be given by:

$$\frac{e_{\lim}}{K_{\text{sat}}}=\frac{\text{constant}}{(z_o)^m} \tag{15}$$

where z_o is the depth of the water table below the surface. Evaporation may take place at greater than this limiting rate, but if it does the water being supplied from soil moisture storage rather than ground water storage and the soil moisture distribution is not that of a steady state. Schleusener and Corey (*39*) have reported experimental results indicating the existence of a maximum rather than a limiting rate of evaporation from the soil surface and suggest that this phenomenon can be explained by the effect of hysteresis.

Unsteady Movement of Soil Moisture

In practice, the soil moisture rarely attains an equilibrium profile. Rather than having a constant rainfall rate or a constant evaporation rate at the surface for a long period, we have alternating precipitation and evaporation resulting in continual changes in the moisture profile and the unsteady movement of water either upwards or downwards in the soil. As hydrologists, we are largely concerned with conditions which occur when a dry soil is wetted by precipitation at a higher rate than the average or when a wet soil is depleted of its moisture content by an evaporation rate higher than average. As in the case of steady downward percolation, or steady upward capillary rise, the problems of upward and downward movement are essentially similar, and techniques which work for one will be appropriate for the other. Due to limitations of space, only the infiltration problem will be dealt with in the present discussion.

It is important to distinguish between the infiltration capacity of the soil at any particular time and the actual infiltration occurring at that time. Infiltration capacity is the maximum rate at which the soil in a given condition can absorb water at the surface. If the rate of rainfall or the rate of snowmelt is less than the infiltration capacity, then the actual infiltration will be less than the infiltration capacity since the amount of moisture entering the soil cannot exceed the amount available. A number of empirical formulas for infiltration capacity have been proposed in the literature. Those by Kostiakov (*23*), Horton (*19*), Holtan (*17*), and Overton (*29*) are discussed below. The theo-

retical formulas which are discussed are: the solution of the basic equation on a constant diffusivity (*4*), the solution based for a constant profile (*30*), and Philip's general solution for the ponded infiltration case (*31*).

The following notation will be used for both empirical and theoretical formulas:

$f=$ rate of infiltration capacity
$f_0=$ initial rate of infiltration capacity
$f_c=$ ultimate rate of infiltration capacity
$f_e=$ rate of excess infiltration $(f-f_c)$
$F=$ volume of infiltration
$F_c=$ ultimate volume of infiltration
$F_p=$ volume of potential infiltration (F_c-F)
$F_e=$ volume of excess infiltration $(F-f_ct)$
$F_{ce}=$ final volume of excess infiltration $(F_c-f_c\cdot t)$
$F_{pe}=$ volume of potential excess infiltration $(F_{ce}-F_e)$.

In the case of formulas for infiltration volume, the corresponding formula for infiltration rate can be gotten by differentiation. In the case of formulas for infiltration rate, the formula for infiltration volume can be gotten by integration. All of the above definitions refer to infiltration capacity. If it is necessary to distinguish it, the actual infiltration rate can be designated by f_A and the actual volume of infiltration by F_A.

As mentioned above, attention will be confined to the more important empirical equations found in the literature. In 1932, Kostiakov (*23*) proposed the following formula for the initial high rate of infiltration:

$$f=\frac{a}{t^b} \tag{16}$$

where f is the rate of infiltration up to the time when the infiltration rate would be equal to the saturated permeability of the soil. Horton (*19*) suggested the following formula for the rate of infiltration capacity:

$$f-f_c=(f_o-f_c)\exp(-kt) \tag{17a}$$

$$f_e=f_{oe}\exp(-kt) \tag{17b}$$

Holtan (*17*) suggested that the rate of excess infiltration in the early part of a storm could be related to the volume of potential infiltration (F_p) by an equation of the form:

$$f-f_c=a(F_p)^n \tag{18a}$$

or

$$f_e=a(F_p)^n \tag{18b}$$

Overton (*29*) showed that for a value of $n=2$ in equation 18, the rate of

infiltration could be expressed as a function of time in the following form:

$$f=f_c\cdot\sec^2[\sqrt{af_c}(t_c-t)] \tag{19a}$$

where t_c is given by:

$$t_c=\sqrt{\frac{1}{af_c}}\cdot\tan^{-1}\left(F_c\sqrt{\frac{a}{f_c}}\right) \tag{19b}$$

and is the time taken for the infiltration capacity rate to fall to its final value f_c.

We turn now from empirical formulas based on the analysis of field observations to theoretical formulas based on the principles of soil physics. For a soil whose moisture characteristics and unsaturated permeability (or hydraulic diffusivity) are known, equation 6 for the unsteady vertical movement of moisture in a soil can be solved by numerical methods (*22*, *31*, *38*). We are, however, more concerned with simplified mathematical formulations of this particular problem.

One of the simplest models of infiltration into a soil (and the subsequent downward percolation of the wetting front) is that obtained if the hydraulic diffusivity is taken as constant (*4*) and, in addition, either the hydraulic conductivity taken as a constant or the effect of gravity neglected. In this case, we have:

$$D\frac{\partial^2 c}{\partial z^2}=\frac{\partial c}{\partial t} \tag{20a}$$

Instead of taking elevation (z) vertically upwards from a datum, we express our equation in terms of the depth of percolation downward from the surface (x) so that we have:

$$D\frac{\partial^2 c}{\partial x^2}=\frac{\partial c}{\partial t} \tag{20b}$$

For the problem of ponded infiltration into an infinitely deep soil, we have the boundary conditions:

$$c=c_o, \quad \text{for} \quad t=0,\ x>0 \tag{20c}$$

$$c=c_s, \quad \text{for} \quad t\geq 0,\ x=0 \tag{20d}$$

where c_o is the initial moisture content of the dry soil and c_s is the constant moisture content at the surface (usually, but not necessarily, c_{sat}). Equation 20b is a linear parabolic equation of the diffusion type and has a solution of the general form:

$$c=\phi_1\left(\frac{x^2}{t}\right) \tag{21a}$$

which gives the moisture content (c) for a given depth of penetration (x) at a

given time (t). The depth of penetration for a given moisture content can be written as:

$$x = t^{1/2} \cdot \phi_2(c) \tag{21b}$$

The total amount of infiltration up to a given time t is given by:

$$F = \int_{c_0}^{c_s} x \cdot dc + K_0 \cdot t \tag{22a}$$

where K_0 is the unsaturated permeability corresponding to the initial moisture content c_0. Substituting equation 21b into equation 22a we obtain:

$$F = \int_{c_0}^{c_s} t^{1/2} \phi_2(c) \cdot dc + K_0 t \tag{22b}$$

This is clearly seen to give:

$$F = t^{1/2} \cdot \int_{c_0}^{c_s} \phi_2(c)\ dc + K_0 t \tag{22c}$$

which allows us to express the infiltration volume (F) as a function of time, and of the initial and saturated moisture contents and the initial permeability:

$$F = \phi_3(c_0, c_s) t^{1/2} + K_0 t \tag{23a}$$

It can be shown that ϕ_3 takes the form:

$$\phi_3 = \sqrt{\frac{4D}{\pi}}\ (c_{\text{sat}} - c_0) \tag{23b}$$

Equation 23 is the infiltration capacity equation for the simple model of constant diffusivity and constant permeability. On the basis of the definition of hydraulic diffusivity in equation 4, this is equivalent to assuming that soil suction is related to moisture content by:

$$S = \frac{D}{K}\ (c_{\text{sat}} - c) \tag{24}$$

that is, that the soil suction is a linear function of the moisture content. It should be noted that the two parameters in equation 23a both vary with initial moisture content.

As an alternative to assuming constant diffusivity and constant permeability, we can make the assumption that the diffusivity is constant but that the permeability is a linear function of the moisture content, that is, that

$$\frac{K}{K_{\text{sat}}} = \frac{c}{c_{\text{sat}}} \tag{25a}$$

By inserting the relationship given by equation 25a in equation 4, we obtain

a logarithmic relationship between soil suction and moisture content given by:

$$S=\frac{D}{k}\cdot\log_e\left(\frac{c_{sat}}{c}\right) \tag{25b}$$

where

$$k=\frac{K_{sat}}{c_{sat}} \tag{25c}$$

For the model of constant diffusivity and linear permeability, equation 6c can be written as:

$$D\frac{d^2C}{dz^2}+k\frac{dc}{dz}=\frac{dc}{dt} \tag{26a}$$

which is the same as equation 20 except for the addition of the "convective" term. It is still a linear equation and is similar in form to both the parabolic (that is, diffusion analogy) form of the linearized equation for unsteady flow in an open channel, discussed in lecture 9, and to the linearized equation for unsteady ground water movement to be discussed later in this lecture. For the same boundary conditions as given in equations 20c and 20d, equation 26a has the solution:

$$\left(\frac{c-c_0}{c_{sat}-c_0}\right)=\tfrac{1}{2}erfc\left(\frac{x-kt}{2\sqrt{Dt}}\right)+\tfrac{1}{2}\exp\left(\frac{kx}{D}\right)erfc\left(\frac{x+kt}{2\sqrt{Dt}}\right) \tag{26b}$$

When converted from the form of equation 26b, which is appropriate to the moisture profile, this solution gives for the rate of infiltration capacity:

$$f=\frac{K_{sat}-K_0}{2}\left[\frac{\exp[-(k^2t/4D)]}{\sqrt{\pi k^2t/4D}}-erfc\left(\sqrt{\frac{k^2t}{4D}}\right)\right]+K_{sat} \tag{26c}$$

Solutions to the problem of ponded infiltration have also been obtained by assuming the hydraulic diffusivity to be a linear or an exponential function of the moisture content (*40*).

In 1911, Green and Ampt (*15*) proposed a formula for infiltration into the soil based on a model of uniform parallel capillary tubes. In fact, their approximate treatment is not dependent on this specific model but merely on the assumption that the advancing moisture profile consists of two parts—an upper zone of higher moisture content (c_2) separated from the original dry soil ($c=c_1$) by a sharp discontinuity (*5, 30*).

The rate of flow through the upper part of the soil may be written as:

$$V=K_2\cdot\frac{(\phi_2-\phi_1)}{x} \tag{27a}$$

where ϕ_2 is the total head at the top of the column and is given by:

$$\phi_2 = x + H \tag{27b}$$

where x is the depth of penetration of the higher moisture content and H is the depth of ponding on the surface. ϕ_1 is the total head immediately below the discontinuous wetting front and is numerically equal to the suction (S_a) at which air enters the soil medium. Consequently, equation 27a can now be written as:

$$V = K_2 \left[\frac{(x + H + S_a)}{x} \right] \tag{27c}$$

Since the upper part of the soil is assumed to have a constant mean moisture content (c_2), we can also write:

$$V = (c_2 - c_1) \frac{dx}{dt} \tag{27d}$$

Combining equations 27c and 27d we have:

$$\frac{dx}{dt} = \left(\frac{K_2}{c_2 - c_1} \right) \left(1 + \frac{H + S_a}{x} \right) \tag{28a}$$

which integrated will give:

$$\left(\frac{K_2}{c_2 - c_1} \right) t = x - (H + S_a) \left[\log_e \left(1 + \frac{x}{H + S_a} \right) \right] \tag{28b}$$

This equation has the disadvantage that it relates the depth of penetration (x) to the time (t) in implicit form. However, it can be seen from equation 26c that the rate of infiltration is extremely high for small values of x and approaches the value K_2 for large values of x.

A more complete theory of infiltration allowing for concentration-dependent diffusivity and for the gravity term has been developed by Philip (*31*). Philip showed that the equation for the depth of penetration of given moisture content can be represented by the series:

$$x = a_1(c) \cdot t^{1/2} + a_2(c) t + a_3(c) t^{3/2} + \ldots\ldots a_m(c) t^{m/2} + \ldots\ldots \tag{29}$$

and states that, for the range of t and of values of D and K of interest to soil scientists, the above series converges so rapidly that only a few terms are required for an accurate solution. Equation 21b developed above for constant diffusivity and constant permeability is seen to correspond to the first term of equation 29.

As for the simpler model, the volume of infiltration can be obtained by integrating the depth of penetration over the range of change in moisture

content. For the present model this gives:

$$F=\int_{c_o}^{c_{sat}} x\cdot dc+K_o t \tag{30a}$$

$$F=\int_{c_o}^{c_{sat}} [a_1(c)t^{1/2}+a_2(c)t+a_3(c)t^{3/2}+\ldots\ldots]\,dc+K_o t \tag{30b}$$

which converges except for very large values of t. Philip suggested that for most practical purposes only the first two terms are required so that we can write:

$$F=S\cdot t^{1/2}+A\cdot t \tag{31a}$$

where S is called the sorptivity and is given by:

$$S=\int_{c_o}^{c_{sat}} a_1(c)\,dc \tag{31b}$$

and the second parameter A is given by:

$$A=K_o+\int_{c_o}^{c_{sat}} a_2(c)\,dc \tag{31c}$$

In a series of papers, Philip (*31*, *32*) discussed the implications of the solution given by equation 30, the nature of the surface profile, the effect of surface ponding, and other factors.

It must be emphasized that the solutions given above are all for one particular formulation of the infiltration problem. In every case, the analysis is made on the basis of an infinitely deep soil profile with a uniform initial moisture content, into which infiltration takes place as a result of the saturation of the surface. Such a stylized case would have to be modified in several respects before it would correspond closely to conditions in actual catchments. In practice, the theoretical solution would be modified by the presence of a water table at some finite depth, by the actual moisture distribution in the profile at the instant that the surface is first saturated (which would depend on the previous history of moisture distribution and movement in the profile), by distinct layers in the soil profile which might give rise to interflow, on the possibility of shrinkage and swelling in the soil, and so on. Nevertheless, as in so many other instances in hydrology, a simple model can be adopted to get a feel of the phenomena under study and then be used as the basis of a more complex model.

Comparison of Infiltration Formulas

It is interesting to compare with one another the mathematical equations for ponded infiltration based on various simplifying assumptions and to relate them to the empirical equations which have been suggested. This is done in the present section for the theoretical and empirical equations mentioned

earlier. Finally, an attempt is made to relate the mathematical simulation of infiltration to possible conceptual models of infiltration to explore the possibility of using conceptual models in the soil moisture phase of the hydrologic cycle.

The first comparison made is for initial infiltration rates, that is, for the form of the mathematical equations at small values of t. For the model based on constant hydraulic diffusivity and constant saturated permeability, the infiltration rate—which can be obtained by differentiating equation 23—is given by:

$$f=(c_{\text{sat}}-c_o)\sqrt{\frac{D}{\pi t}}+K \tag{32a}$$

The infiltration rate is seen to vary inversely with the square root of the time elapsed and to vary directly with the difference between saturated and actual moisture content (that is, with the volume of pore space available).

The infiltration rate for the model based on constant hydraulic diffusivity and a linear variation in unsaturated permeability with moisture content is given in equation 26c. For small values of t, this equation can be expressed (*31*) in the following form:

$$f=\frac{K_{\text{sat}}-K_0}{2\sqrt{\pi}}\left[\frac{4D}{k^2t}-\sqrt{\pi}+\sqrt{\frac{k^2t}{4D}}-\ldots\ldots\right]+K_{\text{sat}} \tag{32b}$$

If only the first two terms are used, this becomes:

$$f=(c_{\text{sat}}-c_0)\sqrt{\frac{D}{\pi t}}+\frac{K_0+K_{\text{sat}}}{2} \tag{32c}$$

It can be seen by comparing equations 32a and 32c that if the constant unsaturated permeability in the first model is taken as the mean value of the initial and the saturated permeability, the infiltration rates will be identical for those small values of the time in which the series within square brackets in equation 32b can be adequately represented by the first two terms.

For the Green and Ampt model, the infiltration for small values of t and, hence, small values of x can be obtained by neglecting 1 in the last term within the brackets in equation 28a and then integrating to obtain:

$$x=\sqrt{\frac{K_2}{c_2-c_1}\cdot(H+S_o)\cdot 2t} \tag{32d}$$

By differentiating the latter equation and substituting the value in equation 27d, we obtain for the infiltration rate:

$$f=\sqrt{\frac{(c_2-c_o)(K_2)(S_o+H)}{2t}} \tag{32e}$$

An interesting comparison between the Green and Ampt model and the

model based on constant hydraulic diffusivity and constant unsaturated permeability can be made as follows. If the concentration difference in equation 32a is taken under the square root sign, it will appear as squared. The model of constant diffusivity and permeability in equation 24 implies a specific relationship between soil suction and moisture content indicated by that equation. Accordingly, one of the two equal factors of $(c_{sat}-c_o)$ under the square root sign can be replaced by $K.S_o/D$ so that we have for the infiltration rate:

$$f=\sqrt{\frac{(c_2-c_o)(K)(S_o)}{\pi t}} \tag{32f}$$

thus indicating a close similarity between the two models.

Finally, the behavior for small values of t of Philip's general solution for ponded infiltration can be examined. Philip (*32*) suggested that for practical purposes only the first two terms of equation 30 need be retained and that the equation can be written in the form of equation 31a. The infiltration rate corresponding to this equation is given by:

$$f=\frac{S}{2t^{1/2}}+A \tag{32g}$$

in which the parameter S is termed "the sorptivity."

All four models are thus seen to give closely similar solutions for the initial period of infiltration and to correspond to the empirical equation proposed by Kostiakov in equation 16, with the special value of $b=\frac{1}{2}$. From a systems viewpoint, it would appear that the high infiltration rates at the start of a storm could be represented by equation 32g with the sorptivity (S) and the ultimate infiltration rate (A) as parameters to be determined.

A comparison can also be made between the behavior of the different models at very large values of t. For the constant diffusivity and constant permeability model, the ultimate infiltration rate is given by the constant value of the permeability K. For the model based on constant diffusivity and linear variation of unsaturated permeability, the general solution given in equation 26c has the following form for large values of t (*33*):

$$f=(c_{sat}-c_0)\left(\frac{D}{\pi t}\right)^{3/2}\cdot\exp\left(-\frac{k^2t}{4D}\right)+K_{sat} \tag{33}$$

For very large values of t the exponential term will render the first term on the right-hand side of equation 33 negligible, and give as the ultimate value of the infiltration rate the saturated permeability K_{sat}.

It is clear from the above discussion that all of the models are compatible with the equation proposed for practical use by Philip and given in equation 32g. However, in linear models the indication is that the first term will be

proportional to the difference between the saturated moisture content and the initial moisture content. Accordingly, it is suggested that a convenient formula for use in the simulation of infiltration might be:

$$f=\frac{a(c_{\text{sat}}-c_0)}{t^{1/2}}+f_c \tag{34}$$

Using the form of equation 34 rather than equation 32g would enable us to allow for the effect of varying initial moisture contents in the synthesis of a catchment response. For any storm event, the initial moisture content would be available from the soil moisture accounting.

Overton (*29*) has shown that a number of infiltration equations can be derived by postulating a relationship between the rate of infiltration (or excess infiltration) and the volume of either actual or potential infiltration (or excess infiltration). Thus, we can write each of the models for infiltration in terms of the variables listed. Thus, if we write:

$$f=\frac{a}{F} \tag{35}$$

we are using the assumption that the rate of infiltration is inversely proportional to volume of infiltration up to that time. Equation 35 can be readily integrated to give:

$$F=\sqrt{2at} \tag{36a}$$

or

$$f=\sqrt{\frac{2}{a}}\cdot t^{-1/2} \tag{36b}$$

which is the Kostiakov formula for $b=\frac{1}{2}$. Similarly if we write:

$$f_e=\frac{a}{F} \tag{37a}$$

that is

$$f-f_c=\frac{a}{F} \tag{37b}$$

the solution can be shown to be:

$$t=\frac{1}{f_c}\left[F-\frac{a}{f_c}\log_e\left(1+\frac{F}{a/f_c}\right)\right] \tag{37c}$$

which is of the same form as the Green-Ampt solution.

If the rate of excess infiltration is taken as inversely proportional to the

volume of excess infiltration, as follows:

$$f_e = \frac{a}{F_e} \tag{38a}$$

or

$$f - f_c = \frac{a}{F - f_c t} \tag{38b}$$

then the solution is:

$$F = \sqrt{2at} + f_c t \tag{38c}$$

which is Philip's equation 31a with:

$$S = \sqrt{2a} \tag{38d}$$

$$A = f_c \tag{38e}$$

It would be interesting to see if a rate-volume equation could be found that would give additional terms in Philip's general solution.

If we relate the rate of infiltration to potential infiltration volume, the simplest equation is:

$$f = aF_p \tag{39a}$$

or

$$f = a(F_c - F) \tag{39b}$$

or

$$f = f_0 - aF \tag{39c}$$

which has the solution:

$$F = \frac{f_0}{a}[1 - \exp(-at)] \tag{39d}$$

and

$$f = f_0 \cdot \exp(-at) \tag{39e}$$

Assuming the relationship:

$$f_e = aF_p \tag{40a}$$

is equivalent to equation 39 since it reduces to:

$$f = f_0 - aF \tag{40b}$$

and, hence, it also has the solution:

$$f = f_0 \cdot \exp(-at) \tag{40c}$$

The more general relationship:

$$f_e = aF_{pe} \tag{41a}$$

or

$$f - f_c = a(F_{ce} - F_e) \tag{41b}$$

or

$$f-f_c=f_0-f_c-a(F-f_ct) \tag{41c}$$

has the solution:

$$f-f_c=(f_0-f_c)\exp(-at) \tag{41d}$$

which is the Horton equation. Finally the relationship:

$$f_e=aF_p^2 \tag{42a}$$

is the relationship proposed by Overton himself which gives:

$$f=f_c\cdot\sec^2[\sqrt{af_c}(t_c-t)] \tag{42b}$$

as given earlier in this section.

Apart from its intrinsic interest, the formulation of the infiltration as a relationship between a rate of infiltration and a volume of actual or potential infiltration would appear to have many advantages in the formulation and computation of conceptual models of the soil moisture phase and the simulation of catchment response.

We are familiar with the concept of a linear reservoir as an element in which the outflow is directly proportional to the storage in the reservoir. Equation 39a represents an element in which the inflow is proportional to the storage deficit and, hence, might be considered as a special conceptual element to be known as a linear absorber. The relationship indicated by equation 41a could be considered as consisting of a linear absorber preceded by a constant rate of overflow, which diverts moisture at the rate f_c around the absorber and feeds into the ground water reservoir even when the field moisture deficit is not satisfied. By analogy, equation 35 might be considered as being represented by a second type of conceptual element in which the inflow into it is inversely proportional to the amount of inflow which has taken place. For want of a better name, this might be referred to as a linear inverse absorber. Much work remains to be done in this area, but there are indications of the track to be followed.

Basic Equations of Ground Water Flow

Even though linear solutions have been widely used in ground water hydraulics, until recently there has not been a deliberate treatment of ground water response as a linear system. An assumption frequently made in applied hydrology has been that the ground water reservoir acts as a single linear storage element. This assumption is implicit in the fitting of exponential recession curves to hydrographs and the plotting of falling hydrographs on semilog paper. Such a model is an extremely simple one, and we certainly have available the techniques to go beyond it. If we wish to tackle the ground water phase in the same way in which we tackle the surface runoff phase, then we should make the assumption that the ground water system is a linear system

and not that it is just a particular highly simplified, single-element, linear system. If we do so, we have available all the techniques of linear analysis and synthesis. We can derive a "ground water unit hydrograph" provided we know the ground water recharge and the ground water outflow.

From the point of view of synthesis, we can learn from what has been done in the simulation of the surface runoff phase of the hydrologic cycle, but we should beware of following too slavishly the approaches and the models developed in that particular field. If we are to simulate successfully, we must understand the physical hydrology of ground water flow and make use of existing knowledge in this field so that our models can be as "realistic" as possible. This section gives a very brief review of the basic equations of ground water flow, and then discusses a linearized solution of a special case of ground water flow and the possibility of simulating this solution by conceptual models.

The basic equations of ground water flow are well-established and can be studied in standard works such as Muskat (*28*), Polubarinova-Kochina (*35*), Luthin (*26*), Harr (*16*), deWiest (*10*), and Bear, Zaslavsky, and Irmay (*1*). Just as in open channel flow, we avoid the difficulties inherent in the analysis of two-dimensional flow by reducing our problem to one based on the assumption of one-dimensional flow. With this assumption, the equation of continuity for horizontal flow through soil in a saturated condition is:

$$\frac{\partial q}{\partial x}+f\frac{\partial h}{\partial t}=r(x,t) \tag{43}$$

where q is the horizontal flow per unit width, h is the height of the water table, f is the drainable pore space (which is assumed to be constant), and $r(x,t)$ is the rate of recharge at the water table.

The assumption that the stream lines are all horizontal and the velocity uniform with depth is known in ground water hydraulics as the Dupuit-Forcheimer assumption. For these conditions, Darcy's equation:

$$V=-K\ \mathrm{grad}\phi \tag{44a}$$

reduces to

$$V=-K\frac{\partial h}{\partial x} \tag{44b}$$

where K is the hydraulic conductivity (usually assumed to be constant) and gives us the following relationship between flow and height of water table:

$$q=-Kh\frac{\partial h}{\partial x} \tag{45}$$

Substitution from equation 45 into equation 43 gives us the differential

equation:

$$K\frac{\partial}{\partial x}\left(h\frac{\partial h}{\partial x}\right)+r(x,t)=f\frac{\partial h}{\partial t} \tag{46}$$

For a set of parallel drains or parallel trenches, which are a distance S apart and which are subject to a constant rate of recharge at the water tables, the equilibrium situation is given by:

$$\frac{\partial}{\partial x}\left(Kh\frac{\partial h}{\partial x}\right)+r=0 \tag{47a}$$

with the boundary conditions given by:

$$x=o \quad \text{or} \quad S, \quad h=d \tag{47b}$$

where d is the depth of water over the parallel drains or the depth of water in the parallel trenches, whichever is appropriate. This nonlinear equation has the solution:

$$Kh^2+r\left(x-\frac{S}{2}\right)^2=Kd^2+\frac{rS^2}{4} \tag{48}$$

which is known as the ellipse equation.

It must be remembered that equation 47 is based on the Dupuit-Forcheimer assumptions and is only correct if the flow can be validly approximated by a purely horizontal flow; if the drains or the trenches do not penetrate to the impervious layer, or if the depth (d) is small, the assumption ceases to be reasonable. The various solutions proposed for dealing with the problem as a two-dimensional flow may be reviewed in Luthin (*26*) or in a review paper by Kirkham (*21*). In our discussion of both steady and unsteady flow, we will be content to take the Dupuit-Forcheimer assumptions and the solutions derived from them as the basis of our discussion.

The problem of the recession of the water table after cessation of recharge is an important one in drainage engineering and has been widely studied. A recent review of work in this field has been given by van Schilfgaard (*43*). As in other fields, the first attempt is to seek a linear solution. There are two ways in which equation 46 can be linearized. In the first and more common linearization, the water table height inside the bracket in the first term of equation 46 is frozen at some parametric value ($\bar{h}$) and then removed outside the second differentiation with respect to x, thus giving:

$$K\bar{h}\frac{\partial^2 h}{\partial x^2}+r(x,t)=f\frac{\partial h}{\partial t} \tag{49}$$

In the second form of linearization, h^2 is used as the dependent variable instead of h and an equivalent parametric value of h is used to adjust the term

on the right-hand side of equation 46:

$$\frac{K}{2}\frac{\partial^2(h^2)}{\partial x^2}+r(x,t)=\frac{f}{2\bar{h}}\frac{\partial(h^2)}{\partial t} \tag{50}$$

Though the first linearization given by equation 49 is the more common form, the second one given by equation 50 has the advantage that for the steady state it gives the ellipse equation of equation 48, which is the correct nonlinear solution, whereas equation 49 gives a parabolic shape to the water table for the steady state condition. Both equations 49 and 50 are parabolic in form and can clearly be solved by the techniques which have proved successful in the analysis of problems in heat flow and of "diffusion-type" problems (*2, 9*).

Equation 49 for the initial condition of a level water table $h=h_0$ was solved by Glover[1] (Also, see reference *12* by Dumm) who obtained:

$$h-d=\frac{4(h_0-d)}{\pi}\sum_{n=1,3,5.....}^{\infty}\frac{\sin(n\pi x/S)}{n}\exp\left(-\frac{n^2\pi^2K\bar{h}t}{fS^2}\right) \tag{51a}$$

where

$h=$ elevation of water table above impervious layer
$d=$ elevation above the impervious layer of water surface in trench (or above drain)
$h_0=$ maximum elevation of water table
$x=$ horizontal distance from trench or drain
$S=$ spacing of trenches or drains
$K=$ saturated permeability of soil
$t=$ time elapsed since start of recession
$f=$ drainable pore space

Kraijenhoff (*24*) has pointed out that the soil and drainage characteristics in equation 51a may be grouped together into one parameter, which he defined as the reservoir coefficient j:

$$j=\frac{1}{\pi^2}\frac{fS^2}{K\bar{h}} \tag{51b}$$

so that Glover's solution can be written as:

$$h-d=\frac{4(h_0-d)}{\pi}\sum_{n=1,3.....}^{\infty}\frac{\sin(n\pi x/S)}{n}\exp\left(-n^2\frac{t}{j}\right) \tag{51c}$$

Kraijenhoff also pointed out that Glover's solution was the solution for a

[1] GLOVER, R. E., and BITTINGER, M. W. SOURCE MATERIALS FOR A COURCE IN TRANSIENT GROUNDWATER HYDRAULICS. Colo. State Univ. 1959. [Mimeographed.]

finite volume of recharge in an infinitesimal time and consequently equation 51c represents the impulse response of the ground water system.

If we adopt the second linearization instead of the first, a similar equation can be obtained, except that it will be in terms of h^2 rather than h. The difficulty about conflicting predictions of the shape of the water table profile does not affect us in our study of the recession of outflow. The outflow to a drain or a trench is given by:

$$Q = 2[q]_{x=0} \tag{52a}$$

In the first linearization, q is given by:

$$q = -Kh\frac{\partial h}{\partial x} = -K\bar{h}\frac{\partial h}{\partial x} \tag{52b}$$

and in the second equation, q is given by:

$$q = -Kh\frac{\partial h}{\partial x} = \frac{-K}{2}\frac{\partial}{\partial x}(h^2) \tag{52c}$$

so that in either equation we obtain for the discharge:

$$q = \frac{8K\bar{h}(h_0 - d)}{S}\sum_{n=1,3\ldots\ldots}^{\infty}\exp\left(-n^2\frac{t}{j}\right) \tag{53a}$$

If the initial height of instantaneous recharge $(h_0 - d)$ is expressed in terms of the volume of recharge, the drain spacing, and the drainable porosity of the soil, we have:

$$q = \frac{8K\bar{h}V}{S^2 f_0}\sum_{n=1,3\ldots\ldots}^{\infty}\exp\left(-n^2\frac{t}{j}\right) \tag{53b}$$

so that for an instantaneous input of unit volume we have as the impulse response:

$$h(t) = \frac{8}{\pi^2}\cdot\frac{1}{j}\sum_{n=1,3\ldots\ldots}^{\infty}\exp\left(-n^2\frac{t}{j}\right) \tag{54}$$

Obviously as t becomes large, the first term in the infinite series will dominate, and the outflow will approximate that from a single linear reservoir. For small values of t, however, the other contributions cannot be neglected, and for a value of t equal to zero, they are all equal and add up to an infinite initial value of $h(t)$.

The response function given in equation 54 has been normalized to have unit volume, and its moments can be shown to be:

$$U_1' = k_1 = \frac{\pi^2}{12}\cdot j \tag{55a}$$

$$U_2 = k_2 = \frac{7\pi^4}{720} \cdot j^2 \tag{55b}$$

$$U_3 = k_3 = \frac{31\pi^6}{15{,}120} \cdot j^3 \tag{55c}$$

The shape factors for the Glover solution as given by equation 54 calculated from equations 55a to 55c as:

$$s_2 = \frac{7}{5} = 1.40 \tag{55d}$$

$$s_3 = \frac{124}{35} = 3.54 \tag{55e}$$

If moment matching were taken as a criterion, then simulation of the Glover solution by a cascade of linear reservoirs (that is, by the gamma distribution) would require a value of $n = 0.7$ and a value of $K = 1.15$.

Note that if equation 54 were plotted on semilog paper, the first term would plot as a straight line and the other terms would only make contributions at small values of t. Following the lines of classical hydrology, we might be inclined to interpret such a result as indicating that the first term was the true baseflow and that the contributions due to the other terms represented residual interflow or surface runoff. If we took the straight line on the semilog plot as the baseflow, we would in fact truncate the infinite series of equation 54 and use only its first term in forming our implicit model. Such a procedure would have the further defect that we would take the lag of the system as equal to the reservoir coefficient j rather than the value given by equation 55a. The work which Kraijenhoff has initiated in applying the systems approach to the ground water phase is most important in so far as it indicates the likelihood of considerable progress if the techniques of parametric hydrology developed for the surface water part of the cycle are applied to the ground water.

Even if we wish to persist with the model of a single linear reservoir (that is, the first term only of the Glover-Kraijenhoff equation), then we can extract more use from this assumption than is normally done. If we assume that the recession for the ground water phase of our watershed is given by:

$$Q = Q_0 \cdot \exp\left(-\frac{t}{K}\right) \tag{56a}$$

then we are in fact assuming that the ground water reservoir acts as a single linear reservoir where we have:

$$S = K \cdot Q \tag{56b}$$

If such a system is subjected to recharge at a uniform rate (R), then the

ground water outflow during recharge will be given by:

$$Q = R\left[1 - \exp\left(-\frac{t}{K}\right)\right] + Q_0 \cdot \exp\left(-\frac{t}{K}\right) \tag{56c}$$

where the time origin is taken at the start of recharge. If the recharge ends after a time D, then the ground water outflow at this time will be:

$$Q = R\left[1 - \exp\left(-\frac{Q}{K}\right)\right] + Q_0 \cdot \exp\left(-\frac{D}{K}\right) \tag{56d}$$

Both before and after the recharge, the ground water outflow will follow the master recession curve. The outflow given by equation 56d is the same as would have been given if there had been an instantaneous increase in discharge at a time $t = 0$ of an amount:

$$Q = R\left[\exp\left(\frac{D}{K}\right) - 1\right] \tag{56e}$$

which would then recede along with the initial outflow. Assuming for the moment that there were no thresholds in the system and that recharge were taking place directly to ground water, equation 56e could be used together with a plot of ground water outflow and a knowledge of the volume of recharge to determine the rate and duration of recharge. Quite apart from this aspect of analysis, equation 56c indicates that the separation between ground water and direct storm runoff should be taken as a curve which is concave downwards rather than as a straight line.

The discussion given above for the recession of the water table deals with horizontal flow overlying a horizontal impervious layer. The analysis can be adapted to flow over an inclined impervious layer, but still retaining the Dupuit-Forcheimer assumptions and the linearization of the equation. If the slope of the impervious layer is taken as α, then equation 45 must be modified to give:

$$q = -Kh\left(\frac{\partial h}{\partial x} - \alpha\right) \tag{57a}$$

where h is still the elevation of the water table above the impermeable layer, which has a downward inclination of α to the horizontal. Similarly, equation 49 must be modified to give:

$$K\bar{h}\frac{\partial^2 h}{\partial x^2} - K\alpha\frac{\partial h}{\partial x} + r(x_1, t) = f\frac{\partial h}{\partial t} \tag{57b}$$

This is still a parabolic linear differential equation and resembles in form the convective diffusion equation, which has already been encountered as a model of unsteady flow in an open channel. Thus we see that the same model can be

used to simulate unsteady flow in an open channel, unsteady flow in the unsaturated zone, and unsteady flow in the saturated zone.

Other simple models can be devised for the recession of ground water flow. Thus we could estimate outflow on the basis of a succession of steady states in each of which the ellipse equation was assumed. The relationship between discharge and the water table for the ellipse equation is given by:

$$Q=\frac{4K}{S}\,(h^2_{\max}-d^2) \tag{58}$$

while the storage above the water level in the drains or trenches is given by:

$$V=f\cdot\frac{S}{4}\,(h_{\max}-d) \tag{59}$$

Two successive values of $h_{\max}$ could be taken and the difference in storage computed from equation 59. The average rate of outflow could then be approximated from equation 58 for a value of $h_{\max}$ half way between the two assumed. Division of the change of storage by this mean rate of outflow would give an estimate of the time taken for the level to fall by the amount assumed. For the combination of a very deep trench and a shallow rise of water table, as follows:

$$\frac{h_{\max}}{d}\ll 1 \tag{60a}$$

equation 58 could be written as:

$$Q=\frac{8K}{S}\,h_0(h_{\max}-d) \tag{60b}$$

Comparison of equation 60b with equation 59 indicates that storage is proportional to outflow so that we would in fact get an exponential recession with the recession constant given by:

$$K=\frac{V}{Q}=\frac{fS^2}{K}\,\frac{\pi}{32}=\frac{\pi^3}{32}\cdot j \tag{60c}$$

For a steep rise in water table in a shallow trench, that is, for:

$$\frac{h_{\max}}{d}\gg 1 \tag{61a}$$

equation 58 becomes:

$$Q=\frac{4K}{S}\cdot h^2_{\max} \tag{61b}$$

and equation 59 becomes:

$$V=\frac{f\pi S}{4}\cdot h_{\max} \tag{61c}$$

so that the outflow is proportional to the storage squared:

$$Q=\frac{64}{\pi^3}\cdot\frac{V^2}{jh_{\max}} \tag{61d}$$

For intermediate conditions, it should be possible to simulate the recession with fair accuracy by treating the ground water system as a nonlinear reservoir with the outflow proportional to some power of the storage:

$$Q=a(V)^c \tag{62}$$

where c has a value between 1 and 2.

The above discussion was not only based on a simplified analysis of ground water storage and flow, but it has also disregarded the linkage between ground water flow and the other phases of the hydrologic cycle. Space precludes a discussion of the work that has been done in this regard. However, the approach which has been outlined above can also be applied to such problems as the recharge of bank storage due to an increase in channel flow and the subsequent recession after the channel flow has diminished (*8*, *42*), and the interaction of ground water with the unsaturated zone and with the atmosphere (*3*, *11*).

Problems on Subsurface Flow

1. Look up in the literature empirical results for the values of the soil suction and the unsaturated permeability for a number of soils of different types. In each case, derive the hydraulic diffusivity from the data. Compare the absolute values, the range of values, and the variability of each of these soil moisture parameters according to the different types of soils.

2. Fit the empirical equations mentioned in the text to the data of the last problem. Compare the ability of the different formulas to represent the data.

3. For the soils for which you have obtained or derived data, tabulate or graph the equilibrium moisture distribution for various depths of ground water. Calculate the effect on this distribution of differing rates of percolation to the ground water or evaporation from the ground water, assuming steady state conditions.

4. Show that equation 15 for the limiting rate of evaporation from ground water can be derived from the assumption of the relationship between con-

ductivity and soil suction in the form given by equation 8a. Derive the value of the numerical constant in equation for n equal to 2, 3, and 4.

5. For the data used in problem 1, calculate the rate of evaporation for different values of soil suction at the surface for three assumed depths of ground water.

6. The text stated that for the assumption of constant diffusivity and constant permeability, the moisture content during unsteady infiltration can be represented as a function of x^2/t. Find the form of this function. Use your answer to find the value of the coefficient of the first term in the infiltration equation for constant diffusivity for a number of different values of the moisture content.

7. Derive an infiltration equation from a relationship between rate of infiltration (or excess infiltration) and either actual or potential infiltration (or excess infiltration) other than those mentioned in the text. Compare the derived equation to the standard equations.

8. Compare a number of infiltration formulas. What are the assumptions underlying the different formulas? How would you fit each of the formulas to the data given in Appendix table 9?

9. Compare the solutions given in the literature for the steady outflow of ground water in equilibrium with a constant rate of rainfall or infiltration. Compare the solutions for a given set of conditions, and discuss critically which solutions you consider would be the most accurate.

10. Compare the solutions given in the literature for the recession of the maximum water table level. Compare the assumptions made and the effect of the assumptions on the solution. Which solution would you consider to be the most accurate?

11. Using either a steady state solution or a water table recession solution other than those treated in the text, derive an expression for the recession of ground water outflow. Compare this solution with the solutions already derived.

12. Compare the various solutions for the recession of ground water outflow. Contrast the assumptions made and the effects of these assumptions on the form of the solution and on its accuracy.

13. Express the one-dimensional unsteady equation for ground water outflow in the appropriate finite difference form for setting up the problem for solution by direct analog. Show that this formulation is equivalent to a series of linear storage elements, each one causing backwater on the one before.

14. Show that the system of backwater storage elements derived in the last problem can be represented by an equivalent simulation system of linear storage elements without backwater.

15. Represent one of the unsteady state solutions by a model consisting of linear storage elements.

16. List the various methods for the separation of base flow from the total hydrograph which have been proposed in the literature. Indicate the physical justification, if any, for these various methods. Rank a few of the methods which you think are most accurate in order of their probable accuracy.

Literature Cited

(1) BEAR, J., ZASLAVSKY, D., and IRMAY, S.
1968. PHYSICAL PRINCIPLES OF WATER PERCOLATION AND SEEPAGE. UNESCO Arid Zone Res. XXIX. 465 pp., illus.

(2) CARSLAW, H. S., and JAEGER, J. C.
1947. CONDUCTION OF HEAT IN SOLIDS. 386 pp. New York.

(3) CHAPMAN, T. G.
1966. EFFECTS OF GROUNDWATER STORAGE AND FLOW IN THE WATER BALANCE. Symposium on Water Resources Use and Management. Pp. 290–301. Melbourne.

(4) CHILDS, E. C.
1936. THE TRANSPORT OF WATER THROUGH HEAVY CLAY SOILS. Jour. Agr. Sci. 26: 114–141, 527–545.

(5) ———
1967. SOIL MOISTURE THEORY. *In* Chow, Ven Te, ed., Advances in Hydroscience. V. 4, pp. 73–117. New York.

(6) ———
1969. AN INTRODUCTION TO THE PHYSICAL BASIS OF SOIL WATER PHENOMENA. 493 pp., illus. New York.

(7) COLORADO STATE UNIVERSITY.
1963. SYMPOSIUM ON TRANSIENT GROUNDWATER HYDRAULICS. Colorado State University, Fort Collins.

(8) COOPER, H. H., JR., and RORABAUGH, M. I.
1963. GROUNDWATER MOVEMENT AND BANK STORAGE DUE TO FLOOD STAGES IN SURFACE STREAMS. U.S. Geol. Survey Water-Supply Paper 1536-J, 366 pp.

(9) CRANK, J.
1956. THE MATHEMATICS OF DIFFUSION. 347 pp. London.

(10) DEWIEST, J. M. R.
1965. GEOHYDROLOGY. 366 pp., illus. New York.

(11) DOOGE, J. C. I.
1960. THE ROUTING OF GROUNDWATER RECHARGE THROUGH TYPICAL ELEMENTS OF LINEAR STORAGE. Commission on Subterranean Waters, General Assembly of Helsinki, Internatl. Assoc. Sci. Hydrol. Pub. 52: 286–300.

(12) DUMM, L. D.
1954. DRAIN-SPACING FORMULA. Agr. Engin. 35: 726–730.

(13) GARDNER, W. R.
1958. SOME STEADY STATE SOLUTIONS OF THE UNSATURATED MOISTURE FLOW EQUATION WITH APPLICATIONS TO EVAPORATION FROM A WATER TABLE. Soil Sci. 85(4): 228–232.

(14) ——— and MAYHUGH, M. S.
1958. SOLUTIONS AND TESTS OF THE DIFFUSION EQUATION FOR THE MOVEMENT OF WATER IN SOIL. Soil Sci. Soc. Amer. Proc. 22(3): 197–201.

(15) GREEN, W. H., and AMPT, G. A.
1911. STUDIES ON SOIL PHYSICS: I—FLOW OF AIR AND WATER THROUGH SOILS. Jour. Agr. Res. 4: 1–24.

(16) HARR, M. E.
1962. GROUNDWATER AND SEEPAGE. 315 pp., illus. New York.

(17) HOLTAN, H. N.
1961. A CONCEPT FOR INFILTRATION ESTIMATES IN WATERSHED ENGINEERING. U.S. Dept. Agr. Agr. Res. Serv. ARS 41–51, 25 pp.

(18) HORTON, R. E.
1938. THE INTERPRETATION AND APPLICATION OF RUNOFF PLOT EXPERIMENTS WITH REFERENCE TO SOIL EROSION PROBLEMS. Soil Sci. Soc. Amer. Proc. 3: 340–349.

(19) ———
1940. AN APPROACH TOWARD A PHYSICAL INTERPRETATION OF INFILTRATION CAPACITY. Soil Sci. Soc. Amer. Proc. 5: 399–417.

(20) IRMAY, S.
1956. EXTENSION OF DARCY LAW TO UNSATURATED FLOW THROUGH POROUS MEDIA. Symposia Darcy, Internatl. Assoc. Sci. Hydrol. Pub. 41: 57–66.

(21) KIRKHAM, DON.
1966. STEADY-STATE THEORIES FOR DRAINAGE. Amer. Soc. Civ. Engin., Jour. Irrig. and Drain. Div. 92(IR-1): 19–39.

(22) KLUTE, A.
1952. SOME THEORETICAL ASPECTS OF THE FLOW OF WATER IN UNSATURATED SOILS. Soil Sci. Soc. Amer. Proc. 16(2): 144–150.

(23) KOSTIAKOV, A. N.
1932. ON THE DYNAMICS OF THE COEFFICIENTS OF WATER PERCOLATION IN SOILS. Sixth Commission, Internatl. Soc. Soil Sci., part A, pp. 15–21. Groningen and Moscow.

(24) KRAIJENHOFF VAN DE LEUR, D. A.
1958. A STUDY OF NONSTEADY GROUND WATER FLOW WITH SPECIAL REFERENCE TO A RESERVOIR COEFFICIENT. Ingenieur 70(19): 87–94.

(25) ———
1966. RUNOFF MODELS WITH LINEAR ELEMENTS. PART II. RECENT TRENDS IN HYDROGRAPH SYNTHESIS. TNO Proc. and Inform. Note 13. The Hague.

(26) LUTHIN, J. N., ed.
1957. DRAINAGE OF AGRICULTURAL LANDS. Agronomy 7, 620 pp. Madison, Wis.

(27) MUSGRAVE, G. W., and HOLTAN, H. N.
1964. INFILTRATION. Sec. 12, 30 pp. *In* Chow, Ven Te, ed., Handbook of Applied Hydrology. New York.

(28) MUSKAT, M.
1937. FLOW OF HOMOGENEOUS FLUIDS THROUGH POROUS MEDIA. 763 pp. New York.

(29) OVERTON, D. E.
1964. MATHEMATICAL REFINEMENT OF AN INFILTRATION EQUATION FOR WATERSHED ENGINEERING. U.S. Dept. Agr. Agr. Res. Serv. ARS 41–99, 11 pp.

(30) PHILIP, J. R.
1954. AN INFILTRATION EQUATION WITH PHYSICAL SIGNIFICANCE. Soil Sci. Soc. Amer. Proc. 77(2): 153–157.

(31) ———
1957. THEORY OF INFILTRATION. CH. 1, THE INFILTRATION EQUATION AND ITS SOLUTION. Soil Sci. 83(5): 345–357.

(32) ———
1957. THEORY OF INFILTRATION. CH. 4, SORPTIVITY AND ALGEBRAIC INFILTRATION EQUATIONS. Soil Sci. 84(3): 257–264.

(33) ———
1968. A LINEARISATION TECHNIQUE FOR THE STUDY OF INFILTRATION. Symposium on Water in the Unsaturated Zone, Wageningen. Bul. Internatl. Assoc. Sci. Hydrol. Pub. 82, v. 1: 471–478.

(34) ———
1969. THEORY OF INFILTRATION. *In* Chow, Ven Te, ed., Advances in Hydroscience. V. 5: 216–296. New York.

(35) POLUBARINOVA-KOCHINA, P. Y.
1952. TEORIYA DVIZHENIYA POCHVENNOI VODI [THEORY OF GROUND WATER MOVEMENT]. English translation by J. M. R. deWiest. 613 pp. New Jersey.

(36) REMSON, I., and FOX, G. S.
1955. CAPILLARY LOSSES FROM GROUNDWATER. Amer. Geophys. Union Trans. 36(2): 304–310.

(37) RICHARDS, L. A.
1931. CAPILLARY CONDUCTIVITY LIQUIDS THROUGH POROUS MEDIUMS. Physics 1: 313–318.

(38) RUBIN, J.
1968. NUMERICAL ANALYSIS OF PONDED RAINFALL INFILTRATION WATER IN THE UNSATURATED ZONE. Symposium on Water in the Unsaturated Zone, Wageningen. Bul. Internatl. Assoc. Sci. Hydrol. Pub. 82, v. 1: 440–451.

(39) SCHLEUSENER, R. A., and COREY, A. T.
1959. THE ROLE OF HYSTERESIS IN REDUCING EVAPORATION FROM SOILS IN CONTACT WITH A WATER TABLE. Jour. Geophys. Res. 64: 469–475.

(40) SCOTT, E. J., and HANKS, R. J.
1962. SOLUTION OF THE ONE-DIMENSIONAL DIFFUSION EQUATIONS FOR THE EXPONENTIAL AND LINEAR DIFFUSIVITY FUNCTIONS BY POWER SERIES APPLIED TO MOISTURE FLOW IN SOILS. Soil Sci. 4(5): 314–321.

(41) SMITH, W. O.
1967. INFILTRATION IN SANDS AND ITS RELATION TO GROUNDWATER RECHARGE. Water Resources Res. 3(2): 539–555.

(42) TODD, D. K.
1955. GROUNDWATER FLOW IN RELATION TO A FLOODING STREAM. Proc. Amer. Soc. Civ. Engin. 81: 628.

(43) VAN SCHILFGAARDE, J.
1965. TRANSIENT DESIGN OF DRAINAGE SYSTEMS. Amer. Soc. Civ. Engin., Jour. Irrig. and Drain. Div. 91(IR-3): 9–22.

(44) WERNER

(45) WIND, G. P.
1955. THE FIELD EXPERIMENT CONCERNING CAPILLARY RISE OF MOISTURE IN A HEAVY CLAY SOIL. Netherlands Jour. Agr. Sci. 3: 60–69.

LIST OF SYMBOLS

The following list of symbols should be used as a guide to assist the reader in recognizing commonly cited variables, rather than as an exhaustive listing of all symbols used. In some cases, the number of the lecture in which a symbol is used in a particular sense is indicated in parentheses. This list does not include symbols used once or twice in a particular sense and defined where so used. Neither does it include symbols used to denote systems parameters or parameters in formulas except where such parameters are the subject of discussion.

A . . . . . superficial area of catchment.
A . . . . . cross-sectional area of channel (9).
A_k. . . . . a Fourier coefficient of output (5, 6).

B. . . . . base length of unit hydrograph (8).
B_k. . . . . a Fourier coefficient of output (5, 6).

C. . . . . capacitor in analog circuit (1, 7).
C. . . . . coefficient of runoff (4, 8).
C. . . . . coefficient in Chezy formula (10).
C_k. . . . . coefficient in expansion of output.

D. . . . . unit period of rainfall excess.
D. . . . . differential operator (3).
D. . . . . dimensionless length factor (9).
D. . . . . hydraulic diffusivity (9, 10).
D. . . . . duration of recharge (10).

E. . . . . evaporation.
$E(\ )$. . . . . error criterion.

F. . . . . volume of infiltration capacity.
F. . . . . Froude number (9).
F_a. . . . . actual volume of infiltration.
$F(s)$. . . . . Laplace transform of $f(t)$.
$F(\omega)$. . . . . Fourier transform of $f(t)$.
$F(z)$. . . . . Z-transform of $f(t)$.
$F_B(s)$. . . . . bilateral Laplace transform.
$F_I(\omega)$. . . . . imaginary part of $F(\omega)$.
$F_R(\omega)$. . . . . real part of $F(\omega)$.

$[H]$ . . . . . convolution matrix of system response.
H . . . . . available energy (2, 7).
H . . . . . depth of ponding (10).
$H(s)$ . . . . . system function, that is, Laplace transform of $h(t)$.
$H(\omega)$ . . . . . Fourier transform of impulse response.

I . . . . . rate of inflow to channel reach.
I . . . . . 24-hour rainfall (7).
$I_1[\ ]$ . . . . . modified Bassel function (9).

K . . . . . storage delay time.
K . . . . . hydraulic conductivity (2, 10).
$K_R(f)$ . . . . R^{th} cumulant of $f(t)$.

L . . . . . length of channel.
L_{ca} . . . . . length to center of area (8).
L_o . . . . . length of overland flow.
$L_n(t)$ . . . . . Laguerre polynomial.

M . . . . . duration of continuous input (1, 5).
$M_n(s)$ . . . . Meixner polynomial (3, 6).

N . . . . . memory length of system.

P . . . . . precipitation.
P . . . . . duration of output (1, 5).
P_d . . . . . unit pulse of duration D(1).
P_e . . . . . precipitation excess.

Q . . . . . runoff, flow, outflow.
Q . . . . . energy (2).
Q_b . . . . . base flow.
Q_g . . . . . ground water flow.
Q_i . . . . . interflow.
$Q_{\max}$ . . . . . peak discharge.
Q_o . . . . . overland flow.
Q_s . . . . . direct storm response (surface flow).

R . . . . . recharge to ground water.
R . . . . . resistance in analog circuit.
R . . . . . hydraulic radius (9).
R^2 . . . . . multiple correlation coefficient (7).
RO . . . . . runoff.

S.....storage in reach, storage.
S.....slope.
S.....soil suction (10).
S_f.....friction slope (9).
S_g.....ground slope.
S_0.....channel slope.
$S(t)$.....S-curve, S-hydrograph.

T.....transpiration (2, 7).
T.....length of time series (5, 6).
T.....period of repeated function (5, 6).
T.....time of virtual inflow (8).
T_m.....mean temperature (1, 7).

$U(t)$.....unit step function.
$U_R(f)$....R^{th} moment of $f(t)$ about center.
$U_R^1(f)$....R^{th} moment of $f(t)$ about origin.
$U.H.$.....unit hydrograph.

V.....velocity.
V.....volume of runoff.

$[X]$.....matrix of input values.
X_i.....volume of input in unit period.
$[X]^T$.....transpose of X.
$X(s)$.....Laplace transform of $x(t)$.
$X(w)$.....Fourier transform of $x(t)$.

a_k.....Fourier coefficient of input.

b_k.....Fourier coefficient of input.

c_k.....coefficient in expansion of input.

e.....vapor pressure.

f.....rate of infiltration capacity.
f.....specific yield, that is, drainable pore space (2, 10).
f_A.....actual rate of infiltration.
$f(t)$.....arbitrary function of time (3, 5).
$f_n(t)$.....n^{th} order Laguerre function (3, 6).
$f_n(s)$.....n^{th} order Meixner function.

$g_n(t)$ . . . . . function orthogonal under integration.
$g_n(s)$ . . . . . function orthogonal under summation.

$h(t)$ . . . . . impulse response function.
$\{h\}$ . . . . . vector if impulse response ordinates.
$h_D(t)$ . . . . . pulse response.
h_i . . . . . ordinate of unit hydrograph.
h_{opt} . . . . . optimum linear response.
$h_0(t)$ . . . . . instantaneous unit hydrograph (IUH).

i . . . . . precipitation intensity.
$i(x,t)$ . . . . . rate of distributed inflow (2).

m . . . . . time at start of final period of rainfall excess ($m=M-D$).
m_R . . . . . dimensionless moment.

n . . . . . length of finite-period unit hydrograph ($n=N+D$).

p . . . . . length of output for discrete-time ($p=P$).

$q(x,t)$ . . . . . discharge per unit width.
q_e . . . . . equilibrium discharge.
q_0 . . . . . reference discharge (9).

$r(x_1t)$ . . . . . rate of lateral inflow.
$r(t)$ . . . . . residual error (5).
$\{r\}$ . . . . . vector of residual errors (6).

s . . . . . discrete time variable.
s . . . . . complex argument of Laplace transform.
s_R . . . . . shape factor, that is, dimensionless cumulant.

t . . . . . continuous time variable.
t_c . . . . . time of concentration.
t_e . . . . . time to equilibrium.
t_L . . . . . lag time.
t_0 . . . . . characteristic response of flow (9).
t_p . . . . . time to peak.

$u(x,t)$ . . . . . velocity of flow (9).

x . . . . . distance along channel (9).
x . . . . . depth below surface (10).
x_i . . . . . ordinate of input.
$x(t)$ . . . . . continuous input function.
$\{x\}$ . . . . . vector of discrete inputs.
$x(sD)$ . . . . . discrete input function.

$y(t)$ . . . . . continuous output function.
y_i . . . . . ordinate of output.
$\{y\}$ . . . . . vector of discrete outputs.
$y(sD)$ . . . . . discrete output function.
$y(x,t)$ . . . . . depth of flow in open channel.

α_k . . . . . Fourier coefficient of system response.
β_k . . . . . Fourier coefficient of system response.
δ_{mn} . . . . . Kronecker delta.

ϕ . . . . . hydraulic potential.
$\phi_{xx}(k)$ . . . . . discrete autocorrelation function.
$\phi_{xx}(\tau)$ . . . . . continuous autocorrelation function.
$\phi_{xy}(k)$ . . . . . discrete cross-correlation function.
$\phi_{xy}(\tau)$ . . . . . continuous cross-correlation function.

γ_k . . . . . coefficient in expansion of system response.
μ_R . . . . . R^{th} moment.
σ_D . . . . . discrete time variable.
τ . . . . . continuous time variable.
ω . . . . . argument of Fourier transform.

APPENDIX TABLES

TABLE 1.—*Continuous functions*

No.	Function	Range
1	1	$0<t<2$
	0	elsewhere
2	$t/4$	$0<t<2$
	$1-t/4$	$2<t<4$
	0	elsewhere
3	$t/5$	$0<t<2$
	$\frac{2}{3}-\frac{2t}{15}$	$2<t<5$

TABLE 1.—*Continuous functions*—Con.

No.	Function	Range
4.....	$125-75\cos\left(\frac{\pi t}{48}\right)$	$-\infty<t<\infty$
5.....	$125-75\cos\left(\frac{\pi t}{48}\right)$	$0<t<96$
6.....	$I_{\min}+(I_{\max}-I_{\min})\sin\left(\frac{2\pi t}{T}\right)$	$0<t<T$
7.....	$\exp(-t/k)$	$0<t<\infty$
8.....	$\frac{(t/k)^{n-1}\exp(-t/k)}{(n-1)!k}$	$0<t<\infty$
9.....	$\sqrt{\frac{a}{\pi}}\exp(-at^2)$	$-\infty<t<\infty$
10.....	$\frac{t^3\exp(-t)}{3!}$	$0<t<\infty$
11.....	$\frac{t^3}{3!}\exp(-t/2)$	$0<t<\infty$
12.....	$\frac{1}{2}\left(t+\frac{t^2}{2}\right)\exp(-t/2)$	$0<t<\infty$
13.....	$\frac{1}{2}\left(\frac{t^5}{5!}+\frac{t^6}{6!}\right)\exp\left(-\frac{t}{2}\right)$	$0<t<\infty$
14.....	$10t(1-t)\exp(1-t)$	$0<t<1$
15.....	$\frac{t}{10}\cdot\exp(8-t)-\frac{t}{10}$	$0<t<8$
16.....	(a) $\frac{t^3}{12}(2-t)\exp(9-t)$ $+(t^2+3t+4)\exp(1-t)$ $-(4-t)e$	$0<t<1$
	(b) $\left(\frac{2t-1}{12}\right)\exp(9-t)$ $+(11-3t)-(4-t)e$	$1<t<8$
	(c) $\frac{(12t^2-130t+335)}{12}\exp(9-t)$ $-(t-8)^3(152-4t-t^2)$ $+(11-3t)$	$8<t<9$

TABLE 2.—*Discrete functions*

No.	Function	Range
1.....	(2, 1)	
2.....	(6, 4)	
3.....	(2, 6, 1)	
4.....	(0, 4, 14, 8, 1, 0)	
5.....	(0, 4, 11, 8, 1, 0)	
6.....	(1, 5, 2, 2)	
7.....	(0, 2, 4, 2, 0)	
8.....	(0, 3, 6, 4, 2, 0)	
9.....	(0, 2, 4, 3, 2, 1, 0)	
10.....	(0, 1, 3, 3.5, 2, 0.5, 0)	
11.....	(6, 22, 33, 26, 11, 2)	
12.....	$125-75\cos\left(\frac{\pi s}{48}\right)$	$-\infty<s<\infty$
13.....	$125-75\cos\left(\frac{\pi s}{48}\right)$	$0<s<96$
14.....	$I_{\min}+(I_{\max}-I_{\min})\sin\left(\frac{2\pi s}{T}\right)$	$0<s<T$
15.....	$\frac{(s/k)^{n-1}\exp(-s/k)}{(n-1)!k}$	$0<s<\infty$
16.....	$\binom{s}{n-1}(1/2)^s$	$0<s<\infty$
17.....	$\binom{s}{3}(1/2)^{s/2}$	$0<s<\infty$
18.....	$\{\binom{s}{1}+\binom{s}{2}\}(1/2)^{(s+1)/2}$	$0<s<\infty$
19.....	$\{\binom{s}{4}+2\binom{s}{5}+\binom{s}{6}\}(1/2)^{(s+1)/2}$	$0<s<\infty$

TABLE 3.—*Daily rainfall and average daily flow, Big Muddy River, Plumfield, Ill. (area 753 sq. mi.), April 1927*[1]

Day	Rain	Runoff	Effective rain	Unit graph	Runoff
	Inches	*Percent*	*Inches*	*Cusecs*	*Cusecs*
1	0.45	15	0.068	1,950	(132)
2	.....	.....	.....	2,590	(176)
3	.....	.....	.....	3,370	(229)
4	.....	.....	.....	3,870	(263)
5	.25	15	.037	3,540	(312)
6	.....	.....	.....	2,470	(264)
7	.16	17	.027	1,310	(167)
8	.38	27	.102	610	(553)
9	.25	320	.080	350	(666)
10	.85	520	.440	160	(1,615)
11	.15	55	.083	80	2,116
12	1.22	72	.880	0	4,201
13	.87	79	.690	.....	6,188
14	1.01	81	.820	.....	8,580
15	.51	83	.423	.....	10,229
16	.58	86	.500	.....	11,481
17	.....	.....	.....	.....	10,924
18	.05	80	.040	.....	9,375
19	.16	81	.130	.....	7,355
20	.04	81	.033	.....	5,196
21	.09	82	.074	.....	3,500
22	.03	82	.025	.....	2,377

[1] SHERMAN, L. K. STREAM FLOW FROM RAINFALL BY THE UNIT-GRAPH METHOD. Engin. News-Rec. 108: 501–505. 1932.

TABLE 4.—*Data for Ashbrook Catchment*

Date and time (hours)	Effective rain	Storm runoff
	Cusecs	*Cusecs*
March 26:		
15	.....	0
	1,829	.....
18	.....	30
	3,530	.....
21	.....	34
	8,330	.....
24	.....	980
March 27:		
3	.....	1,320
6	.....	1,290
9	.....	1,280
12	.....	1,160
15	.....	1,040
18	.....	910
21	.....	790
24	.....	680
March 28:		
3	.....	580
6	.....	480
9	.....	390
12	.....	320
15	.....	280
18	.....	240
21	.....	210
24	.....	180
March 29:		
3	.....	155
6	.....	135
9	.....	115
12	.....	100
15	.....	85
18	.....	70
21	.....	65
24	.....	60

TABLE 4.—*Data for Ashbrook Catchment*—Con.

Date and time (hours)	Effective rain	Storm runoff
March 30:		
3	.....	55
6	.....	50
9	.....	45
12	.....	40
15	.....	35
18	.....	30
21	.....	25
24	.....	15
March 31:		
3	.....	5
6	.....	0

TABLE 5.—*Data on linear channel response*

[μ_0=1st moment; F_0=Froude number; S_0=slope (ft. per mi.); L=length (miles); $K_n=n^{ht}$ cumulant]

Case	μ_0	F_0	S_0	L	K_1	K_2	K_3	K_4
1	2.7058	0.125	1	50	12.3192	63.7364	985.3879	26015.398
2	2.7058	.125	1	200	49.2769	254.9457	3941.5516	104061.60
3	2.7058	.125	1	500	123.1922	637.3643	9853.8788	260153.98
4	2,7058	.125	5	5	1.2319	1.2747	3.9416	20.8123
5	2.7058	.125	5	50	12.3192	12.7473	39.4155	208.1232
6	2.7058	.125	5	200	49.2769	50.9891	157.6621	832.4928
7	2.7058	.125	25	5	1.2319	.2549	.1577	.1665
8	2.7058	.125	25	50	12.3192	2.5494	1.5766	1.6650
9	2.7058	.125	25	200	49.2769	10.1978	6.3065	6.660
10	6.9268	.512	15	5	.4812	.02533	.003718	.001399
11	6.9268	.512	15	50	4.8122	.2533	.03718	.013996
12	6.9268	.512	15	200	19.2489	1.0131	.1487	.0560
13	6.9268	.512	100	5	.4812	.00380	.00008367	.000004724
14	6.9268	.512	100	25	2.4061	.01900	.0004183	.00002362
15	6.9268	.512	100	100	9.6245	.0760	.001673	.00009447
16	6.9268	.512	400	1	.0962	.0001900	.000001046	.00000001476
17	6.9268	.512	400	5	.4812	.0009498	.000005229	.0000000738
18	6.9268	.512	400	10	.9624	.001900	.00001046	.0000001476
19	8.7668	.729	35	5	.3802	.00535	.0001915	.0000289
20	8.7668	.729	35	10	.7604	.01071	.000383	.00005773
21	8.7668	.729	35	25	1.9011	.02677	.0009576	.0001443
22	8.7668	.729	200	1	.0760	.0001874	.000001173	.00000003094
23	8.7668	.729	200	2	.1521	.0003748	.000002346	.00000006188
24	8.7668	.729	200	5	.3802	.0009370	.000005865	.0000001547
25	8.7668	.729	900	1	.0760	.00004164	.00000005793	.0000000003395
26	8.7668	.729	900	2	.1521	.0000833	.0000001159	.0000000006790
27	8.7668	.729	900	5	.3802	.0002082	.0000002897	.00000000170

TABLE 6.—*Characteristics of a standard 100-square-mile basin*[1]

Item	A[2]	B	C[2]
Area (square miles)	10	100	1,000
Channel slope (feet per mile)		100	
Ground slope		400	
Tributary angle		75°	
Drainage density (miles per square mile)		1.25	
Length of overland flow (feet)		2,200	
Stream order		4–5	
Bifurcation ratio		3	
Length ratio		2.5	
Length to center of area (Lca) (miles)		11	
Length of channel (L) (miles)		22	
Width of basin (W) (miles)		9	

[1] DOOGE, J. C. I. SYNTHETIC UNIT HYDROGRAPHS BASED ON TRIANGULAR FLOW. M.S. Thesis. Iowa State Univ. June 1956.

[2] These columns are to be filled in by the user or student in working problems.

TABLE 7.—*Geomorphic parameters of a simulated basin*[1]

Characteristics of drainage pattern:

Designation	No.	Area	Length[2]
		Square miles	*Miles*
Unit watershed	385	0.05	0.33
Sub-subwatershed	49	.35	.87
Subwatershed	7	2.75	2.87
Total watershed	1	21.35	8.09

Channel sizes:

$b=6.79\,A^{0.03}$ $\quad n=0.04$

$z=1.92\,A^{0.06}$ $\quad S=0.003155\,A^{-0.20}$

Surface characteristics for computing overland flow:[3]

800 feet by 1,750 feet = 0.05 sq. mi.
Overland slope . . . . . = 10.2 percent
L . . . . . = 400 ft.
n . . . . . = 0.2
Rising hydrograph by Morgali.
Recession linear.

Assumed conditions for channel routing:

(a) In first-order channels, translation of overland flow to outlet of sub-subwatershed at equilibrium velocity.
(b) Initial flow, 4.9 cusecs/sq. mi.
Channel uniform between junction.
Numerical routing (rectangular grid).

[1] MACHMEIER, R. E., and LARSON, C. L. THE EFFECT OF RUNOFF SUPPLY RATE AND DURATION ON HYDROGRAPHS FOR A MATHEMATICAL WATERSHED MODEL. Jour. Hydraulics Div., Amer. Soc. Agr. Engin. 1966.

[2] $L \sim A^{0.568}$; tributary angle = 45°.

[3] MORGALI, J. R. HYDRAULIC BEHAVIOR OF SMALL DRAINAGE BASINS. Tech. Rept. 30, Dept. Civ. Engin., Stanford Univ. Calif. 1963.

TABLE 8.—*Data on evaporation*[1]

No.	Month	Solar radiation	Average temperature	Average vapor pressure	Average wind	Roughness
		Ly.	*°C.*	*mb.*	*M./sec.*	*Cm.*
1.....	April	734	15	4	2.1	0.001
2.....	April	748	20	4	1.8	.02
3.....	March	532	17	8	1.6	1.0
4.....	June	761	24	6	1.8	.7
5.....	August	625	31	22	1.3	3.0

[1] VAN BAVEL, C. H. M. POTENTIAL EVAPORATION: THE COMBINATION CONCEPT AND ITS EXPERIMENTAL VERIFICATION. Water Resources Res. 2(3): 455–467. 1966.

TABLE 9.—*Data on infiltration*[1]

Time (minutes)	Precipitation	$P-P_e$[2] [3]
	Inches	*Inches*
0	0	0
10	.33	.33
20	.67	.63
30	1.00	.89
40	1.33	1.07
50	1.67	1.20
60	2.00	1.30
70	2.33	1.36
80	2.67	1.43
90	3.00	1.50
100	3.33	1.56
110	3.67	1.63
120	4.00	1.70

[1] MUSGRAVE, G. W., and HOLTAN, H. N. INFILTRATION. *In* Chow, Ven Te, ed., Handbook of Applied Hydrology. New York. 1964.

[2] $P-P_a$=precipitation minus precipitated excess.

[3] Average depth (D_e)=0.32.

TABLE 10.—*Data on inflow and outflow*[1]

Day	Inflow	Outflow
	Cubic feet per second	*Cubic feet per second*
1	93	85
2	137	102
3	208	141
4	320	205
5	442	290
6	546	380
7	630	470
8	678	539
9	691	591
10	692	627
11	684	648
12	671	660
13	657	664
14	638	660
15	609	650
16	577	635
17	534	610
18	484	580
19	426	540
20	366	488
21	298	430
22	235	365
23	183	300
24	137	233
25	103	178
26	81	132
27	75	100

[1] LAWLER, E. A. HYDROLOGY OF FLOW CONTROL. *In* Chow, Ven Te, ed., Handbook of Applied Hydrology. New York. 1964.

TABLE 11.—*Data from experimental watershed*[1]

Outflow volume Q (c.c.)	Time (seconds)	Outflow volume Q (c.c.)	Time (seconds)	Outflow volume Q (c.c.)	Time (seconds)
		$X=1.75$ cc./sec.			
10	46.0	150	193.0	290	277.9
20	65.4	160	199.6	300	283.9
30	82.7	170	206.2	310	289.7
40	93.9	180	212.7	320	295.2
50	105.5	190	218.4	330	301.5
60	116.8	200	224.2	340	307.4
70	127.3	210	231.1	360	317.9
80	137.0	220	237.1	380	329.2
90	146.2	230	242.7	400	341.0
100	154.6	240	248.3	420	353.3
110	162.5	250	254.3	440	364.5
120	170.8	260	261.0	460	376.3
130	178.8	270	267.0	480	387.9
140	185.8	280	272.0	500	399.5
		$X=2.58$ cc./sec.			
10	36.6	110	130.8	210	179.4
20	53.5	120	135.8	220	184.2
30	66.5	130	141.6	230	188.8
40	77.1	140	147.3	240	193.2
50	86.9	150	150.7	250	197.5
60	95.3	160	156.2	260	202.3
70	104.2	170	161.3	270	206.3
80	111.4	180	166.5	280	210.3
90	117.8	190	170.5	290	214.3
100	124.3	200	174.6	300	218.3

See footnote at end of table.

TABLE 11.—*Data from experimental watershed*[1]—Con.

Outflow volume Q (c.c.)	Time (seconds)	Outflow volume Q (c.c.)	Time (seconds)	Outflow volume Q (c.c.)	Time (seconds)
		$X=3.56$ cc./sec.			
10	31.3	200	134.5	390	194.8
20	43.8	210	137.9	400	197.7
30	52.6	220	141.3	420	203.2
40	60.7	230	144.8	440	208.9
50	68.1	240	148.0	460	214.7
60	74.4	250	151.5	480	220.4
70	80.4	260	154.4	500	226.1
80	85.7	270	157.5	520	231.7
90	90.8	280	160.6	540	237.3
100	95.5	290	163.7	560	242.8
110	100.0	300	166.7	580	248.2
120	104.3	310	170.1	600	253.9
130	108.5	320	173.1	620	259.5
140	112.6	330	176.4	640	265.1
150	116.5	340	179.4	660	270.6
160	120.2	350	182.5	680	276.2
170	124.1	360	185.5	700	282.1
180	127.5	370	188.7	720	287.9
190	130.9	380	191.8	740	293.8

[1] AMOROCHO, J., and ORLOB, G. T. NONLINEAR ANALYSIS OF HYDROLOGIC SYSTEMS. Water Resources Center, Contrib. 40, 130 pp. Univ. Calif., Berkeley. 1961.

TABLE 12.—*Data for overland flow*[1]

No.	Length	Slope	Surface	Rain
	Feet	*Feet per foot*		*Inches per hour*
1	12	0.0001	asphalt	3.65
2	72	.005	crushed slate	3.67
3	72	.04	....do	3.66
4	72	.02	turf	1.89
5	72	.04	....do	3.60
6	72	.04	....do	1.89

[1] IZZARD, C. F. HYDRAULICS OF RUNOFF FROM DEVELOPED SURFACES. Highway Res. Bd. (Washington, D.C.) Proc. 26: 129–146. 1946.

TABLE 13.—*Experimental data for overland flow*

[Rising hydrograph: 0–2 min., $i=1.89$ in./hr.; 2–7 min., $i=3.78$ in./hr.; $i=1.94$]

Time	Runoff	Time	Runoff
Minutes	*Inches per hour*	*Minutes*	*Inches per hour*
0	0	0	0
.5	.015	1	.022
1.0	.095	2	.071
1.5	.32	3	.139
2.0	.61	4	.224
2.5	1.13	5	.326
3.0	2.04	6	.441
3.5	2.80	7	.570
4.0	3.27	8	.712
4.5	3.52	9	.866
5.0	3.67	10	1.029
7.0	3.78	11	1.198
		12	1.367
		13	1.529
		14	1.674
		15	1.793
		16	1.880
		17	1.934
		18	1.957

TABLE 14.—*Runoff data for Coshocton watershed 151 (1963)*

Rainfall		Surface runoff		Outflow from 0–12″ soil		Outflow from 12–48″ soil	
Date and time	Rate (inches per hour)	Date and time	Rate (inches per hour)	Date and time	Rate (inches per hour)	Date and time	Rate (inches per hour)
March 19		*March 19*		*March 17*		*March 17*	
0405	0	0409	0	2200	0.000553	2400	0.00277
0432	.11	0411	(1)	*March 18*		*March 18*	
0456	.02	0453	(1)	2000	.000553	2400	.00109
0502	.30	0457	.0031	*March 19*		*March 19*	
0517	.08	0505	.0016	0300	.000553	0530	.00109
0602	.04	0545	0	0500	.000553	0637	.00170
0702	.01	0753	0	0630	.000982	0845	.00170
0757	.04	0803	(1)	0815	.000982	0930	.00277
0802	.12	0825	(1)	0845	.00161	1000	.00831
0827	.07	0845	.0062	0900	.00818	1015	.0101
0832	.24	0905	.0125	0915	.0323	1230	.00670
0847	.28	0925	.0094	0945	.0323	1400	.00519
0902	.32	1005	.0031	1015	.0154	1800	.00387
0907	.48	1025	.0016	1100	.0128	1830	.00387
0947	.12	1105	(1)	1215	.00639	1840	.00514
1717	0	1205	0	1445	.00497	1850	.00670
1752	.14	1715	0	1715	.00349	1900	.0120
1757	.72	1719	(1)	1745	.00497	1930	.0143
1812	.16	1749	(1)	1800	.0214	2015	.0120
1817	2.88	1753	.0156	1810	.0214	2100	.0101
1820	1.00	1805	.0094	1820	.0611	2230	.00670
1824	.15	1809	.0156	1830	.0655	2400	.00519

1832	.50
1837	.17

1811	.0904
1813	.1995
1815	.3570
1821	.2806
1823	.3367
1829	.2136
1833	.1341
1841	.0733
1857	.0312
1921	.0125
1941	.0062
2005	.0031
2045	.0016
2125	(1)
2305	0

1930	.0281
2015	.0241
2100	.0123
2200	.0104
2400	.00639
March 20	
0300	.00349
0600	.00245
1500	.00161
2400	.000982
March 21	
1200	.000553
2400	.000533
March 22	
1200	.000351
2400	.000351
March 23	
0400	.000312
1200	.000234
1800	.000312
2400	.000312
March 24	
1500	.000195
2400	.000195

March 20	
0400	.00387
1030	.00277
2100	.00170
March 21	
0600	.00109
2400	.000669
March 22	
1000	.000380
1300	.000380
1600	.000507
1900	.000507
2400	.000380
March 23	
1200	.000284
1600	.000380
2400	.000380
March 24	
0600	.000284
1500	.000249
2100	.000284
2400	.000284

[1] Trace.

AUTHOR INDEX[1]

Abbott, M. B., *262*
Abramowitz, M., 58, *73*
Ackerman, W. C., 12, *40*
Ackoff, R. L., 3, *40*
American Society of Civil Engineers, 97, *98*, 196, *227*
Amorocho, J., 17, *40*, 96, *98*, 150, *185*, 242, *262*
Ampt, G. A., 276, 279, *294*
Anderssen, A., 121, *125*
Anderson, E. A., 162, *185*
Aseltine, J. A., 12, *40*, 64, *73*, *125*
Ashley, J. R., 177, *185*
Bagley, J. M., 179, *188*
Bakhmeteff, B. A., 52, *54*
Barnes, B. S., 94, *98*, *227*
Barnes, J. L., 20, *41*, 108, *126*, *227*
Bayazit, M., *35*, 122, *125*, *146*
Bear, J., 48, *54*, *179*, 182, *185*, 267, 269, 284, *293*
Becker, A., 156–159, *185*
Beer, S., *40*
Behlke, C. E., *262*
Beightler, C. S., *188*
Bellman, R. E., *40*, 105, 112, *125*
Bender, D. L., 206, *227*
Benson, M. A., 151, 153, *185*
Bernard, M. M., 86, *98*, 204, *227*
Betson, R. P., *227*
Bickley, W. G., 70, *73*
Bittinger, M. W., *286*
Blackwell, W. A., 3, *41*
Blaney, H. F., 46, *54*
Blank, D., 113, *125*
Body, D. N., 33, 35, *40*, 94, *98*, 143, *146*
Boersma, L., *189*
Boughton, W. C., 169, *185*
Bouwer, H., 179, *185*
Bowen, I. S., *54*
Bowers, S. A., *187*
Brakensiek, D. L., 208, *227*, *262*
Brater, E. F., 97, *101*, *266*
Burdoin, A. J., 191, *231*
Carlslaw, H. S., 286, *293*
Cermak, J. E., *186*
Chadwich, D. G., *188*
Chamier, G., *98*, 193, *227*
Chapman, T. G., 291, *293*

---

[1] This index cites all references to authors. An italic page number indicates that details of the reference are to be found on that page.

Chemerenko, E. P., *186*, *263*
Chery, D. L., 183, *186*
Childs, E. C., *54*, 267, 273, 274, 276, *293*
Chorafas, D. N., 35, *40*, 148, *186*
Chow, V. T., 43, *54*, *98*, *186*, 211, *227*, *263*
Clark, C. O., 191, 192, 197, 203, 217, *228*
Clark, J. I., *228*
Close, C. M., *41*
Coleman, G. S., 81, *98*, 193, *228*
Collins, W. T., 30, *40*, 93, *99*
Colman, E. A., *40*, 194
Colorado State University, *54*, 179, 183, *186*, *293*
Committee for Hydrological Research, TNO, *54*
Commons, C. G., 191, 206, 217, *228*
Cooper, H. H., 291, *293*
Corbett, D. M., 43, *54*
Corey, A. T., 272, *295*
Coulter, C. G., 217, 218, 228
Crank, J., 286, *293*
Crawford, N. H., *40*, 162, 166, 180, 185, *186*, *187*
Criddle, W. D., 46, *54*
Cross, W. P., 85, 97, *99*, *187*, *229*
Dalton, J., *54*
Dawdy, D. R., 38, *41*, 168, 174, *186*
DeCoursey, D. G., 208, *228*
Delleur, J. W., 113, *125*
DeRusso, P. M., 12, *41*
Desoer, C. A., 12, *42*
DeWiest, J. M. R., 48, *54*, 284, *293*
Deymie, P., 245, *263*
Diskin, M. H., *32*, *112*, *125*, 182, *186*, *212*
Doebelin, E. O., 3, *41*
Doetsch, G., 64, *73*
Dooge, J. C. I., 17, 32, *41*, 43, *54*, 81, 96, 97, *99*, 105, *117*, *126*, *136*, 190, 193, 199, 210, 217, 221, *228*, 242, *245*, 246, *247*, 248, *263*, 291, *293*
Dorn, W. S., 70, *74*
Draper, C. S., 3, *41*
Drenick, R. F., 3, *41*
Dronkers, J. J., *263*
Dumm, L. D., 286, *293*
Eagleson, P. S., 35, *41*, 43, 44, 45, *54*, 122, *126*, 138, 140, 144, *146*, *186*
Eaton, T. D., 198, 217, *228*
Edson, C. B., 206, 207, *228*
Ellis, D. O., 3, *41*
Erdelyi, A., 65, *73*
Escoffier, E. F., *263*
Escritt, L. B., 81, 83, *99*, 194–196, *228*
Espildora, B., 160, *185*
Ezekiel, M., 151, *186*
Farrell, D., 192
Fiering, M., 149, *186*
Fodor, G., *74*
Forsythe, G. E., *263*

Foskett, L. W., *187*
Foster, E. E., 97, *99*
Fox, G. S., 270, 271, *295*
Fox, L., 67, *74*
Fox, K. A., 151, *186*,
Gardner, M. F., 20, *41*, 108, *126*
Gardner, W. R., 270$_3$ *293*
Garstka, W. U., 44, *54*
Gibbs, A. E., *187*, *188*
Gilcrest, B. R., *263*
Gilman, C. S., 44, *54*
Glover, R. E., *286*, 288
Grace, R. A., 183, *186*
Gray, D. M., 53, *54*, 207, *228*
Green, R. F., *227*
Green, W. H., 276, 279, 280, *294*
Guillemin, E. A., 58, 59, 62, 70, *74*, *126*
Gupta S. C., 12, *41*
Gwinn, W. R., *265*
Hamming, R. W., 62, 70, *74*
Hanks, R. J., 179, *187*, 276, *295*
Harbeck, G. E., 45, *55*
Harder, J. A., 179, *187*
Harding, S. T., *55*
Harley, B. M., 245, 246, 248, *257*, *263*
Harman, H. H., 155, *187*
Harr, M. E., 284, *294*
Harris, B., *187*, *188*
Hart, W. E., 17, *40*, *185*
Harte, C. A., 81, *99*, 193, *228*
Hathaway, G. A., *263*
Hawken, W. H., 81, *99*, 194, *228*
Hayami, S., 52, *55*, 244, *263*
Hedke, C. R., 46
Henderson, F. M., 50, 52, *55*, 193, *229*, 239, *263*, *264*
Hildebrand, F. B., 62, 70, *74*
Holtan, H. N., 48, *55*, *56*, 272, 273, *294*
Holzman, B., 45, *56*
Horton, R. E., 47, 51, *55*, 197, *229*, 234, 236, 243, *264*, 272, 273, *294*
Hoyt, W. G., 75–78, *99*
Huggins, L. F., *187*, *264*
Hullinghorst, D. W., *204*, *217*
International Association of Scientific Hydrology, *55*
Irmay, S., 48, *54*, *185*, 267, 269, 284, *293*, *294*
Iseri, K. T., 45, *55*
Issacson, E. J., *264*
Iwagaki, Y., *264*
Izzard, C. F., 51, *55*, 234, 237, 243, *264*
Jaeger, J. C., 286, *293*
Jens, S. W., *99*, 193, *229*
Johnson, A., 81, *98*, 193, 194, *228*
Johnson, S. M., 218, *229*

Johnstone, D., 85, 97, *99*, *187*, 198, 217, *229*
Judson, C. C., 81, *99*, 193, *229*
Jury, E. I., 64, *74*, *146*
Kalaba, R. E., 125
Kalinin, G. P., 52, 53, *55*, 180, *187*, *244*, 256, 257, *264*
Kartvelishvili, N. A., 149, 179, *186*
Kaufman, H., 65, *74*
Kendall, M. A., 115, *126*
Keulegan, G. H., *264*
Kirkham, D., 285, *294*
Kirpisch, Z. P., *229*
Kiwata, H., *187*
Kleitz, C., *264*
Klute, A., 274, *294*
Koenig, H. E., 3, *41*
Kohler, M. A., 43, *56*, 78, 94, 97, *99*, 155, 157, 158, *187*, *229*
Koloseus, H. J., *186*
Korn, G. A., 58, *74*
Korn, T. M., 58, *74*
Kostiakov, A. N., 47, *55*, 280, 281, *294*
Kraijenhoff van de Leur, D. A., 17, *41*, 286, 288, *294*
Kritskii, S. N., 208, *229*
Kuchment, L. S., 96, *99*, *229*, *264*, *265*
Kuichling, E., 79, *99*, 193, *229*
Kulandaiswamy, V. C., *14*, *146*, *212*, *265*
Lambe, C. G., 67, *74*
Lanczos, C., 62, *74*
Langbein, W. B., 45, *55*, 206, *229*
Larriev, J., 96, *99*
Laten, N. R., *229*
Laurenson, E. M., *229*, *265*
Lee, P., 138, *146*
Lee, Y. W., 3, *41*, 121, *126*, *146*
Lees, S., *41*
Levi, E., 32, *41*, 113, *126*
Levin, A. G., *187*
Liggett, J. A., 240, 241, 243, *265*, *266*
Light, P., 44, *55*
Lighthill, M. J., *265*
Lin, Pin-Nam, *265*
Linsley, R. K., *40*, 43, *56*, 78, 94, 97, *99*, 155, 166, 180, *186*, *187*, 205, *229*, 241, *266*
Little, W. C., *185*
Lloyd-Davies, D. E., 80, *100*, 193, *229*
Lockett, J., *125*
Ludwig, F. J., 3, *41*
Luthin, J. N., 48, *56*, 284, 285, *294*
Lynch, W. A., 3, *42*
Maass, A. A., 149, *187*
McCarthy, G. T., *204*, *244*
McCool, D. K., *265*
McCracken, D. D., 70, *74*
MacFarlane, A. G. J., 3, *42*

McKay, W., *41*
McNown, J. S., *266*
Mamisao, J. P., *183*
March, F., *41*, *126*, *146*
Maruyama, F., 192, 207, 209, *231*
Massau, J., *265*
Masse, P., 245, *265*
Matalas, N. C., 155, *187*
Mayhugh, M. S., 270, *293*
Meinzer, O. E., 97, *100*
Mejia-r, R., *41*, *126*, *146*
Menkel, M. F., 208, *229*
Meyer, O. K., *56*, 244, *265*
Mikawa, H., 192, 207, *230*
Milyukov, P. I., 244, 256, 257, *264*
Minotte, J. S., *229*
Minshall, N. E., 243, *265*
Mitchell, W. D., 205, 218, *229*
Monke, E. J., *187*, *264*
Morgali, J. R., 241, *265*, *266*
Morgan, P. E., 218, *229*
Morgan, R., *204*, 217, 218
Mulvany, T. J., 80, *100*, 193, *229*
Munro, C. H., 81, *100*, 190, 194, 195, *230*
Musgrave, C. W., *56*, *294*
Muskat, M., 284, *294*
Nash, J. E., 17, 31, *42*, 52, *56*, 82, 83, 92, 96, *100*, 105, 113, 115, 116, *126*, 190, 192, 202, 207, 208, 209, 214, 219, 220, *230*, *266*
Negev, M., 166, *187*
Newton, D. W., 143, *146*
O'Donnell, T., 32, 38, *41*, *42*, 103, 104, 108, *126*, 133, 143, *146*, 168, *186*
Ogrosky, H. O., *40*
O'Kelly, J. J., 192, 199, 217, *230*
O'Meara, W., *259*
Orlob, G. T., *40*, 96, *98*, 242, *262*
Ormsby, M. T. M., 81, *100*, 193, *230*
Otaba, K., 169, *187*
Overton, D. E., *56*, 272, 273, 281, *294*
Owen, W. J., *187*, *188*
Papoulis, A., 64, *74*, 104, 108, *126*
Paulhus, J. L. H., *43*, *56*, 78, 94, 97, 99, 155, *187*, *229*
Paynter, H. M., 3, 17, 31, *42*, 112, *126*, *187*, *266*
Penman, H. L., 46, *56*, 162, *188*
Petterssen, S., 44, *56*
Philip, J. R., 48, *56*, 273, 274, 276, 277, 278, 280, *294*, *295*
Polubarinova-Kochina, P. Y., 284, *295*
Prasad, R., 213, 230
Ragan, R. M., *266*
Rainville, E. D., 62, *74*
Rainville, E. D., 62, *74*
Ralston, A., 71, *74*
Raven, F. H., *58*, 70, *74*

Ree, W. O., *265*
Reich, B. M., 53, *56*, *207*
Reid, J., 81, *100*, 194, *230*
Reiher, B. J., *187*
Reilly, T. L., *229*
Remson, I., 270, 271, *295*
Restrepo, J. C. O., *126*, *146*
Richards, L. A., 271, *295*
Richards, M., 158, *188*
Richtmyer, R. D., *266*
Riley, D. W., 81, *100*, 194, *230*
Riley, J. P., 178, *188*
Roberson, J. A., 206, *227*
Roberts, G. E., 65, *74*, 108, *126*
Roche, M., 96, *100*, *147*
Rorabaugh, M. I., 291, *293*
Rosenbrock, H. H., 173, *188*
Ross, C. N., 81, *99*, *100*, 190, 193, 194, *228*, *230*
Rousculp, J. A., 81, *100*, 193, *230*
Roy, R. J., *41*
Rubin, J., 274, *295*
Sato, S., 192, 207, *230*
Schleusener, R. A., 272, *295*
Schonfeld, J. C., *266*
Schulze, F. E., 158, *188*
Schwartz, H. E., 205, 217, *231*
Schwarz, J., *185*
Scott, E. J., 276, *295*
Seddon, A. J., 247, *266*
Sellers, W. D., 45, *56*
Sharp, A. L., 157, *187*, *188*
Shen, J., 38, *42*, 179, *188*
Sherman, L. K., 25, *42*, 84, 93, *100*, 203, *230*
Shipatani, K., *187*
Siebert, W. M., 19, 21, *42*
Singh, K. B., *147*, *211*
Skibitzke, H. E., 179, *188*
Slatyer, R. O., 45, *56*
Smith, W. O., *295*
Sneddon, I. A., 67, *74*
Snyder, I. A., 67, *74*
Snyder, F. F., 204, 205, 218, *230*
Snyder, W. M., 33, 35, *42*, 94, *101*, *147*, 151, 155, *188*
Stall, J. B., 155, *188*
Stark, L., 3, *42*
Stegun, I. A., 58, *73*
Stoker, J. J., *264*, *266*
Stone, L. N., *189*
Strahl, J. A., *188*
Strahler, A. N., 203, *231*
Stuart, A., *126*
Sugawara, M., 168, 169, *188*, 192, 207, 209, *231*

Taylor, A. B., 205, 217, *231*
Thomas, H. A., 250, *266*
Thompson, T. H., 174, *186*
Thompson, W. A., 70, *73*
Thornthwaite, C. W., 45, 46, *56*
TNO[1]
Todd, D. K., 48, *56*, 291, *295*
Tranter, C. J., 67, *74*
Troesch, B. A., *264*
Truxal, J. G., 3, *42*
Turc, L., 47, *57*
Turner, H. M., 191, *231*
Tustin, A., 3, *42*
Tennessee Valley Authority, 169, *188*, *231*
U.S. Bureau of Reclamation, 206, *231*
U.S. Corp of Engineers, *57*, 205, *231*
U.S. Department of Agriculture, *57*
U.S. Department of Agriculture, Soil Conservation Service, 191, 206, 217, 218, *231*
University of Wageningen, *57*
Valdes, R., 32, *41*, 113, *126*
van Bavel, C. H. M., *57*
van Schilfgaarde, J., 48, *57*, 285, *295*
Vasiliev, O. F., *266*
Veihmeyer, F. J., 45, *57*
Vinyard, J. W., 143, *146*
Wade, T. L., 70, *74*
Wasow, W. R., *263*
Whitam, G. B., *265*
Wilde, D. J., 173, *188*
Wilf, H. S., 71, *74*
Williams, E. J., 151, *188*
Williams, G. R., *101*
Williams, H. M., 191, 206, 217, *231*
Wind, G. P., 270, 295
Wisler, C. O., 97, *101*
Wong, S. T., *189*
Woo, D. C., *189*, *266*
Wooding, R. A., 240, *264*, *266*
Woolhiser, D. A., 240, 241, 243, *265*, *266*
World Meteorological Organization, *57*
Wu, I-Pai, 207, 208, 215, *231*
Wymore, A. W., 12, *42*
Yevjevich, V. M., 50, *57*, 151, *189*, 243, *266*
Yu, Y. S., *266*
Zadeh, L. A., 12, *42*
Zaslavsky, D., 48, 54, *185*, 267, 269, 284, *293*
Zoch, R. T., 191, 196, 197, *231*

---

[1] TNO stands for "Organisatie Toegepaft Natuurwetenschappelijk Onderzoek" [Netherlands Organization for Applied Scientific Research]. The abbreviation TNO is invariably used, and the full title does not appear even on publications of the organization.

SUBJECT INDEX

Analog, direct, 178–182
Analog, indirect, 176–178
Analog models, 150, 175–183, 184
Analysis, 10–11
Autocorrelation function, 34, 121, 139, 145
Backward substitution, 131
Bank storage, 291
Barnes method of unit hydrograph derivation, 94–95, 98
Base flow, 16, 49
Base flow separation, 89–93, 98, 289, 292
Catchment as a system, 16–17, 165
Catchment characteristics, 190, 201, 203–204, 209, 214, 222
Catchment model, 37, 165–169
Catchment parameters, 222–223
Catchment response, 165–169, 184, 227
Causal system, 10, 23, 26, 103
Coaxial correlation, 155–160
Collins' method of unit hydrograph derivation, 30, 93, 98
Component, 8, 149
Components of hydrograph, 78
Computational methods 141–144
Continuous convolution, 20–25
Conceptual model, 36–37, 192–193, 209–215, 232, 267, 283
Continuous input (or output), 8
Continuous system, 8
Convolution, continuous, 20–25, 82, 95–96, 102, 195
Convolution, discrete, 25–29, 128
Correlation methods of identification, 33–35
Cross-correlation coefficient, 34, 121, 139, 145
Cumulants, 115–117, 124, 214, 238, 247
Cumulants, dimensionless, 116
Curvilinear regression, 154–155
Darcy's Law, 48, 267
Dawdy-O'Donnell model, 38, 168
Detection of signal, 11
Deterministic hydrology, 1
Deterministic systems, 1, 9
Delta function, 20–21
Differential equations, ordinary, 19, 65–67, 72
Diffusion analogy (flood routing), 52, 253
Diffusion equation (unsaturated flow), 269
Digital simulation, 38, 160–168
Direct analog, 178–182
Direct storm runoff, 15, 165, 190
Discrete convolution, 25–29
Discrete input (or output), 9, 25
Discrete system, 9
Distributed parameters, 9
Distribution graph, 26, 85, 128

Dupuit-Forcheimer assumption, 48, 284, 285, 289
Dynamic hydrology, 1
Effective precipitation, 15, 91
Ellipse equation, 285
Error-sensitivity, 98, 144–145
Evaporation, 15, 45–46, 184
Factor analysis, 204, 223
Feedback, 9, 17
Flood routing, 7
Forward substitution, 33, 94, 130–131, 142, 144
Fourier coefficients, 60, 71, 104, 105, 107, 124, 133
Fourier methods, 20, 60, 62, 104–105
Fourier series, 59–60, 106–107
Fourier transform, 32, 63, 71, 104, 109–112, 124
Frequency analysis, 24
Gamma distribution, 52, 120, 192–193, 206–208, 210, 215
Geomorphology, 204, 217, 223–224
Gibbs oscillations, 127
Glover solution, 286
Granular model, 182
Green-Ampt infiltration formula, 276–277
Green's function, 22
Ground water flow, 48–49, 284–290, 292
Ground water hydrology, 1
Ground water reservoir coefficient, 286
Ground water response, 17, 91, 185, 283–290
Harmonic analysis, 32, 71, 133–134, 143, 145, 146
Hele-Shaw apparatus, 181
Histogram input, 25
Horton-Izzard solution, 51–52, 234–238, 261
Hydraulic diffusivity, 268, 270, 291
Hydrologic cycle, 12–14, 53, 184
Identification by trial and error, 29–30
Identification of system, 10, 22, 29–35, 40, 102–146
Impulse function, 21–22
Impulse response, 21–22, 102, 124
Indirect analog, 176–178
Infiltration, 15, 47–48, 89, 272–282
Infiltration capacity, 272
Infiltration formulas, 272, 292
Influence function, 22
Input, 4, 9–10
Input, discrete, 25
Input, distributed, 22
Input, isolated, 24, 26, 102
Inputs, multiple, 22
Input, periodic, 24–25, 104
Input, quantized, 25–26
Input, sampled, 27
Instantaneous unit hydrograph (IUH), 22, 40, 81–82, 87, 95, 195–196
Inversion, 11
Inversion of transform, 103, 110, 112, 115
Isochrones, 81, 96, 195

Joint regression, 155
Kalinin-Milyukov method, 52, 256–257, 261
Kernel function, 22
Kinematic wave solution, 239, 261
Kleitz-Seddon Law, 247
Kronecker delta, 59, 60
Lag and route method, 52, 255–256, 261
Lag time, 202, 224
Laguerre analysis, 32, 43, 71, 117–121, 136
Laguerre coefficients, 118, 124
Laguerre functions, 61, 71, 105, 116
Laplace transform, 20, 63–64, 66–67, 71, 246–247
Laplace transform method of identification, 31, 104–105, 111–113, 124, 135
Least squares and time series analysis, 122, 140–141
Least squares method of identification, 33, 73, 94, 131–133, 145
Least squares optimization of parameters, 170
Limiting rate of evaporation, 272, 291
Linear channel response, 246–248, 261
Linear programing, 143
Linear theory, 1, 8, 16–18, 40, 49, 85, 283
Linearized system, 211, 245, 285–286
Linkage equation, 103
Linkage equation (Fourier and Laplace transforms), 109, 111, 135
Linkage equation (Fourier series analysis), 107, 134–135
Linkage equation (Laguerre analysis), 119, 120
Linkage equation (moments and cumulants), 114–115, 116
Lumped parameters, 9, 19
Lumped system, 9, 15, 19
Matrices, 67–70
Matrix form of convolution, 28–29, 128–129
Matrix methods, 72–73, 98
Meixner functions, 62, 71, 137, 143, 145–146
Memory, 8, 23, 26, 106
Model, 148, 149
Model, conceptual, 148
Moments, 62, 70, 71, 105, 113–115, 124
Moments as catchment characteristics, 31, 203
Moments, dimensionless, 116, 210, 220–221, 224
Moments, matching, 170–171, 213, 287
Morphology of catchments, 204
Multiple inputs, 22
Multiple linear regression, 151–153
Multivariable analysis, 155
Muskingum method, 40, 52, 254, 257, 261
Muskingum model (generalized), 212–213, 227
Nonlinear system, 17, 35, 85, 232
Nonlinear theory, 1, 8, 50–51
Numerical methods, 70, 73, 241, 244, 260–261
Open channel flow, 243–260
Optimization, 38, 169–174
Optimum linear response, 122
Ordinary differential equations, 19, 65–67
Orthogonal functions, 19, 58–64, 71

Output, 9–10
Overland flow, 50–52, 232–242
Parameter optimization, 83, 149, 150, 166, 169–174
Parameters, significance of, 172
Parametric hydrology, 1, 83
Partial differential equations, 67, 72
Pearson type I distribution, 224
Pearson type III, distribution, 191, 224
Pearson type V, 208, 224
Percolation, steady, 271
Philip's infiltration theory, 277–278
Physical scale models, 183
Polynomial regression, 154–155
Precipitation, 15, 44–45
Precipitation excess, 15, 89, 190
Prediction, 11, 21, 39, 95
Probabilistic systems, 9
Pulse, 25
Pulse response, 25, 73, 127, 142, 145
Quantized input (or output), 9, 25
Rational method, 79–84, 95, 190
Realizable system, 10
Recession, 78, 89–92, 237, 239, 261, 292
Reference discharge, 250–251
Regression models, 151–159, 184
Reservoir, linear, 72, 176, 192, 207, 210, 215–231
Reservoir, nonlinear, 213–238
Response time, 15
Rising hydrograph, 236, 239, 261
Routing a flood, 7, 52–53, 244
Run-off hydrograph, 75–78
Saturated zone, 17
Scale models, 182
Shape factors, 116, 223, 227
S-hydrograph, 39, 86
Signal detection, 11
Simulation, 7, 20–38, 43, 148–189
Simulation, analog, 39
Simulation, digital, 38
Simultaneous equations, 93–94
Snyder's synthetic method, 205–206
Snowmelt simulation, 160–162, 185
Soil moisture characteristic curve, 268
Soil phase of cycle, 267–282
Soil storage, 17
Stable system, 10
Standard catchment, 217–218
Stanford model, 37–38, 166–167
State of a system, 8, 13–14
Stochastic systems, 149, 208
Storage elements, linear, 72, 165
Subsystem, 8

Superposition, 7, 8, 17–19, 82, 84, 102
Superposition, integral, 23
Surface water hydrology, 1
Synthesis, 7, 12, 22, 148
Synthetic scheme (general), 219, 220–221
Synthetic unit hydrograph, 82, 149, 190–231
System, definition of, 3–4
System identification, 10–11, 22, 29–35, 39
System operation, 4–7, 10
Systems approach, 2–7, 17, 39, 43, 77, 96
Systems terminology, 8, 40
Terminology, systems, 8, 40
Threshold in system, 15, 17, 158, 165, 175
Time-arep-concentration curve, 81–82, 192, 195, 197, 214
Time-area-diagram, 80–81
Time-area methods, 80–82, 95, 97, 190, 193–199
Time-invariance, 8–9, 19, 40, 85, 102
Time-invariant system, 8–9, 18
Time of concentration, 80
Time scale in Laguerre analysis, 120
Time series analysis, 33–35, 120, 138–141, 143–144
Time transformation, 208, 223
Transform methods of system identification, 30–33, 102–120, 133–138, 143
Transpiration, 15, 46–47, 162–164, 184
Truncation of unit hydrograph, 220, 227
Uniform nonlinearity, 242–243
Unit hydrograph, 6–7, 10, 15, 16, 39, 184
Unit hydrograph concepts, 84–88
Unit hydrograph derivation (classical), 29–30
Unit hydrograph, finite period, 25–26, 27, 73, 87, 95, 97, 127, 135
Unit hydrograph, instantaneous, 39, 83, 87, 93, 95, 97, 135
Unit hydrograph parameters, 202–203
Unrealistic ordinates, 143, 145
Unsaturated permeability, 269–270
Unsaturated zone, 1
Verification of model, 149
Virtual channel inflow, 197
Wave equation, linear, 72, 73
Wiener-Hopf equation, 124, 140, 144, 145–146
Z-transform, 64, 71, 125, 145–146

☆ U.S. GOVERNMENT PRINTING OFFICE: 1973 O—491-470