Supplied by U.S. Dept. of Agriculture
National Center for Agricultural
Utilization Research, Peoria, Illinois

7655

ELSEVIER

Journal of Chromatography A, 750 (1996) 201–207

JOURNAL OF
CHROMATOGRAPHY A

Fat content for nutritional labeling by supercritical fluid extraction and an on-line lipase catalyzed reaction

Janet M. Snyder*, Jerry W. King, Michael A. Jackson

Food Quality and Safety Research Unit, National Center for Agricultural Utilization Research, Agricultural Research Service, US Department of Agriculture, 1815 N. University Street, Peoria, IL 61604, USA

Abstract

A method using sequential supercritical fluid extraction (SFE) and enzymatic transesterification has been developed for the rapid determination of total nutritional fat content in meat samples. SFE conditions of 12.16 MPa and 50°C were utilized to extract lipid species from the sample matrix. The enzymatic transesterification of the lipids by methanol was catalyzed by an immobilized lipase isolated from *Candida antarctica*. Conversion of the triglycerides to fatty acid methyl esters was monitored by supercritical fluid chromatography, while the fatty acid content of the extract was determined by capillary gas chromatography (GC). Total fat, saturated fat and monounsaturated fat contents were calculated from the GC data and compared to values from traditional extraction and lipid determination methods. Both off-line SFE and automated SFE followed by on-line GC analysis using two different instruments were utilized in this study. The enzymatic-based SFE method gave comparable results to the organic solvent extraction-based method followed by conventional BF_3-catalyzed esterification.

Keywords: Food analysis; Sample preparation; Derivatization, GC; Fats; Lipids; Fatty acid methyl esters

1. Introduction

The definition of fat as determined for nutritional labeling purposes has been established by the Nutritional Labeling and Education Act (NLEA) as the sum of fatty acids from mono-, di- and triglycerides, free fatty acids, phospholipid fatty acids and sterol fatty acids, stoichiometrically expressed as triglycerides [1]. In an effort to determine which methods would comply with NLEA, Carpenter et al. [2] reviewed the methods used for the analysis of fat in various matrices. The NLEA protocol for fat consists of the following steps: (1) an acid or base hydrolysis for producing free fatty acids from the lipid constituents and for releasing bound lipids from the food matrix; (2) solvent extraction of the hydrolyzed fat; (3) the preparation of fatty acid methyl esters (FAMEs) for analysis by gas chromatography (GC) [3–5]. The percent saturated, monounsaturated and total fat are then calculated from the resulting FAMEs profile and expressed as triglycerides [2–6]. The effectiveness of the above method relies on the complete extraction of fat, fatty acids, as well as, accurate measurement of the individual fatty acids [6].

Concurrent with requirements of more extensive food analysis, regulatory protocols and economics have called for a reduction in solvent usage in analytical laboratories; therefore alternative methods for extraction and analyte isolation using little or no solvent, i.e., solid-phase extraction, microwave extraction and supercritical fluid extraction (SFE) use

*Corresponding author.

0021-9673/96/$15.00 Published by Elsevier Science B.V.
PII S0021-9673(96)00354-8

techniques which hold considerable promise for use in the future [7]. The SFE of lipids from various food matrices has been successfully demonstrated by several researchers [8–11]. In particular, Lemke and Engelhardt [12] have reported the determination of total fat by SFE from acid-hydrolyzed meat and cheese samples, and demonstrated that the method is a potential alternative to solvent extraction.

Analysis of the FAMEs from processed foods and fish was simplified by the one-step extraction/methanolysis reported by Ulberth and Henninger [13,14]. A one-step method using supercritical fluid reaction (SFR) has also been utilized to extract and derivatize chlorophenoxyacetic acids as their methyl esters for GC analysis [15]. The success of lipase-catalyzed reactions of lipids under supercritical fluid conditions [16–18] suggested that such reactions could have utility in analytical chemistry. This concept has been demonstrated to a limited extent by Berg et al. [19] and Ghazali et al. [20].

This paper reports the modifications of an SFE–SFR method developed by Jackson and King [18] for the synthesis of FAMEs into a method for the purpose of analyzing specifically for nutritional fat levels in food products. From the resultant FAME derivatives, total fat, saturated fat and monounsaturated fat content of the meat samples were quantitatively determined according to the NLEA protocol. In addition, the method has been modified to allow the determination of fat with an automated extraction/chromatography system.

2. Experimental

Fig. 1 is a schematic of the system used for the off-line sample preparation, hereafter referred to as Method 1. In this system, carbon dioxide was pumped using Isco Model 100DX syringe pumps (Isco, Lincoln, NE, USA) operating in a continuous flow mode. Methanol was added to the CO_2 stream by a third Model 100DX syringe pump. Collection of the extracted and derivatized material was made into an open vial.

An automated system was also developed using a Hewlett-Packard Model 7680T SFE unit (Hewlett-Packard, Wilmington, DE, USA) in tandem with a Hewlett Packard 'bridge' system, connected on-line with a Hewlett Packard Model 5890 II GC. This approach is referred to as Method 2 (Fig. 2).

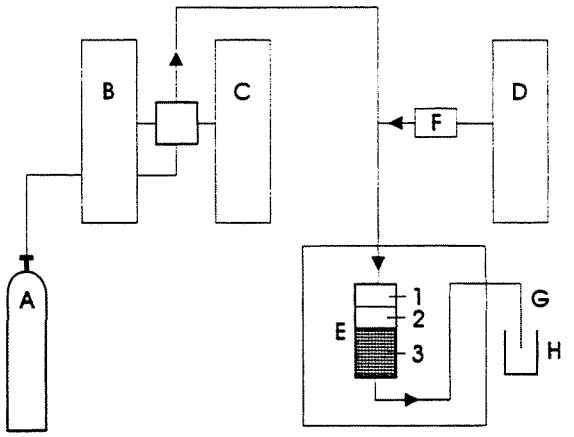

Fig. 1. Schematic of supercritical fluid extraction system. Method 1: (A), CO_2 tank; (B) and (C), CO_2 pumps; (D), methanol pump; (E), extraction vessel; (F), check valve; (G), heated restrictor; (H), collection vial; (1), sample; (2), glass wool; (3), lipase.

The nine meat samples that were used were prepared by the Department of Meat Science at the University of Illinois. These included three ground beef samples, processed to be extremely homogeneous having fat levels of approximately 10%, 20% and 30% (w/w). The beef samples were prepared from beef trimmings which were ground through a 13 mm plate, mixed and reground through a 3 mm plate, and homogenized in a bowl mixer. Three

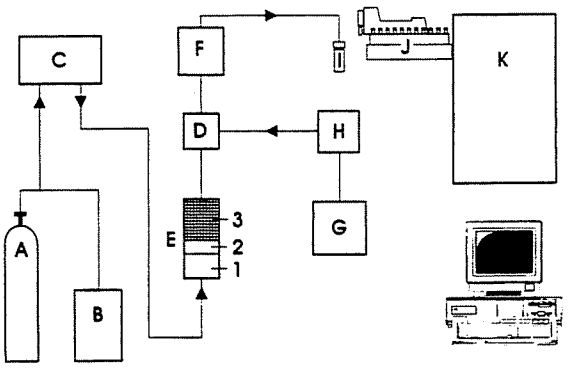

Fig. 2. Schematic of automated supercritical fluid extraction–GC system. Method 2: (A), CO_2 tank; (B), HPLC pump for addition of solvent; (C), high pressure pump; (D), valve; (E), extraction vessel; (F), analyte trap; (G), hexane; (H), solvent pump; (I), collection vial in tray; (J), robotic arm; (K), GC, (1), sample; (2), glass wool; (3), lipase.

sausage-type meat products were prepared from chopped meats that were treated with a 2% salt, 0.015% $NaNO_2$ and 0.3% tripolyphosphate solution, then treated in a smoking chamber and ground to a fine homogenous material using the same protocol as the ground beef. The sausage samples had approximate fat levels of 10, 15 and 20% (w/w). Cured meat samples were prepared from pork with a 2% salt, 0.015% nitrite, 0.3% tripolyphosphate solution and some spices. These samples were then smoked, chopped and homogenized as above. The cured meat samples included two ham samples blended to yield about 10 and 15% fat levels and a high fat sample (bacon) containing approximately 40% total fat.

Meat samples were prepared for extraction by slicing the frozen meat into thin strips. Approximately 100 mg or 500 mg of each sample were lyophilized for 30 min using an FTS Systems Model FD-1-54A lyophilizer (Stone Ridge, NY, USA).

Novozym 435 enzyme was purchased from Novo Nordisk (Franklinton, NC, USA). High-performance liquid chromatography (HPLC)-grade methanol was from Fisher Scientific (Pittsburgh, PA, USA). Triundecanoin and the FAME standards were obtained from Nu Chek Prep (Elysian, MN, USA). SFE-grade CO_2 was purchased from Air Products (Allentown, PA, USA).

With Method 1, the off-line procedure, Novozym 435 (500 mg), was placed into a 5 ml extraction cell. Glass wool was inserted into the cell followed by the dried meat sample (original weight of 100 mg) and 20 μg of triundecanoin as the internal standard. The glass wool partition in the reaction cell prevented contamination of the enzyme by the meat, allowing for its recovery and reuse. The extraction cell was then inserted into the Isco SFX 2-10 extractor (Fig. 1). SFE conditions were 17.24 MPa and 50°C; CO_2 flow-rate was 0.75 ml/min, while the methanol flow-rate was 5 μl/min [18]. Top-to-bottom flow through the cell for 30 min permitted methanolysis to be achieved on the extracted lipids. The synthesized FAMEs were collected in hexane after decompressing the flowing CO_2 into an open vial. The extracted derivatized sample was then weighed after hexane removal using a stream of nitrogen.

Completeness of methanolysis reaction was determined using a Lee Series 600 supercritical fluid chromatograph (SFC) (Dionex, Salt Lake City, UT, USA) with a Dionex SB-Octyl-50 capillary column (10 m×100 μm, 0.5 μm film thickness). The pressure gradient program utilized was as follows: 12.15 MPa isobaric hold for 5min, followed by a pressure increase to 30.40 MPa at 0.81 MPa/min. A corresponding temperature program was conducted with the pressure program as follows: the temperature was initially held at 100°C for 5 min, then programmed to 190°C at 8°C/min. A time/split automatic injection using a Valco valve (Valco, Houston, TX, USA) was used for 1.8 s to inject the sample from a 200 nl internal injection loop. A flame ionization detector (FID) was used as the detector utilizing a temperature of 350°C.

Total fat, saturated fat and monounsaturated fat content were determined from the analysis of the resulting FAMEs using a Hewlett-Packard 5890 Series II GC incorporating a Supelco SP-2340 (60 m×0.25 mm, 0.2 μm film thickness) (Supelco, Bellefonte, PA, USA) column. The injector and FID temperatures were 235°C and 250°C, respectively. The GC oven temperature was held at 100°C for 5 min and then programmed to 200°C at 3°C/min for the FAME analysis. Helium was used as the carrier gas at a flow-rate of 1 ml/min. Column head pressure was held constant at 0.14 MPa.

In Method 2, the methyl esters were performed on-line with the aid of an automated SFE–SFR–GC system (Fig. 2). Here the larger of the two dried meat samples, (original weight 500 mg), and 1.25 mg triundecanoin were placed into a 7 ml extraction cell followed by a glass wool plug and 2 g Novozym 435. The above extraction/reaction conditions of 17.24 MPa and 50°C were used with the CO_2 flow-rate of 1 ml/min and 1% of cosolvent as supplied by a Hewlett-Packard 1050 HPLC pump. Since Jackson and King [18] determined that the flow-rate of methanol at 5 μl/min was critical to avoid inhibition of the enzyme, the Hewlett-Packard 7680T system was programmed to deliver a ratio of 1% of a mixture of methanol–hexane (50:50, v/v) as a cosolvent flow to achieve the requisite 5 μl/min methanol flow-rate, bottom-to-top, through the extraction vessel. The synthesized FAMEs were collected on an octadecyl-treated silica trap at 30°C, followed by 1 ml hexane rinse into a 1.8 ml vial, holding the trap temperature at 50°C. Utilizing the Hewlett-Packard 'bridge system' software, the

robotic arm from the GC secured the vial with the derivatized extract from the extractor and placed the vial with the derivatized extract from the extractor in the position in the autoinjector sample tray of the GC for FAME analysis. Conditions listed above were used for the GC analysis as required for the calculation of the fat content calculation. Also, identical conditions for the above off-line Method 1 were used for SFC analysis of the automated Method 2.

Analysis of total fat, saturated fat and monounsaturated fat content was also determined independently by Medallion Laboratories (Minneapolis, MN, USA) utilizing a method developed by House and colleagues [6] which includes the mandated features of the NLEA nutritional fat protocol namely: acid hydrolysis, conventional solvent extraction, with preparation of the FAMEs using BF_3, followed by GC analysis. The solvent used in this method was ethyl ether; hydrolysis was performed with 6 *M* hydrochloric acid.

Statistical analysis of the data was accomplished using SAS/STAT software [21].

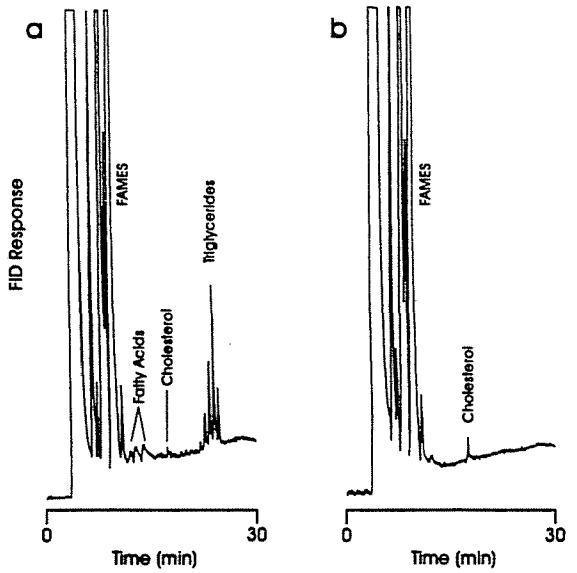

Fig. 3. SFC analyses of reaction components from (a) a beef sample that was not dried before SFE–SFR and (b) a beef sample that was freeze-dried before SFE–SFR.

3. Results and discussion

Initially, samples were not freeze-dried to test the effect of moisture on the SFE and the subsequent conversion of the extract to FAMEs. Excess moisture content has been reported to inhibit the SFE of lipids from food matrices using supercritical carbon dioxide [7]. Also, the enzymatic activity can be inhibited by excessive moisture [18]. Using the extraction/reaction conditions given in the Section 2, we found that the reaction did not go to completion when the samples were not dried, yielding a concentration of fatty acids between 1–5%, and unconverted triglycerides (2–10%) as determined by SFC (Fig. 3a). When the samples were dried prior to SFE, the Novozym 435 enzyme could be reused for at least 25 extractions without a decrease in activity. After extraction and enzyme-catalyzed methanolysis followed by analysis of the extract by SFC, we found the conversion of the triglycerides to methyl esters to be 99.5% or better (Fig. 3b).

Extracted fats from Method 1 were weighed to determine recovery data on a gravimetric basis. However, as shown in previous studies, recovery values are not always accurate when determined via gravimetry, because of the extraction of water and coextracted material along with the extracted fat [22]. Therefore, we attempted to approximate the total fat from the weight of the extracted methyl esters (Table 1).

A comparison of the extraction and subsequent derivatization methods is shown in Table 2, where the resultant fatty acid compositions of three different types of meat samples, bacon, ham and beef are presented for the three techniques. The values for the

Table 1
Gravimetric determination of total fat content from meat samples

Sample	Total fat (%)[a]
Bacon	39.7
Beef (low)	14.9
Beef (medium)	23.5
Beef (high)	36.0
Ham (low)	15.7
Ham (high)	20.3
Sausage (low)	14.0
Sausage (medium)	19.4
Sausage (high)	24.6

[a] Determined from extracted fat mass as FAMEs/original mass; $n=3$.

Table 2
Comparison of the fatty acid composition from two SFE–SFR methods and conventional solvent extraction

Fatty acid	Bacon			Ham Fatty acid (%)			Beef		
	Method 1[a]	Method 2[b]	Solvent[c]	Method 1[a]	Method 2[b]	Solvent[c]	Method 1[a]	Method 2[b]	Solvent[c]
C10:0	0.11	0.11	0.08	0.00	0.11	0.08	0.09	0.08	0.07
C12:0	0.09	0.09	0.07	0.00	0.10	0.07	0.12	0.08	0.09
C14:0	1.38	1.42	1.25	1.52	1.64	1.34	3.84	3.21	3.29
C14:1	0.04	0.04	0.02	0.03	0.06	0.06	1.16	0.92	0.89
C15:0	0.03	0.03	0.02	0.16	0.09	0.04	0.72	0.53	0.63
C16:0	24.55	24.61	24.52	24.82	24.57	24.55	25.56	26.50	25.71
C16:1	3.01	3.34	2.81	2.45	3.61	2.90	4.23	4.89	3.83
C17:0	0.20	0.24	0.20	0.22	0.51	0.24	1.57	1.28	1.60
C17:1	0.20	0.24	0.19	0.21	0.50	0.21	1.35	1.13	1.27
C18:0	11.22	11.24	11.17	11.79	11.87	11.80	13.94	13.69	14.35
C18:1c	46.21	46.12	46.78	46.64	46.41	46.56	41.78	41.29	40.60
C18:2t	0.78	0.62	0.16	0.18	0.78	0.31	1.69	2.35	2.96
C18:2	10.05	9.76	10.36	10.00	7.84	9.31	2.65	3.12	3.29
C18:3	0.22	0.19	0.52	0.42	0.16	0.37	0.58	0.13	0.61
C20:0	0.54	0.53	0.18	0.18	0.39	0.16	0.10	0.25	0.09
C20:1	0.78	0.78	0.74	0.92	0.77	0.78	0.57	0.41	0.19
C20:2	0.41	0.43	0.50	0.37	0.35	0.37	0.16	0.08	0.08
C20:3	0.18	0.19	0.16	ND[d]	0.21	0.08	0.12	0.09	0.12
C22:1	ND[d]	ND[d]	0.07	ND[d]	ND[d]	0.12	ND[d]	ND[d]	0.26
S.D.	0.018 [e]	0.036 [e]	0.012 [e]	0.161[f]	0.174[f]	0.145[f]	0.259[g]	0.403[g]	0.103[g]

[a] Method 1=Simultaneous supercritical extraction/enzyme reaction with off-line GC analysis.
[b] Method 2=Simultaneous supercritical extraction/enzyme reaction with automated GC analysis.
[c] Using solvent extraction as reported by House et al. [6].
[d] ND=not detected.
[e] Each Standard Deviation value is an average of 3 extractions.
[f] Each Standard Deviation value is an average of 6 extractions (3 extractions at 2 fat levels).
[g] Each Standard Deviation value is an average of 9 extractions (3 extractions at 3 fat levels).

ham samples were from both low ham and high ham samples resulting in an average of six extractions. The values for the beef were from all three beef samples and the values are an average of nine extractions. The fatty acid composition did not depend on the fat content of these meat samples. Overall, there is good agreement between the three techniques; only in some of the minor fatty acid constituents is there any significant difference. These differences are random and indicate that there is no apparent discrimination against any particular fatty acid. Also, the calculations of the different types of fat are relatively unaffected due to the small magnitude of these minor constituents.

Fat, saturated fat and monounsaturated fat content as determined from GC FAME data by both SFE–SFR methods and the traditional solvent/derivatization methods are compared in Tables 3–5. Using a statistical analysis of variance to compare the means of any two methods, we found no significant difference at $p>0.01$ in the % total fat as measured by each method. There were some minor differences in the calculation of % saturated fat and % monounsaturated fat in the meat samples between both of the SFR-based methods and the solvent method.

Differences within each meat type were compared by t-tests of the least square means at $p>0.01$. When individual meat samples were compared, there was no difference in the total fat content among the three methods for six of the meat types, but there was a significant difference between the two SFR methods and the solvent method for the values associated with the medium sausage sample (Table 3). There was a difference between Method 1 and the solvent method

Table 3
Comparison of % total fat results from two SFE–SFR methods and conventional solvent extraction

Sample	% Total Fat (R.S.D.)[a]		
	Method 1[b]	Method 2[c]	Solvent[d]
Bacon	40.9(2.8)a[e]	39.4(3.4)ab	38.7(1.7)b
Beef (low)	11.5(4.8)a	11.2(5.5)a	12.8(5.6)a
Beef (medium)	22.1(1.6)a	20.6(2.3)a	21.8(4.5)a
Beef (high)	29.4(5.3)a	28.8(1.2)a	28.6(3.7)a
Ham (low)	10.2(7.6)a	9.9(5.5)a	10.0(3.0)a
Ham (high)	16.5(3.1)a	16.5(4.1)a	17.1(0.8)a
Sausage (low)	10.0(3.8)ab	11.1(6.8)a	9.1(2.3)b
Sausage (medium)	15.6(3.9)a	15.8(3.7)a	13.9(3.3)b
Sausage (high)	21.6(2.1)a	20.6(6.1)a	20.3(2.2)a

[a] (R.S.D.)=Relative standard deviation of $n=3$.
[b] Method 1=Simultaneous supercritical extraction/enzyme reaction with off-line GC analysis.
[c] Method 2=Simultaneous supercritical extraction/enzyme reaction with automated GC analysis.
[d] Using solvent extraction as reported by House et al. [6].
[e] Values with different letters in each row are significantly different at $p>0.01$ level

for the bacon sample and also a significant difference between Method 2 and the solvent method for the low sausage sample (Table 3). No differences were found in the mean values for saturated fat content in the bacon, low and medium beef and low ham samples. Saturated fat content differed between one

Table 4
Comparison of % saturated fat from two SFE–SFR methods and conventional solvent extraction

Sample	% Saturated Fat (R.S.D.)[a]		
	Method 1[b]	Method 2[c]	Solvent[d]
Bacon	14.4(3.5)a[e]	14.9(4.1)a	14.0(1.5)a
Beef (low)	5.3(5.5)a	5.1(5.8)a	5.6(4.2)a
Beef (medium)	9.9(2.7)a	9.8(7.3)a	9.6(3.8)a
Beef (high)	13.6(8.4)ab	14.0(3.3)a	12.7(3.2)b
Ham (low)	3.8(8.3)a	4.2(6.3)a	3.7(2.5)a
Ham (high)	5.1(5.4)a	6.3(4.0)b	6.3(1.2)b
Sausage (low)	3.7(2.6)a	5.0(5.1)b	3.5(2.3)a
Sausage (medium)	6.1(2.2)a	7.4(5.7)b	5.3(3.6)a
Sausage (high)	9.0(0.6)a	8.8(7.5)a	7.9(2.4)b

[a] (R.S.D.)=Relative standard deviation of $n=3$.
[b] Method 1=Simultaneous supercritical extraction/enzyme reaction with off-line GC analysis.
[c] Method 2=Simultaneous supercritical extraction/enzyme reaction with automated GC analysis.
[d] Using solvent extraction as reported by House et al. [6].
[e] Values with different letters in each row are significantly different at $p>0.01$ level.

Table 5
Comparison of % monounsaturated fat from two SFE–SFR methods and conventional solvent extraction

Sample	% Monounsaturated Fat (R.S.D.)[a]		
	Method 1[b]	Method 2[c]	Solvent[d]
Bacon	18.4(2.2)a[e]	18.6(2.7)a	18.5(1.6)a
Beef (low)	5.7(3.8)a	5.4(5.3)a	5.7(4.9)a
Beef (medium)	11.0(4.8)a	9.6(2.8)b	9.6(3.6)b
Beef (high)	14.7(8.3)a	14.1(3.5)a	12.5(2.4)b
Ham (low)	4.8(6.7)a	4.4(2.6)a	4.9(2.5)a
Ham (high)	7.3(5.8)a	8.1(1.9)b	8.1(0.7)b
Sausage (low)	4.5(5.1)a	5.6(6.2)b	4.2(2.1)a
Sausage (medium)	7.6(3.6)a	7.5(3.4)a	6.5(3.4)b
Sausage (high)	10.7(1.2)a	10.8(6.3)a	9.6(2.3)b

[a] (R.S.D.)=Relative standard deviation of $n=3$.
[b] Method 1=Simultaneous supercritical extraction/enzyme reaction with off-line GC analysis.
[c] Method 2=Simultaneous supercritical extraction/enzyme reaction with automated GC analysis.
[d] Using solvent extraction as reported by House et al. [6].
[e] Values with different letters in each row are significantly different at $p>0.01$ level.

of the three methods for five of the nine meat types as noted in Table 4. Monounsaturated fat values of bacon, low fat beef sample and low fat ham samples were not significantly different among the three methods. There were some statistical differences between one of the three methods for the monounsaturated fat content of the other meat types, as noted in Table 5.

When the gravimetric determination of fat content from Table 1 was compared to the total fat from Table 3, the gravimetric values (Table 1) were consistently higher than the values determined by GC FAME analysis (Table 3), only the mass of the fat from the bacon sample with the highest fat content was similar to the NLEA value for total fat as reported in Table 3. This indicated that simple gravimetric determination of the FAME extract, or fat extracts from solvent or SFE, yielded inaccurate values for % total fat in food matrices [23], i.e., an analytical method specific for lipid moieties (fatty acids) is required.

Each listed value by each separate method represents an average of three extractions. The associated precision in this case is reported as the relative standard deviation (R.S.D.) in Tables 3–5. The precision of both SFE–SFR extraction/analyses was comparable as indicated by their corresponding

R.S.D. values, the R.S.D.s of most samples being less than 7% (Tables 3–5). However, R.S.D.s for Method 1 were higher than 7% for the saturated fat content from the high fat beef sample and low ham sample and for the monounsaturated content in the high beef sample. The reason for these outliers is not apparent. The precision of the SFE–SFR results in general is slightly higher than those for the solvent extraction results, probably due to the small sample size employed in the supercritical fluid-based methods. The agreement between the SFE-based methods and the solvent extraction-based method indicates that SFE is extracting the total fat content of the meat samples, as defined by NLEA, and this is confirmed by the agreement in FAME analysis by GC, whatever the source of the constituent fatty acids.

In conclusion, the techniques developed here show considerable promise as alternative, relative solvent-free methods for the analysis of fat as mandated by the new NLEA. On one system, extraction and simultaneous derivative formation can both be accomplished using a commercial SFE module. Alternatively, another system is offered which permits simultaneous extraction and enzymatic hydrolysis of lipid moieties, on-line and automatically, with a commercial SFE system in tandem with a GC. The results obtained for total, saturated and monounsaturated fat content from different meat matrices are in good agreement with those obtained from a conventional hydrolysis and solvent-based extraction protocol.

Acknowledgments

We wish to thank F. McKeith and C. Stites of the Department of Meat Science, University of Illinois, for the preparation of the meat samples, T.C. Nelson, Statistician, Midwest Area/ARS/USDA, Peoria, IL, for the statistical analysis of the data and J.J. Vorhauer for technical assistance.

References

[1] Federal Register, U.S. Government Printing Office. Vol. 58, 1993, pp. 631–2964.
[2] D.E. Carpenter, J. Ngeh-Ngwainbi and S. Lee, 'Lipid Analysis' in D.M. Sullivan and D.E. Carpenter (Editors), Methods of Analysis for Nutritional Labeling, AOAC International, Arlington, VA, 1993, pp. 85–104.
[3] Official Methods of Analysis, 15th ed., AOAC International, Arlington, VA, 1990.
[4] Official Methods and Recommended Practices of the American Oil Chemists Society, 3rd ed., AOCS, Champaign, IL, 1987.
[5] Approved Methods of the American Association of Cereal Chemists, 8th ed., The Association, St. Paul, MN, 1983.
[6] S.D. House, P.A. Larson, R.R. Johnson, J.W. DeVries and D.L. Martin, J. Assoc. Off. Anal. Chem., 77 (1994) 960–965.
[7] J.W. King and M.L. Hopper, J. Assoc. Off. Anal. Chem. Int., 75 (1992) 375–378.
[8] J.W. King, J.H. Johnson and J.F. Friedreich, J. Agric. Food Chem., 37 (1989) 951–954.
[9] G.W. Froning, F. Fieman, R.L. Wehling, S.L. Cuppett and L. Niemann, Poultry Sci., 73 (1994) 571–575.
[10] R.J. Maxwell, J. Assoc. Off. Anal. Chem., 70 (1987) 74–77.
[11] J.P. Friedreich and G.R. List, J. Agric. Food Chem., 30 (1982) 192–193.
[12] P. Lemke and H. Engelhardt, Chromatographia, 35 (1993) 509–516.
[13] F. Ulberth and M. Henninger, J. Am. Oil Chem. Soc., 69 (1992) 174–177.
[14] F. Ulberth and M. Henninger, Fat Sci. Technol., 97 (1995) 77–80.
[15] M.Y. Croft, E.J. Murby and R.J. Wells, Anal. Chem., 66 (1994) 4459–4465.
[16] A.K. Shishikura, K. Fujimoto, T. Suzuki and K. Arai, J. Am. Oil Chem. Soc., 71 (1994) 961–967.
[17] P. Pasta, G. Mazzola, G. Carrel and G. Rica, Biotechnol. Lett., 2 (1989) 643–648.
[18] M.A. Jackson and J.W. King, J. Am. Oil Chem. Soc., 73 (1996) 353–356.
[19] B.E. Berg, E.M. Hansen, S. Gjorven and T. Greibrokk, J. High Resolut. Chromatogr., 16 (1993) 358–363.
[20] H.M. Ghazali, S. Hamidah and Y.B. Che Man, J. Am. Oil Chem. Soc., 72 (1995) 633–639.
[21] SAS Institute, Inc. SAS/STAT User's Guide, Version 6, 6th ed., Vol. 1, Cary, NC, 1989.
[22] J.W. King, Proc. 3rd Intl. Symp. on Supercritical Fluids. Vol. 3. Strasbourg, France, 1994, pp. 459–464.
[23] J.W. King, F.J. Eller, J.M. Snyder, J.H. Johnson, F.K. McKeith and C.R. Stites, J. Agric. Food Chem., submitted for publication.