1 Ag84Ah

COTTON GINNERS HANDBOOK

AGRICULTURE HANDBOOK NO. 503
Agricultural Research Service
United States Department of Agriculture

COTTON GINNERS HANDBOOK

Agriculture Handbook No. 503

Agricultural Research Service
UNITED STATES DEPARTMENT OF AGRICULTURE

Washington, D.C. Issued July 1977

For sale by the Superintendent of Documents, U.S. Government Printing Office
Washington, D.C. 20402 - Price $2.50
25% discount allowed on orders of 100 or more to one address

Stock No. 001-000-03678-5

CONTRIBUTORS

D. M. Alberson, former agricultural engineer, Agricultural Research Service.
W. Stanley Anthony, agricultural engineer, U.S. Cotton Ginning Research Laboratory, Agricultural Research Service, P.O. Box 256, Stoneville, Miss. 38776.
R. V. Baker, agricultural engineer, South Plains Cotton Ginning Research Laboratory, Agricultural Research Service, Route 3, Box 215, Lubbock, Tex. 79401.
R. F. Colwick, agricultural engineer, Cotton Production Research Unit, Agricultural Research Service, P.O. Box 5465, Mississippi State, Miss. 39762.
G. N. Franks, former agricultural engineer, Agricultural Research Service.
W. E. Garner, agricultural engineer, U.S. Cotton Ginning Research Laboratory, Agricultural Research Service, P.O. Box 256, Stoneville, Miss. 38776.
Anselm C. Griffin, Jr., physicist, U.S. Cotton Ginning Research Laboratory, Agricultural Research Service, P.O. Box 256, Stoneville, Miss. 38776.
I. W. Kirk, agricultural engineer, Southwestern Cotton Ginning Research Laboratory, Agricultural Research Service, P.O. Box 578, Mesilla Park, N. Mex. 88047.
J. W. Laird, agricultural engineer, South Plains Cotton Ginning Research Laboratory, Agricultural Research Service, Route 3, Box 215, Lubbock, Tex. 79401.
Oliver L. McCaskill, agricultural engineer, U.S. Cotton Ginning Research Laboratory, Agricultural Research Service, P.O. Box 256, Stoneville, Miss. 38776.
Gino J. Mangialardi, Jr., agricultural engineer, U.S. Cotton Ginning Research Laboratory, Agricultural Research Service, P.O. Box 256, Stoneville, Miss. 38776.
Vernon P. Moore, former cotton technologist, Agricultural Research Service.
J. H. Tony Price, executive vice president, Texas Cotton Ginners' Association, P.O. Box 44072, Dallas, Tex. 75234.
S. T. Rayburn, Jr., agricultural engineer, U.S. Cotton Ginning Research Laboratory, Agricultural Research Service, P.O. Box 256, Stoneville, Miss. 38776.
C. S. Shaw, former cotton technologist, Agricultural Research Service.
L. L. Smith, former agricultural engineer, Agricultural Research Service.
V. L. Stedronsky, former agricultural engineer (deceased), Agricultural Research Service.
W. E. Taylor, agricultural engineer, Agricultural Engineering Department, Oklahoma State University, Stillwater, Okla. 74074.
J. E. Vaughn, manager, Fire Prevention and Engineering Bureau of Texas, 1320 Mercantile Securities Building, Dallas, Tex. 75201.
R. A. Wesley, agricultural engineer, U.S. Cotton Ginning Research Laboratory, Agricultural Research Service, P.O. Box 256, Stoneville, Miss. 38776.
T. E. Wright, agricultural engineer, Southwestern Cotton Ginning Research Laboratory, Agricultural Research Service, P.O. Box 578, Mesilla Park, N. Mex. 88047.

Grateful acknowledgment is made for illustrations as follows: Bush-Hog/Continental Gin, Prattville, Ala., figs. 3–11, 3–12, 3–13, 3–14, 3–16, 3–20, 3–23, 3–28, 3–30, 3–41, 3–42, 3–44, 3–46, 3–49, 4–1, and 4–5; Cen-Tennial Cotton Gin Co., Columbus, Ga., figs. 3–5 and 3–6; Hardwicke-Etter Co., Sherman, Tex., figs. 3–18, 3–25, 3–27, 3–31, 3–45, and 4–3; International Harvester Co., Chicago, Ill., fig. 5–1; Kimbell-Bishard, Lubbock, Tex., fig. 4–6; Lummus Industries, Inc., Columbus, Ga., figs. 3–15, 3–17, 3–19, 3–22, 3–24, 3–26, 3–29, 3–32, 3–34, 3–40, 3–43, 3–50, and 4–4; Murray-Piratininga Machinery Corp. (Murray-Carver), Dallas, Tex., figs. 3–9, 3–10, 3–33, 3–35, and 4–2.

This publication supersedes Agriculture Handbook No. 260, "Handbook for Cotton Ginners," February 1964.

Trade names are used in this publication solely for the purpose of providing specific information. Mention of a trade name does not constitute a guarantee or warranty of the product by the U.S. Department of Agriculture or an endorsement by the Department over other products not mentioned.

CONTENTS

	Page
Contributors	ii
SECTION 1.—DEVELOPMENT OF THE SAW GIN, by Vernon P. Moore	1
SECTION 2.—GROWING, HARVESTING, AND STORAGE	5
Growing and Harvesting for Quality Ginning, by R. F. Colwick	5
Seed-Cotton Storage, by Anselm C. Griffin, Jr.	6
SECTION 3.—THE GINNING PROCESS	11
Green-Boll Traps, by J. W. Laird and W. E. Taylor	11
Cotton Moisture Control, by Anselm C. Griffin, Jr.	13
Cleaning and Extracting, by W. E. Garner and R. V. Baker	18
Gin Stands, by T. E. Wright and Vernon P. Moore	29
Lint Cleaning, by Gino J. Mangialardi, Jr.	35
Packaging of Lint Cotton, by Oliver L. McCaskill and W. Stanley Anthony	43
SECTION 4.—MATERIALS HANDLING	53
Separators and Droppers, by T. E. Wright	53
Fans and Piping, by Oliver L. McCaskill, R. V. Baker, and V. L. Stedronsky	57
Mechanical Conveyors, by D. M. Alberson	67
Cottonseed Handling, by S. T. Rayburn, Jr., G. N. Franks, and C. S. Shaw	69
Cottonseed Aeration and Storage, by L. L. Smith and S. T. Rayburn, Jr.	72
Collection and Disposal of Gin Waste, by Oliver L. McCaskill, R. V. Baker, and R. A. Wesley	80
Pink Bollworm Control in Gin Operations, by I. W. Kirk	92
SECTION 5.—POWER: MOTORS AND ENGINES, by W. E. Garner	97
SECTION 6.—GINNING RECOMMENDATIONS	101
Gins To Handle Specific Types of Cotton, by W. E. Garner and R. V. Baker	101
Effects of Gin Machinery on Cotton Quality, by Anselm C. Griffin, Jr.	102
SECTION 7.—MISCELLANEOUS CONSIDERATIONS	105
Fuel Value of Gin Wastes, by Anselm C. Griffin, Jr.	105
Fire Prevention Considerations, by J. E. Vaughn	106
Gin Safety, by J. H. Tony Price	108

SECTION 1.—DEVELOPMENT OF THE SAW GIN

By VERNON P. MOORE

The invention of the cotton gin triggered the equivalent of an industrial revolution in the South and made possible the development of a major export commodity, which was badly needed by a growing nation. Mass production of the crop coupled with ever-increasing labor costs made it necessary to develop mechanical handling methods, means for removing moisture and foreign matter from fiber, and faster processing to cope with changing harvesting methods and volume of cotton produced.

To trace in detail the development of the saw gin would require much more than the allotted space. Suffice it to say that the economic development of the cotton States, a large export market, and the basis of mass production came about in no small measure because of the efforts of a school teacher from Massachusetts. Eli Whitney's (1765–1825) invention provided the means of filling the needs of a young and struggling America for fiber and firearms. His development of mass-production methods for the manufacture of firearms from standard parts helped build and defend this country. His development of the cotton gin opened up new industry and revolutionized agriculture in the South. The soldier on guard at a lonely outpost and the pioneer that followed him owed the shirts on their backs and the rifles in their hands to this man who taught school on Mrs. Nathanael Greene's plantation at Mulberry Grove, about 12 miles from Savannah, Ga.

The climate of the South was favorable for growing cotton, but production had been limited to the amount that could be removed from the seeds by hand. The invention of the gin broke that bottleneck: the cotton gin Whitney patented in 1794 (fig. 1–1) made it possible to separate lint from seed about 100 times as fast as it could be done by hand. His gin removed the fibers from the seed by means of spikes on a cylinder. The spikes pulled lint through slots that were too narrow for the seeds to pass. A revolving brush removed the lint from the spikes. Many refinements have been made, but the basic principle remains unchanged (fig. 1–2).

The first major improvement was made by Hodgen Holmes, a mechanic working with Whitney. He used saws rather than spikes to remove the fibers from the seed and opened the bottom of the roll box to make gin operation continuous rather than the batch process it was with Whitney's device. His patent was issued in 1796. Changing ginning from an intermittent to a continuous operation made it more efficient and also increased capacity. Using circular saws and flat ribs instead of the spiked cylinder made it possible for farm mechanics and black-

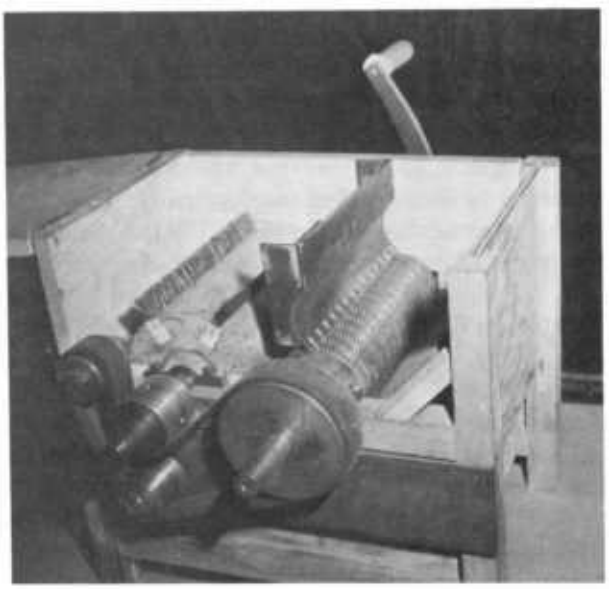

PN-5230

FIGURE 1–1.—Model, built in the shops of the U.S. Cotton Ginning Research Laboratory, Stoneville, Miss., of Eli Whitney's gin.

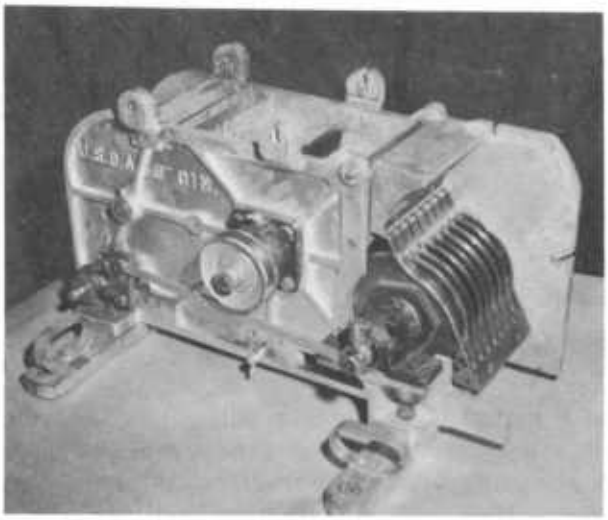

PN-5231
FIGURE 1-2.—Model gin with modern saws and ribs.

smiths to produce a gin for use on a plantation. One of the earliest gins was on Bryan's Creek near Oxford, Ga. It was powered by a water wheel.

As production increased, the gin became a symbol of the prosperous plantation owner. Expanding acreage brought with it a new problem: workers could hardly pick the cotton from the stalk as carefully as before, and, in their haste, they picked more trash with the cotton. The trash made the fiber less desirable to mills because it did not spin as well and there was more waste. For a while, the trash was picked from the cotton by hand, but for the laborer and his family sitting by the fireside at night, this was a weary task after they had worked in the fields all day.

It is quite probable that there were many attempts to clean cotton mechanically. The first evidence available to the U.S. Cotton Ginning Research Laboratory is a wooden cleaner constructed by a gin hand in 1840 at the Blakely Plantation Gin a few miles north of Vicksburg, Miss. (fig. 1-3). It was driven by a steam engine, which is on display at the Blakely Plantation.

In 1884, systems to handle bulk seed cotton began to come on the market, making it possible to feed several gin stands simultaneously. The first system conveyed seed cotton by pneumatic suction from wagons to a screen box that acted as a separator to feed a distributor. The development of feeders began in 1794; however, hand feeding was prevalent until a successful

PN-5232
FIGURE 1-3.—Wooden seed-cotton cleaner built by a slave for the Blakely Plantation Gin north of Vicksburg, Miss.

mechanical feeder was developed by Alex Jones in 1834. The conveying system coupled with the feeder took much of the hand labor from ginning, and systems powered primarily by mules or water wheels rapidly developed.

Packaging the lint was a major problem at early gins. The usual practice was to package it in sacks hung from frames built around holes in the floor. The cotton was stuffed into the sack through the hole and packed down by workers' feet. Apparently the first cotton screw press was tried about 1799.

Refinements in the gin stand and in cleaning, conveying, and packaging equipment in the 1800's and early 1900's met the needs of plantation owners very well. Cotton could be harvested in clear weather and ginned in rainy weather. As the cost of gins continued to increase, however, because of the additional cleaning equipment needed to process the progressively trashier harvested cotton, commercial installations began to replace plantation gins. The more efficient machinery became in

removing trash and moisture, the rougher the harvesting methods became, until a point was reached where the lower grades were costing producers millions of dollars each year. The damp, trashy cotton could neither be cleaned nor ginned successfully. It roped, twisted, and tangled in the machinery. It would not spin well or make high-grade yarn, resulting in fiber price discounts of as much as 20 percent.

In 1926, farmers of the Mississippi Valley, through Congressmen J. P. Buchanan of Texas and W. M. Whittington of Mississippi, asked the Department of Agriculture to develop a method for drying cotton to facilitate cleaning and reduce the losses attributable to rough preparation. Charles A. Bennett, who was stationed at Tallulah, La., developed and patented a drier that was put into operation in gins in the fall of 1929. The U.S. Cotton Ginning Research Laboratory, having facilities for fiber analysis also, was built at Stoneville, Miss., in 1931. Engineering research was under Bennett's direction; fiber analysis and quality evaluation were directed by Francis L. Gerdes. These two built a research program that continues today. Facilities for ginning investigations were later established at Mesilla Park, N. Mex.; Clemson, S.C.; and Lubbock, Tex.

Many public service patents, most covering basic items of equipment, have been granted, and more have been applied for covering developments by these laboratories. All manufacturers have access to the patents, some of which represent major advances. The seed-cotton drier, the cotton-lint cleaner, and the stick and green-leaf machine rival the invention of the gin itself in their importance to the cotton world, playing a major role in making the use of mechanical harvesting economically feasible. Furthermore, the drier made possible the more efficient use of gin machinery. Cottons that previously could not be ginned at all can now be processed satisfactorily, since dry cotton releases trash more readily and can be processed through more cleaning equipment without damage to fibers, if they are not overdried.

The mechanical harvesting methods that came into extensive use following World War II made it possible to harvest cotton rapidly, and as a result, the ginning season gradually shrank from 6 months to 6 or 8 weeks. The gin became the bottleneck, and the pressure was on to develop higher capacity machines. Developments at Stoneville resulted in a gin stand that would remove the fiber from the seed about four times as fast as gins then in commercial production. Manufacturers quickly adopted the Stoneville design or developed their own versions, as well as increasing the capacity of other components in the plant. The accelerated ginning rate made necessary major changes in the handling system. Even by speeding up press-ram travel and other innovations, it was virtually impossible for a press crew to tie out bales as fast as they could be ginned. The industry took the lead in solving this problem, through the Packaging Committee, formed in 1968, of the National Cotton Council. The efforts of this committee, working with various segments of the industry, the ginning laboratories, and the gin manufacturers, have produced numerous improvements. They include net-weight trading, which cleared the way for automatic strapping; plastic shrink-wrap bale covering; and other innovations that have substantially aided in gearing the gin to the harvesting rate.

These developments, however, have not fully solved the ginning problem for mechanically harvested cotton. Seed cotton must be dried, cleaned, and ginned at a rate as high as 18 tons an hour. The lint must be packaged in 500-pound bales at 6 tons or so an hour for the average high-capacity plant. The handling of this volume of material without fiber damage requires automatic drying systems that avoid overdrying the fiber, new types of seed-cotton cleaners for efficient trash removal, more efficient lint cleaners, better trash disposal systems, and automatic controls for the various processes to reduce labor costs. The ginner must process cotton rapidly for his customer, the farmer, and at the same time preserve spinning quality for the mill. Cotton mills, like farmers, are demanding more from cotton than ever before in an effort to reduce costs. The gin today cannot perform miracles, although it may seem to do so when it is compared to those built by Eli Whitney. The saw gin cannot improve quality; it can only preserve it. Ginning research is aimed at preserving the quality of the lint to meet the exacting requirements of the farmers' customer, the textile industry—and that is a main emphasis of this publication.

SECTION 2.—GROWING, HARVESTING, AND STORAGE

Growing and Harvesting for Quality Ginning

By R. F. Colwick

Cultural practices that may influence cotton-harvesting operations vary widely across the Cotton Belt, largely because of differences in soil and weather conditions. Local agricultural experiment stations should be consulted for recommendations on such aspects of production as variety selection, fertilization rates, irrigation practices, weed control methods, and insect control.

Selecting the field and preparing the land are important steps in preparing for harvest. The land should be well drained and the fields laid out for effective use of machines. Residue from previous crops should be shredded sufficiently in the fall to discourage insect hibernation and to promote decay during the winter. Turn rows should be smoothed out at least 25 feet wide to allow the harvester to enter the rows in proper alinement and at normal operating speed.

Uniform stands of 30,000 to 50,000 plants per acre encourage the growth of the plant type best suited for mechanical harvesting. Because grass is difficult to remove in the gin, the fields should be kept clean. The shape or profile of the rows has a bearing on the amount of trash in machine-harvested cotton. The last cultivation should leave the row elevated 2 or 3 inches, with the slope away from the base of the plants on each side. Large, late-fruiting plants should be avoided, since they are subject to lodging, boll rot, and difficulty in defoliation.

Removing the leaves from the cotton plant with chemicals helps minimize green-leaf trash in mechanically harvested cotton and promotes faster drying of dew on the lint. Defoliants make plants shed their leaves, and desiccants kill plant tissue. In most areas where the picker harvester is used, defoliants should be applied when at least 60 percent of the bolls are open. All bolls should be mature and about 90 percent should be open before desiccants are applied.

Moisture in machine-harvested cotton can be kept at a minimum by proper timing with respect to weather. The moisture in seed cotton varies directly with the relative humidity of the air around the plant. As a general rule, cotton should not be harvested for storage until it has dried to a moisture content of 10 percent or less on the plant. In some areas, this does not occur until 9 or 10 a.m. on a clear day (Parker and Wooten 1964). If cotton is picked before it has dried to a moisture level safe for storage, it should be ginned immediately. This is especially important if seed is to be saved for planting. If the seed moisture is above 12 percent, seed deterioration is likely to occur in storage.

The amount of trash or leaf harvested by the machine has a direct bearing on the total moisture content. Trash, whether green or dry, usually has a higher moisture content than the seed cotton itself. As soon as the trash and seed cotton are mixed together, they approach equilibrium in moisture content, and the harvested material may rapidly become too damp to store or gin properly.

Proper care of the harvesting machine is important in controlling trash and moisture. Before the season begins, worn parts should be replaced and all adjustments to factory specifications should be made by trained personnel.

With the spindle picker, cleanliness is most important. The manufacturer's lubrication guides should be followed, and excess oil and grease should be cleaned from the machine after each lubrication of the picking head. If oil and grease accumulate in the picking head, the head should be scrubbed down with a cleaning solvent.

On stripper machines, the plant lifters and stripping rolls or fingers should be adjusted and operated to pick up a minimum of trash and foreign material from the ground and from the plants. If the stripper is equipped

with an air blast or other boll-separating device, it should be adjusted to remove as many green bolls as possible for early (before-frost) stripping of defoliated or desiccated cotton, to prevent excessive moisture and heating.

The skill and training of the operator play an important part in harvesting clean, dry cotton. Each time a spindle picker is stopped to dump the basket, the operator or a helper should clean out the picker-head doors and drum area by hand. He should also keep the picker basket free of lint streamers. Lint streamers should never be thrown or allowed to drop into a load of seed cotton.

Most of the spindle twists, or bow-ties, that plague ginners are caused by improper adjustment of the spindle-moistening pads and doffers. These adjustments should be checked visually every time the machine stops to dump. Improper adjustment is also evidenced by poor picking efficiency, by dirty, wrapped spindles, or both. Grass and green leaves wrapped tightly in the seed cotton contribute to formation of spindle twist.

The clearance and tension of the pressure plates in the picker head should be set to suit the size and condition of the cotton being picked. If the plants are small and most bolls are open, the pressure plates can be set one-fourth inch from the tips of the spindles with a yield pressure of 40 pounds to increase picking efficiency. If the plants are large and green and if there are many green unopened bolls, the clearance can be increased to as much as three-fourths inch and the yield pressure reduced to 20 pounds. This adjustment will minimize the loss of green bolls but will reduce the machine efficiency in the first picking.

The amount of moisture added to the seed cotton by the picker can be kept at a minimum of only 1 to 2 percent if care is taken in adjusting the spindle-moistening pads and the flow of water to them. Only enough water should be used to keep the spindles clean. The flow should be adjusted throughout the day, since less will be required early in the day and late in the afternoon, when the seed-cotton moisture is higher. Wetting agents in the water may help keep spindles clean with slightly lower flow rates. Textile oils are used in some areas instead of water for spindle moistening. Tests have shown that oils keep the spindles and picker head clean but lower the picking efficiency of the machine. Also, the small amount of oil left in the lint after ginning is not desirable at spinning mills (Colwick and Shaw 1962).

In some areas considerable cotton is dropped to the ground by mechanical harvesters. Gleaning machines are available to pick it up. The foreign matter picked up with the seed cotton by these machines often requires special handling in the gin and creates ginning problems. The answer to this problem would be better control of production and harvesting practices and better harvesters to improve harvesting efficiency. By these means, the gleaning operation would be made unnecessary. Until these improvements are achieved, however, gleaning will be a profitable practice in some areas of the Cotton Belt.

REFERENCES

Colwick, R. F., and Shaw, C. S. 1962. Spindle moistening agents for mechanical cotton pickers: an evaluation. U.S. Dep. Agric., Agric. Res. Serv. [Rep.] ARS 42–68, 18 pp.

Parker, R. E., and Wooten, O. B. 1964. Sources of moisture in mechanically harvested cotton and its effects on cotton quality. U.S. Dep. Agric. Tech. Bull. 1313, 25 pp.

Seed-Cotton Storage

By Anselm C. Griffin, Jr.

Storing seed cotton is the inescapable result of harvesting cotton faster than it can be ginned. The disparity between harvesting and ginning rates is sometimes unintentional, but more often it is the result of planned, coordinated efforts to harvest and gin the crop in the most profitable manner.

Once the crop has opened, delays in harvesting it usually mean risking quality and quantity losses from the weather, especially from rainstorms. Thus, there is a financial incentive to harvest the crop as rapidly as possible, even if it cannot be ginned immediately.

The most important single factor in determining whether seed cotton can be stored without quality loss to either fibers or seeds appears to be its moisture content. Agricultural Re-

search Service's work (1972) on small lots of cotton indicates that seed-cotton storage at densities up to 12 pounds per cubic foot is possible, without loss in seed quality (based on germination, free fatty acid content, and aflatoxin analyses) at the following moisture levels:

Moisture content of seed (percent wet basis)	*Days storage*
8–10	30
10–12	20
12–14	10
14–15	less than 3

Griffin and McCaskill (1964) reported that seed cotton stored in trailers with cottonseed at 14 percent moisture suffered loss in lint grade and bale value because of spotting, and Montgomery and Wooten (1958) found that cotton picked early in the morning with 20 percent seed-cotton moisture gave lower lint grades than cotton picked in the afternoon at 13 percent moisture, when both were delayed 8 to 72 hours before ginning.

There is no convenient, rapid method for accurately determining the moisture content of seed cotton. The portable moisture meters sometimes found at gins were originally designed to measure the moisture content of lint only and are not recommended for determining the moisture content of seed cotton in the field. However, there is a high correlation between cotton moisture content and the ambient relative humidity, which may be readily determined by using a sling psychrometer or hair hygrometer (which indicates relative humidity directly); the moisture content of the seed cotton on the stalk may then be estimated by referring to figure 2–1. Spindle picking may add 1 to 2 percentage points to the moisture content of seed cotton. It is recommended that cotton for storage be picked only when the ambient relative humidity is lower than 50 percent. If harvesting is begun before the cotton has adequately dried, the cotton should be taken to ginneries for immediate ginning.

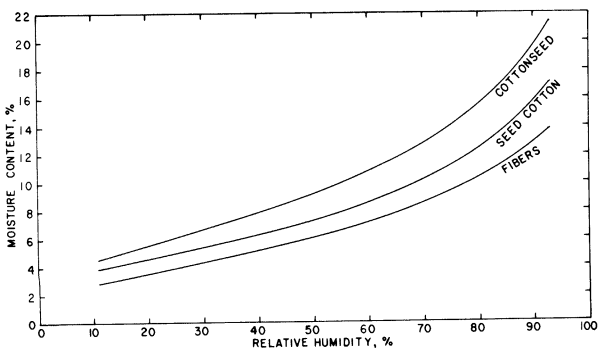

FIGURE 2–1.—Typical moisture content (wet basis) of cotton fibers, seed cotton, and cottonseed in moisture equilibrium with air at 70° F.

The quantity and moisture content of foreign matter in seed cotton may sometimes determine whether the cotton may be safely stored. Clean, dry cotton may be stored indefinitely without deterioration, but cotton harvested with a high percentage of high-moisture plant parts, such as by early stripping, cannot be considered a safe storage risk. The same is true of the cotton surrounding the wad of green plant parts that sometimes collects in the basket of spindle pickers.

Cotton that is too damp for safe storage may, in some instances, be dried in gin driers. Enough moisture must be removed to offset the higher temperature produced in the seed cotton by the drying. Agricultural Research Service studies (1972) showed that two 24-shelf driers operating at 300° F at the air-cotton mixpoint should dry dewy cotton enough to permit at least 7 days' safe storage. Only one stage of drying can result in merely putting wet cotton into storage at temperatures favorable for bacterial damage.

It is usually impractical to attempt to dry or to cool seed cotton in storage. For this reason, storage facilities may be regarded as "dead" storage, and handling machinery is required only for moving cotton into and out of the facility.

Some of the commonly used storage systems are conventional cotton transport trailers, houses or sheds, and free-standing ricks or modules. Other systems store harvested cotton in wheelless, trailerlike bins, in piles on turnrows, and as seed-cotton bales; these methods are not now widely practiced, and some are more suitable in certain parts of the Cotton Belt than in others.

HOUSE OR SHED STORAGE

One of the more popular types of storage for bulk seed cotton consists of one or more large sheds; when not required for cotton storage, they can be used for storing equipment or other items. This type of facility may be used

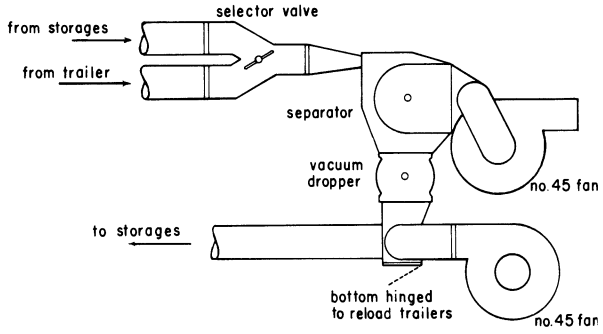

FIGURE 2–2.—Recommended minimum machinery for moving seed cotton into and out of bulk storages. Cleaning, extracting, and drying equipment may be inserted if required.

with a centralized unloading and loading station, with connecting pipe for moving cotton into and out of the storages (fig. 2–2). Separate fans to unload cotton from trailers and to blow the cotton to the storage bins are recommended. Such an arrangement results in fewer chokages and faster unloading than a system employing only one fan. Machinery sizes and fan speeds will depend on the intended handling rate, the condition of the cotton, and the distance to the storage. Most machine-picked cotton can be handled at a rate of 8 to 10 bales per hour with a 72-inch separator, 14-inch pipe, and fan speeds of 1,900 revolutions per minute. By using overhead delivery pipe along the centerline and installing 90° swivel elbows at 40-foot intervals, a 40-foot-wide house may be loaded with a minimum of effort.

One means of unloading such a storage is a suction pipe, with capped openings at appropriate intervals, laid on the floor before the building is filled with cotton. To unload the storage, the most accessible cap is removed and cotton is hand-fed into the pipe. As the cleared area increases, 10- or 12-foot lengths of pipe may be fitted to the opening to facilitate handling. As unloading progresses, additional openings may be used until the building has been emptied.

After all cotton has been removed, the floor pipe may be removed so that the entire floor area is cleared for other uses. In this connection, one or more of the sidewalls may be hinged or removable to provide easy access into the building.

A frequent modification of this plan is to locate the storage facility near enough to the gin that the trailer-unloading fan(s) in the gin may be used to draw cotton from the storage house.

In some areas portable cotton-handling systems are used in a cotton-through-the-fan arrangement so that the same fan may be used for sucking and blowing the cotton. This arrangement is relatively slow, but it works reasonably well when it is operated within its limitations and when seed damage is not important.

TURNROW STORAGE

Perhaps the most attractive way to provide temporary seed-cotton storage so that harvesters are not halted for lack of basket dump and storage space is to store cotton on turnrows. In one method, cotton harvesters dump into a slip-form stacker or rick former, in which the cotton may either be compacted by workers walking on it or by a mechanical compactor. This results in a continuous rick of cotton of any desired length. Ricks should be located on well-drained ground areas, from which the cotton can be picked up by tractor-mounted front-end loaders or other similar devices, and transferred into conventional trailers for hauling to the ginnery.

In another method, a module former is used to shape a smaller stack, which is handled as a separate load thereafter. The stored cotton rests on a wooden or metal pallet that protects it from ground moisture and provides a means of loading the cotton undisturbed onto a carrier for transport to the ginnery. Cotton stored in this form is usually protected from rain by tarpaulins. The quantity of cotton that can be stored in each stack or module will depend to some extent on cotton moisture content, but to a greater extent on the compacting force. Typical weight-space-density relationships are 6 to 7 pounds per cubic foot for cotton foot-packed by workers and 9 to 12 pounds per cubic foot for machine-packed cotton. An advantage, in addition to the larger amount of cotton stored by packing, is that the stack becomes self-supporting and may be transported without excessive road loss.

In locations where the risk of rain or groundwater damage is slight, harvesters may dump their loads in piles directly on the ground for later retrieval by portable fans, front-end loaders, drag lines, or other means.

REFERENCES

Griffin, A. C., and McCaskill, O. L. 1964. Storage of seed cotton in trailers. U.S. Dep. Agric. Prod. Res. Rep. No. 81, 18 pp.

Montgomery, R. A., and Wooten, O. B. 1958. Lint quality and moisture relationships in cotton through harvesting and ginning. U.S. Dep. Agric., Agric. Res. Serv. [Rep.] ARS 42–14, 19 pp.

U.S. Agricultural Research Service. 1972. Factors affecting cottonseed damage in harvesting and handling. U.S. Dep. Agric. Prod. Res. Rep. No. 135, 77 pp.

———. 1973. U.S. Cotton Ginning Research Laboratory (Stoneville, Miss.) Annual Report FY 1973, pp. 239–250.

SECTION 3.—THE GINNING PROCESS

Green-Boll Traps

By J. W. LAIRD and W. E. TAYLOR

Periodically, early-season machine-stripped cotton containing many green immature bolls has caused ginning problems such as clogging of the sawteeth, failure of the seed roll to turn, accumulation of sticky material on the inner surface of the roll boxes and on the saws and moting surfaces of the gin stands, and occasional clogging of other machines (Wakelyn et al. 1972). Two causative factors seem to be involved.

When green, unopened cotton bolls enter the gin along with mature bolls, many of the green bolls are broken by the machinery through which they pass, and some of the green-boll segments eventually enter the gin stand along with mature locks. When the gin sawteeth engage the wet lint and soft seed of a green boll, some of the immature material becomes so tightly wedged in the sawteeth that it resists doffing. As the flow of immature locks into the seed roll continues, additional sawteeth become clogged, and eventually the seed roll can no longer rotate. As a result, the gin must be shut down, and the wet material wedged in the sawteeth removed by hand.

Also, moisture is transferred from green bolls (and possibly other wet plant materials) into dry cotton under certain harvesting and storage conditions. This wet cotton causes ginning problems similar to those resulting from green bolls. Cotton and cottonseed, especially when immature, contain small amounts of substances that become sticky when wet and are thought to be at least partly responsible for the gumming of gin machinery. These substances appear mostly in unopened or early-season cotton, particularly in dry climates. Apparently, they change with maturation of the cotton or are degraded by the effects of weathering and are therefore not troublesome late in the harvest season.

The use of green-boll removers on stripper harvesters has alleviated but not eliminated the green-boll problem. Turnrow storage has also helped the green-boll problem because the storage period allows for longer drying, but at times it has aggravated the moisture transfer problem. Turnrow storage has also made rock and clod removal by green-boll traps more important.

Various devices are used in cotton gins to remove green bolls from the harvested material and to prevent their reaching the gin stand. Some of these green-boll traps are constructed on the principle that green, unopened bolls have a considerably greater density than dry, mature bolls. In most pipes conveying seed cotton in the gin, the air velocity is such that both open and green bolls will be transported. Since the density of the two types of bolls is different, their separation can be effected in a chamber where the air velocity is reduced to such a point that green bolls settle out of the airstream but open bolls do not.

Another means of separation is by centrifugal force. Since green bolls are heavier than mature bolls and since the centrifugal force that acts on an object is proportional to its weight, the two types of bolls may be separated by subjecting them to equal angular acceleration. The mixture of open and green bolls is carried through a duct that abruptly changes direction. Being lighter in weight than green bolls, the open bolls are subjected to less centrifugal force and more nearly follow the path of the air as the duct changes direction. The green bolls tend to continue in the original direction of travel and are expelled from the airstream into a suitable collection chamber.

Some green-boll traps employ a combination of stilling chamber and centrifugal force (fig. 3–1). Because of the variations in design of this type of green-boll trap, detailed instructions for its operation cannot be given here. For successful operation, the manufacturer's recommendations on air velocity and baffle adjustment should be closely followed. The trap

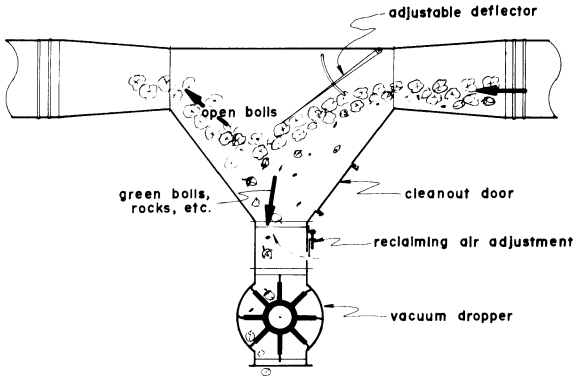

FIGURE 3–1.—Hopper type of green-boll trap.

should be inspected frequently to see that the baffle and reclaiming air are properly adjusted for the type of cotton being processed.

The hopper type of green-boll trap shown in figure 3–1 has been rather widely adopted by the industry. Most commercially manufactured units employ the design principles shown here except for variations in control and adjustment and in reclaiming. Some use a counterweighted trapdoor and a short accumulating pipe in place of the vacuum dropper. The trapdoor is held closed by suction while cotton is being unloaded, then opens and dumps by the weight of the trapped green bolls when the suction valve cycles to "off." The reclaiming airstream is an undesirable feature because it reduces the wagon unloading capacity and increases the horsepower required for unloading, but it has been found necessary to prevent loss of open cotton along with the green bolls. It is desirable to keep the deflector adjusted as high as possible and the reclaiming air at the minimum consistent with acceptable green-boll removal. The power requirement for the reclaiming airstream under typical conditions may be as much as 15 horsepower for a single unit.

Research to develop better methods for green-boll removal has been underway at both public and private agencies. One outgrowth of this work has been the development of effective green-boll removers mounted directly on the stripper harvester, reducing the problem before the cotton gets to the gin (Kirk and Hudspeth 1964). The advent of the overhead basket stripper harvester has helped because, rather than concentrating the green bolls in one spot in the lower front of the trailer, it tends to spread them evenly, producing a lighter, more uniform load on the green-boll separator in the gin.

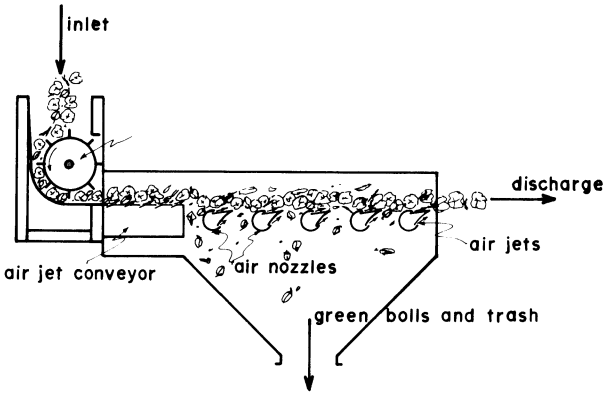

FIGURE 3–2.—Air-jet green-boll separator.

Efficiency is higher, and the ginner can adjust for lower reclaiming air and less reduction in unloading capacity. Uniform spreading of the green bolls in the trailer also helps minimize moisture transfer and spontaneous heating problems that tend to occur around accumulations of wet green material.

Turnrow storage offers both advantages and disadvantages. The long storage period helps because it may allow sufficient time for the wet green bolls to dry, but when moisture from green-boll concentrations migrates to the surrounding dry cotton, it can cause ginning problems that last for extended periods.

Research effort at the South Plains Cotton Ginning Research Laboratory is directed toward learning more about the problems associated with ginning green and wet cotton and toward development of green-boll removal devices that reduce energy requirements and are effective in removing green bolls that have been broken up before they reach the remover.

A device called the air-jet green-boll separator is being investigated (fig. 3–2). It is designed to take maximum advantage of the different aerodynamic characteristics of green bolls and open cotton. The unit does not have to be located in the conveying airstream and operates at a much lower air pressure, with corresponding reduction in energy consumed, and less interference with suction unloading capacity. In this device the cotton is passed across a series of air jets, the velocity of which is adjusted to convey the open cotton but not the green bolls. The latter fall between the jets and are removed. The cotton is exposed to separating conditions for a longer time and in

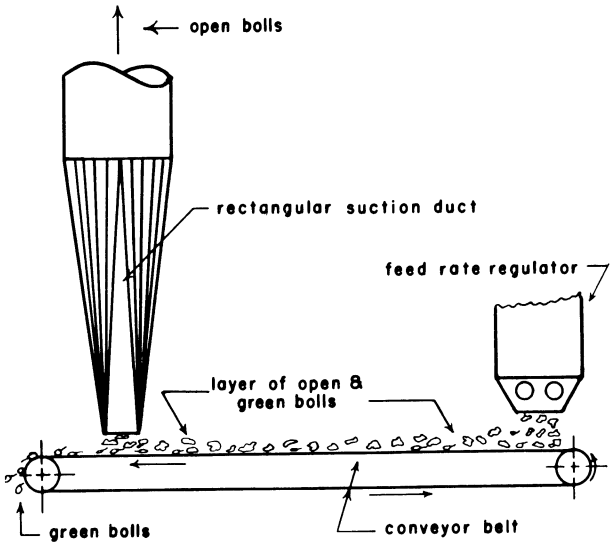

FIGURE 3–3.—Conveyor-belt suction-duct green-boll separator.

a thinner stream, allowing increased opportunity for heavy materials to separate. It can be located immediately following the unloading system regardless of the type of system used and will convey the cotton to the next location. Research is not yet complete but it appears promising. The device has shown a capacity for removing wet cotton, ice, snow, and some trash from dry cotton, but control may prove to be too critical in such applications.

Another type of trap (fig. 3–3) developed at the Oklahoma Ginning Research Laboratory, although not widely used, is being adopted in the dump, belt-feed, unloading systems installed in new, very high capacity ginning plants. In this trap, a thin layer of the harvested cotton is deposited on a moving endless belt. A suction duct near one end of the trap lifts open bolls from the layer of material, while the green bolls, tramp iron, rocks, and clods remain on the belt and are discharged over the end. This trap removes 87 to 92 percent of green bolls, with a lint loss of less than one-fourth pound per bale when used on cotton containing up to 11 percent green bolls. It also removes a considerable number of sticks and bollies.

An ounce of prevention is certainly worth a pound of cure when it comes to green-boll removal. A ginner should make every effort to get this material removed as close to the stripper harvester as possible. Where waiting for the bolls to dry on the stalk is practical, this is the best solution, but often other considerations override it. Problems start to occur at a green-boll content of approximately 10 percent. Other variables, such as moisture content of bolls and cotton, relative humidity and temperature, time, and condition of storage between harvest and gin are involved. Sometimes concentration of green material in a small volume within a load can cause problems that would not have arisen with the green material more scattered. However, scattering is not always an effective solution, because at green-boll contents slightly greater than 10 percent the entire load can be affected so that none of it can be ginned. Scattering does improve the efficiency of green-boll removers and works where it keeps the green-boll concentration in any part of the load below about 5 to 6 percent. The same general rule also applies in field storage, to prevent the development of hot spots.

REFERENCES

Kirk, I. W., and Hudspeth, E. B., Jr. 1964. Development and testing of an improved green-boll separator for cotton-stripper harvesters. Trans. ASAE 7: 414–417.

Laird, J. W., and Baker, R. V. 1973. Removal of green-bolls from seed cotton by air jets. Am. Soc. Agric. Eng. Pap. No. 73–342, 15 pp.

Wakelyn, P. J., Loewenschuss, H., Roark, B. A., and Laird, J. W. 1972. Constitution of the deposit on the inner surfaces of gin roll boxes. Text. Res. J. 42: 597–600.

Cotton Moisture Control

By ANSELM C. GRIFFIN, JR.

There are two principal reasons for controlling cotton fiber moisture content in ginneries: for smooth operation of the processing machinery and for obtaining the optimum fiber quality from the seed cotton delivered to the ginnery.

Cotton with too high a moisture content will not readily separate into single locks and will form wads that may choke, warp, or break ginning machinery. Cotton too low in moisture may also cause machinery stoppages by clinging to metal surfaces as a result of static electricity generated on the fibers.

Damp cotton does not clean as well as dry

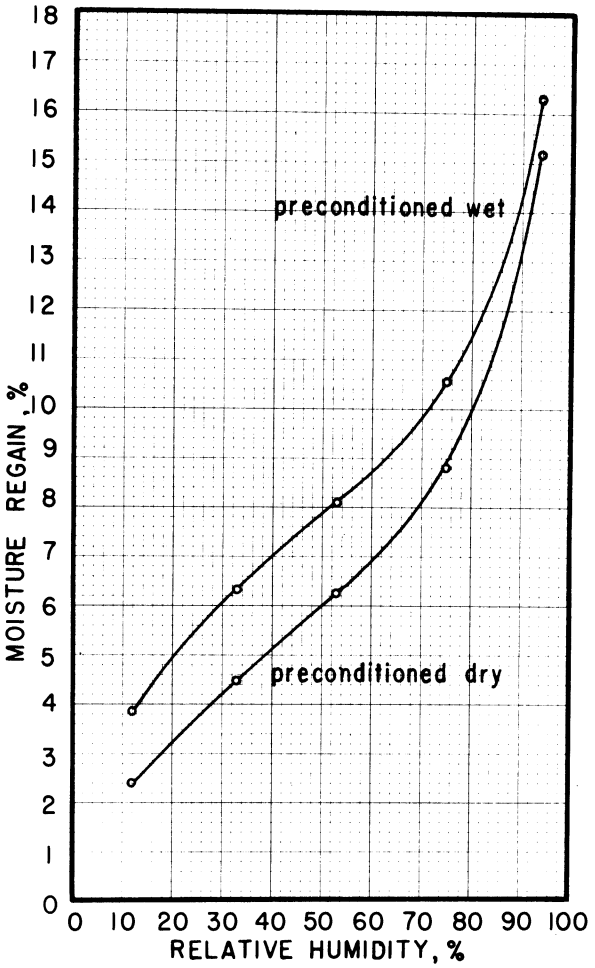

FIGURE 3–4.—Relationship of cotton fiber moisture content (dry basis) to ambient relative humidity at 70° F.

cotton. Before the widespread use of lint cleaners, some ginners sought to obtain the highest grades possible by drying the cotton to moisture levels that are now considered unsafe for fiber length preservation. Research has established that the apparent strength of cotton fibers is directly proportional to fiber moisture content and is therefore greater at higher moisture levels. Consequently, as fiber moisture content is lowered, as by drying, the apparent strength is reduced and the frequency of fiber breakage during ginning is increased.

Fiber moisture content from 6.5 to 8 percent gives smooth saw gin operation and profitable lint grades while holding the fiber breakage rate to a reasonably low level. Although cotton can be processed at moisture levels higher than 8 percent and lower than 6.5 percent, the risk of operational or quality-control problems increases as the fiber moisture content departs from that range. In roller ginning, a fiber moisture content of 5 to 6 percent is desirable.

Cotton is a hygroscopic material. Consequently, its natural moisture content varies in relation to the relative humidity of the surrounding air. A typical relationship between raw cotton fiber moisture content and ambient relative humidity is shown in figure 3–4.

Cotton harvested during periods of high humidity may arrive at ginneries with a moisture content as high as 12 percent or more, and cotton harvested during periods of low humidity may contain fiber moisture of 4 percent or less. For these reasons, ginneries seeking to gin lint at a predetermined moisture content must be prepared to add as well as remove moisture from the cotton being processed.

DRIERS IN GINNERIES

The first heated-air driers for use in cotton ginneries were developed by the U.S. Department of Agriculture in the period 1926–32. These included moving trays and drag belts, but the most successful and widely used drier has been the shelf type in which cotton is conveyed through the drier by the heated air (fig. 3–5). Other types of driers, such as counterflow, mechanical reel, screw conveyor, and combination cleaner-driers, have also been used.

The physical dimensions of tower driers vary among manufacturers; most conventional tower driers are 4 to 6 feet wide, about 6 feet long, and 17 to 20 feet high. The number of shelves varies from about 16 to 24, and the spacing between shelves varies from 8½ to 10 inches. Larger driers are available, but most gin driers in use today fall within the limits given.

The cotton-handling capacity of tower driers may range from 8 to 30 bales per hour, depending upon drier width, condition of the cotton, and quantity of air moving through the system.

Spindle-harvested cotton processes faster through tower driers than stripped or snapped cotton because it contains less waste. Rain-wet and other relatively dense cottons must be handled with care to prevent choking because of temporarily overloading the conveying system. The most critical locations in the drying system are in the pipe immediately below the bulk feed dropper and in the first few shelves at the top of the tower, where the air velocity is suddenly lowered as it moves from the con-

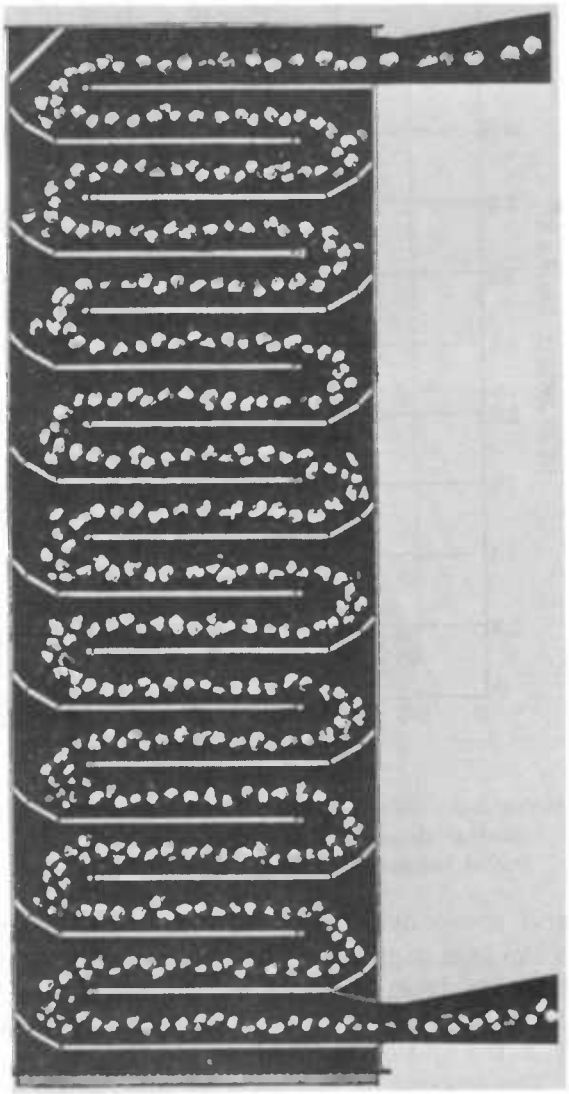

FIGURE 3–5.—Typical shelf tower drier for drying seed cotton in ginneries.

veying pipe into the drier. In commercial practice, air velocity in the cotton-conveying pipe ranges from 4,000 to 5,000 feet per minute, and in the driers, the velocity may be reduced to only one-half of the conveying velocity.

There is some slippage between cotton and air, this being greatest for damper, heavier, denser cottons. As the cotton is opened and fluffed by moisture removal and mechanical action, it is more easily airborne, and its final velocity more nearly approaches that of the conveying air. Cotton is seldom in a gin drying system for as long as 15 seconds; 7 to 10 seconds is common.

The first driers were heated by steam coils,

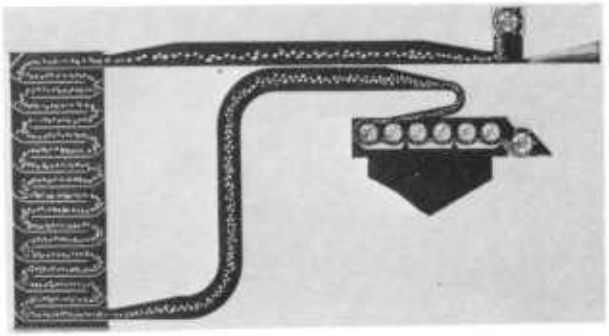

FIGURE 3–6.—Typical gin drying system. A fan and burner deliver heated air to the air-cotton pickup point, and a second fan is usually used to aid in conveying cotton through the system.

with drying air temperature initially at about 160° F. But cotton roughly harvested and harvested during periods of high humidity called for removal of more moisture, requiring the use of higher drying temperatures, more than one stage of drying, or both. Modern drying systems are capable of serious overdrying and must be regarded as quality hazards if they are not used properly. Most of the moisture removal takes place in the first 3 seconds after the cotton is exposed to the heated air, and drying-air temperatures in excess of 350° F at the air-cotton mixpoint may have serious adverse effects on fiber quality. Therefore, the use of two or more stages of drying at relatively low temperatures is preferable to a single stage at higher temperature.

The typical gin drying system consists of a heater, one or more fans, piping, shelf drier, and seed-cotton cleaner that serves the dual purpose of separating the warm moist air from the cotton and cleaning the cotton (fig. 3–6). There are wide variations in the layout of ginneries, so that air requirements and drying exposure periods may be expected to differ from gin to gin. Because of these wide variations, Agricultural Research Service's laboratories refrain from recommending specific operating temperatures (except that in no case should the temperature in *any* portion of the drying system exceed 350° F).

The location of temperature control sensors is important. Many bales have been overdried and some have been set afire through overheating, even though the sensing device indicated a safe drying-air temperature. When the temperature sensor is located well into the drying system—near the bottom of the drier, for

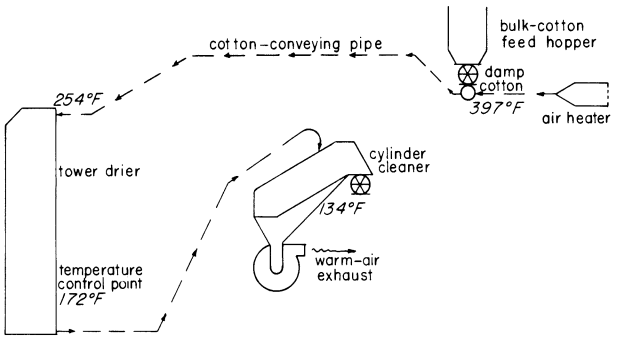

FIGURE 3–7.—Temperature gradient observed in a commercial gin drying system with the temperature control point located near the bottom of the tower drier.

example—the temperature at the air-cotton mixpoint may be considerably higher than that indicated by the sensor (fig. 3–7).

Mixpoint temperatures as high as 450° F have been observed with a control point temperature of about 180° F. It is recommended that the temperature control sensor be located in the hot-air line just ahead of the mixpoint. If this is not practicable, then a temperature high-limit switch at this location set for 350° F is recommended to prevent scorching and ignition of cotton in the drying system.

Gin drying systems originally consisted of a single processing line, with machinery sized to meet production rate requirements, but modern hourly processing rates may often require dividing the seed-cotton stream for adequate drying. The ginning machinery manufacturers' recommendations should be followed with respect to equipment size and processing rate.

The pace of modern ginning is too rapid for ginners to examine each load of cotton and adjust the drying system accordingly; all U.S. ginning machinery manufacturers offer some type of automatic drier control. These controls permit the plant to reduce the variability of moisture content of the finished bales and may offer considerable energy savings by adjusting the heater fuel to the amount actually needed to remove excess moisture from the cotton and by cutting the burners back to low flame when no cotton is in the drying system.

A study of heat use by a tower drier at the U.S. Cotton Ginning Research Laboratory, Stoneville, Miss., showed that a drying system having uninsulated pipe and an uninsulated

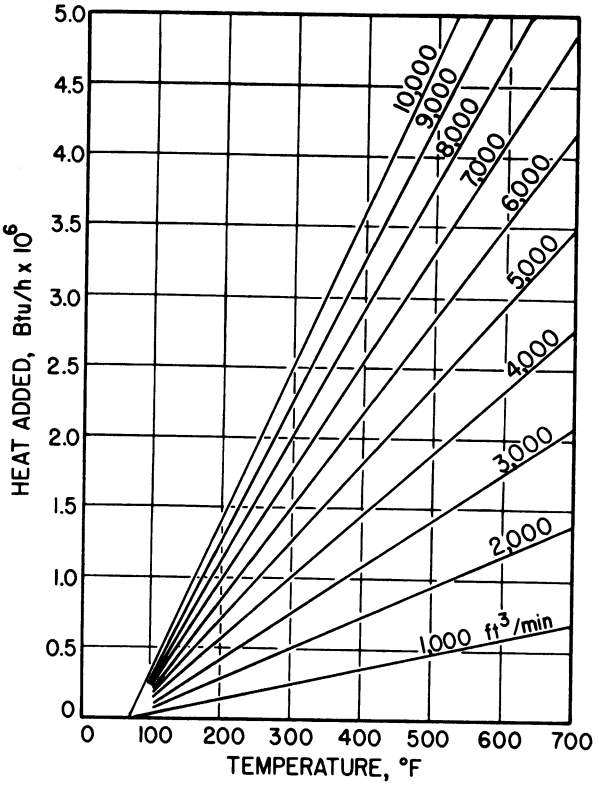

FIGURE 3–8.—Heat-to-temperature relationships for air moving through a gin drying system from an initial temperature of 70° F.

steel tower drier used only about 16 percent of the heat supplied by the air heater to remove moisture from the cotton. The remainder of the added heat was lost by radiation or passed from the system as warm air.

The amount of fuel used by gin drying systems may be estimated in several ways. The simplest method is to relate fuel purchases to bales ginned, making allowance for fuel not used by the cotton driers. When the volume of air moving through the drying system is known (see "Fans and Piping"), a thermometer in the air line near the heater will provide a basis for estimating fuel consumption. From figure 3–8, the heat added to the air may be read on the vertical axis for a known air volume at a given temperature. For example, if the drying system is pulling 5,000 cubic feet of air per minute and its temperature near the heater is 300° F then the heat being supplied is estimated at about 1.25 million Btu per hour. Assuming a combustion efficiency of 95 percent and using the heat values of table 3–1, the quantity of fuel required to yield 1.25 million

Btu is about 1,300 cubic feet of natural gas or about 14.4 gallons of commercial propane.

A sampling of 48 cotton ginneries in Arkansas and Missouri in 1960–61 showed that an average of about 430,000 Btu was required to dry a bale of cotton. In terms of quantity of fuel consumed, this was about 381 cubic feet of natural gas or about 4.4 gallons of the conventional butane-propane mixture per bale (Holder and McCaskill 1963).

MOISTURE RESTORATION

Since the fiber breakage rate during ginning is inversely proportional to the fiber moisture content at the gin stand and lint cleaners, the number of fibers that break may be minimized by conducting the fiber-seed separation and lint-cleaning processes at as high a moisture level as practicable.

Much of the American cotton crop is harvested during low-humidity periods and often arrives at the ginnery with fiber moisture from 4 to 5 percent. The average fiber length of such cotton may be improved by adding moisture *before* fiber-seed separation and lint cleaning, by reducing the number of fibers that break in the gin stand and lint cleaners. *But restoration of moisture to ginned lint will not improve fiber length.* Other benefits resulting from moisture restoration include reducing the static electricity level of the cotton and reducing the amount of power required to pack and press a bale of cotton (see "Packaging"). Methods of moisture restoration have included introducing humid air from vapor generators into extractor-feeders, feeder chutes, and lint flues; creating a fog or mist through which seed cotton must fall or be conveyed; and spraying moisture on ginned lint as it passes from the final lint condenser to the press box.

There is a practical physical limit to the quantity of moisture that may be added to seed cotton. Wetting of the cotton by uncontrolled emissions or by unexpected condensation within machinery and pipes must be prevented or chokages will result. Gin stand operation becomes irregular and may cease altogether if liquid water pervades the seed-cotton mass. Cotton with fiber moisture of 9 percent or more may not gin smoothly and will not process properly through the lint cleaners. Thus, the recommended fiber moisture level of 6.5 to 8 percent has a ginnery production aspect as well as a quality aspect.

TABLE 3–1.—*Nominal heat content for some fuels used in drying systems at ginneries*

Fuel	Heat content
Natural gas	1,000 Btu/ft^3
Commercial butane	102,600 Btu/gal
Commercial propane, HD 5	91,500 Btu/gal
Propane/butane (40/60)	97,800 Btu/gal
Fuel oil, CS No. 2	140,000 Btu/gal

A development of the Southwestern Cotton Ginning Research Laboratory at Mesilla Park, N. Mex., called the monoflow cotton conditioning system, is based on the hygroscopic nature of cotton and its tendency to approach moisture equilibrium with the surrounding air (Gillum et al. 1973). In the monoflow system all the conveying air is maintained at a specified relative humidity. This causes overwet cotton to give up moisture and overdry cotton to absorb moisture toward a preselected target moisture level of about 7 percent.

An automatic moisture control system that dries with heated air and adds moisture on demand from a single measurement at the seed cotton input hopper has been demonstrated at the U.S. Cotton Ginning Research Laboratory, Stoneville, Miss. The system has been modified to include fog nozzles in the distributor for moisture addition at high ginning rates (Griffin and Mangialardi 1967).

Provision for moisture restoration should be a part of plans for new ginneries or for remodeling older plants. Moisture restoration facilities will insure that ginneries are able to maintain the inherent cotton fiber length properties in spite of harvesting and ginning weather conditions.

REFERENCES

American Society of Heating, Refrigeration, and Air-Conditioning Engineers. 1972. Handbook of fundamentals, pp. 167–176. The Society, New York.

Bennett, C. A. 1928. Seed cotton drying apparatus. (Moving trays, vertical travel.) U.S. Patent No. 1,695,991.

———. 1929. Process and apparatus for drying seed cotton. (Moving trays, horizontal travel.) U.S. Patent No. 1,707,929.

———. 1929. Seed cotton drying apparatus. (Vertical chute drier.) U.S. Patent No. 1,707,930.

———. 1932. Apparatus for drying seed cotton. (Tower with stationary shelves.) U.S. Patent No. 1,871,773. (This patent contains an excellent discussion of the cotton-drying process and principles involved.)

———. 1932. The vertical seed cotton drier. U.S. Dep. Agric. Misc. Pub. 149, 8 pp.
———. 1937. Apparatus for drying seed cotton. (Airline cleaner-drier.) U.S. Patent No. 2,078,309.
———, and Gerdes, F. L. 1939. The vertical drier for seed cotton. U.S. Dep. Agric. Misc. Pub. 239, 31 pp.
———, and Shaw, C. S. 1938. Overhead cleaner-dryer systems. U.S. Dep. Agric. Misc. Pub. 314, 20 pp.
———, Stedronsky, V. L., and Martin, W. J. 1940. Sources of heat for cotton drying. U.S. Dep. Agric. Misc. Pub. 383, 22 pp.
Chapman, W. E., Jr. 1971. Effects of temperature and humidity of Pima and Upland seed cotton in sealed cans on ginning performance and fiber and seed quality. U.S. Dep. Agric., Agric. Res. Serv. [Rep.] ARS 42–182, 15 pp.
Cocke, J. B., and Garner, W. E. 1972. Effect on ginning and spinning efficiency and cotton quality of fiber moisture, seed-cotton cleaning, and lint cleaning. U.S. Dep. Agric. Prod. Res. Rep. 143, 14 pp.
Franks, G. N., and Shaw, C. S. 1969. Multipath drying at cotton gins for controlling moisture in cotton. U.S. Dep. Agric., Agric. Res. Serv. [Rep.] ARS 42–69, 12 pp.
Garner, W. E., and Mullikin, R. A. 1964. Effects of certain drying treatments in ginning on fiber properties and spinning performance of Southeastern cotton, crop of 1960. U.S. Dep. Agric. Prod. Res. Rep. 85, 16 pp.
Gerdes, F. L. 1950. Cotton drying practices in relation to quality and efficiency of ginning. The Cotton Ginners' Journal and Yearbook 18(1): 26–27.
———, Martin, W. J., and Bennett, C.A. 1939. Drying seed cotton. U.S. Dep. Agric. Leaf. 181, 8 pp.
———, Rusca, R. A., and Stedronsky, V. L. 1941. Drying of seed cotton at gins. 27 pp. Agricultural Marketing Service and Bureau of Agricultural Chemistry and Engineering, U.S. Department of Agriculture.
Gillum, M. N., Leonard, C. G., and Wright, T. E. 1973. Monoflow: control of moisture and reduction of air pollution by using monoflow air system. The Cotton Ginners' Journal and Yearbook 41(1): 4–10.
Grant, J. N., Harold, E., Andrews, F. R., and Griffin, A. C., Jr. 1962. Drying, cleaning effects on cotton fiber properties. The Cotton Gin and Oil Mill Press 63(15): 7, 46–47.
Griffin, A. C., Jr. 1964. Prevent fiber breakage. The Cotton Gin and Oil Mill Press 65(10): 18, 35–36.
———. 1964. Bringing fiber moisture under control. The Cotton Ginners' Journal and Yearbook 32(1): 15, 17, 20.
———, and Harrell, E. A. 1957. Effects of moisture added at the lint slide on lint quality, and bale weight in humid cotton production areas. U.S. Dep. Agric. Prod. Res. Rep. 14, 16 pp.
———, and Mangialardi, G. J., Jr. 1961. Automatic control of seed cotton drying at cotton gins, a review of research. U.S. Dep. Agric., Agric. Res. Serv. [Rep.] ARS 42–57, 14 pp.
———, and Mangialardi, G. J., Jr. 1967. Another first—a completely integrated moisture control system for gins. The Cotton Gin and Oil Mill Press 68(11): 7.
———, and Mangialardi, G. J., Jr. 1970. Some considerations in the design of an electrode system for measuring the moisture content of cotton. The Cotton Gin and Oil Mill Press 71(9): 7, 8.
Harrell, E. A. 1956. Apparatus for the restoration of moisture to the fibers of seed cotton. U.S. Patent No. 2,764,013.
Holder, S. H., and McCaskill, O. L. 1963. Costs of electric power and fuel for driers in cotton gins, Arkansas and Missouri. U.S. Dep. Agric., Econ. Res. Serv. [Rep.] ERS 138, 12 pp.
Jorgensen, Robert (ed.), 1970. Fan engineering, pp. 523–537. 7th ed. Buffalo Forge Co., Buffalo, N.Y.
Leonard, C. G., Ross, J. E., and Mullikin, R. A. 1970. Moisture conditioning of seed cotton in ginning as related to fiber quality and spinning performance. U.S. Dep. Agric. Mark. Res. Rep. 859, 16 pp.
Mangialardi, G. J., Jr., and Griffin, A. C., Jr. 1966. Lint cleaning at cotton gins: effects of fiber moisture and amount of cleaning on lint quality. U.S. Dep. Agric. Tech. Bull. 1359, 24 pp.
———, Griffin, A. C., Jr., and Moore, V. P. 1968. Cotton ginning system having automatic seed cotton conditioner. U.S. Patent No. 3,392,424.
———, and Griffin, A. C., Jr. 1968. A moving bed drier for cotton research. U.S. Dep. Agric., Agric. Res. Serv. [Rep.] ARS 42–140, 11 pp.
Perry, J. H. (ed.). 1963. Chemical engineers' handbook, section 15. 4th ed. McGraw-Hill, New York.
Speakes, C. C., and Griffin, A. C., Jr. 1956. Method of moisture restoration to cotton. U.S. Patent No. 2,747,234.

Cleaning and Extracting

By W. E. Garner and R. V. Baker

The need for seed-cotton cleaning and extracting equipment in the gin has developed gradually through the years to cope with rougher harvesting methods. The development of the seed-cotton drier has greatly expanded the use of cleaning machinery in the gin because dry cotton can be cleaned much more readily than damp cotton.

The terms "cleaning" and "extracting", as used in the ginning industry, refer to processes normally performed by separate and distinct machines, although some machines may do both cleaning and extracting. Cleaners usually employ a series of beater cylinders and concave screens or grid bars. These cylinders, with a tip speed of about 2,000 feet per minute, convey the cotton through the machine, scrubbing the locks of cotton over the concave surfaces and permitting the trash to sift out. The size of the openings limits the kind and size of trash

that can be scrubbed through. Therefore, only the smaller particles of broken leaf, dirt, and small sticks and stems can be removed with a minimum loss of cotton locks. Extractors accomplish trash removal by a toothed cylinder that seizes the cotton locks and slings the trash off by centrifugal force or removes it by striking against stripper rollers or grid bars. Clearances are large enough to convey the locks of cotton safely through, but the burs and larger pieces of trash are stripped off. The trash is directed to augers for discharge, while reclaimers pick up waste cotton locks and return them to the main cotton stream.

Cleaners and extractors can be either bulk machines or unit machines. As bulk machines, they handle all cotton being processed through the gin and are normally located in the overhead preceding the distributor. Unit machines serve only one gin stand and usually combine the process of cleaning and extracting, plus regulating the flow of cotton to the gin stand.

Cleaning is necessary in a gin to improve both gin stand performance and lint grade, but there are practical limits to both. Removal of trash reduces wear and tear on the gin stand, and cleaning improves gin stand efficiency by presenting cotton to it in small, uniform units. Removal of trash is also associated with grade improvement, but there exists a point of diminishing returns where the benefits of further trash removal are offset by fiber and cottonseed damage and excessive loss of weight. Most modern gins contain cleaning equipment to handle the most severe trash condition that is expected in their areas. However, actual use of cleaning equipment should be based on the incoming trash content of the cotton, and cleaner cottons should not be processed through every cleaning machine in the gin just because it is available. Bypass valves should be provided to omit certain machines for the cleaner cottons; trash removal should be restricted to that which is necessary to produce the grade determined by the color of the cotton. Further cleaning reduces the weight without increasing the value of the bale.

The range and type of trash in seed cotton varies throughout the Cotton Belt. Trash can be characterized as bolls, burs or hulls, sticks and stems, leaves, motes, grass, weeds, dirt, pin trash, and even tramp metal. Table 3–2 gives typical trash contents by types for cottons harvested by three machine methods. These methods account for over 99 percent of the cotton harvested in the United States.

In 1972 there were 3,710 cotton gin batteries in the United States. Information on seed-cotton cleaning equipment installed in cotton gins at that time is shown in table 3–3.

CYLINDER CLEANERS

Fine trash, leaves, and dirt are removed from seed cotton by machines generally classified as cleaners, or specifically as cylinder cleaners. The cylinders are usually spiked drums that open and clean the cotton by conveying and scrubbing it across surfaces with openings that allow the trash to sift through. The cleaning-surface configuration leads to further classification of cylinder cleaners as either screen,

(*Continued on page 22.*)

TABLE 3–2.—*Foreign matter in bales of cotton harvested by three methods*

[Pounds per bale]

Foreign matter	Machine-picked	Machine-stripped	Machine-scrapped
Hulls	29	450	329
Sticks and stems	9	115	143
Leaves and dirt	43	135	398
Total	81	700	870

Source: A. M. Pendleton and V. P. Moore. 1967. Ginning cotton to preserve fiber quality. U.S. Dep. Agric., Ext. Serv. [Rep.] ESC–560, 19 pp. Includes revised estimates.

TABLE 3–3.—*Cotton gin batteries with specified kinds of seed-cotton cleaning equipment*

[3,710 batteries, United States, July 1972]

Machine	Batteries having equipment	
	Number	Percent
Bur extractor	2,113	57.0
Stick and green-leaf machine	2,147	57.9
Combination[1]	400	10.8
Magnet	1,609	43.4
Green-boll trap	2,417	65.1
Other[2]	3,479	93.8

[1] Combination bur extractor, and stick and green-leaf machine.

[2] Includes all other seed-cotton cleaning equipment such as impact and incline cleaners, after cleaners, etc.

Source: Agricultural Marketing Service, Cotton Division. Cotton gin equipment, 1972. 16 pp.

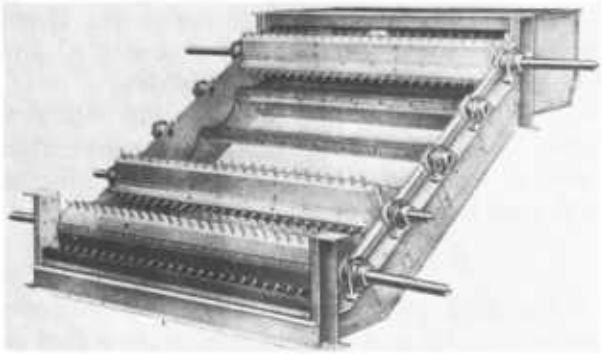

FIGURE 3–9.—Inclined screen cleaner.

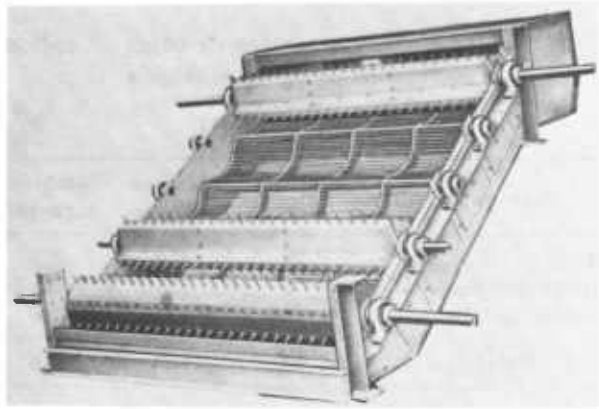

FIGURE 3–10.—Inclined cylinder cleaner equipped with grid-rod screen.

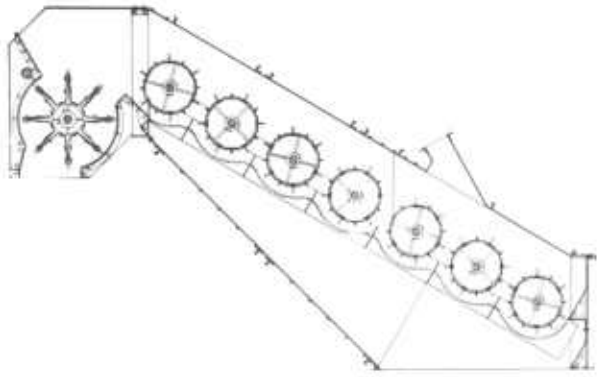

FIGURE 3–11.—Seven-cylinder inclined cleaner.

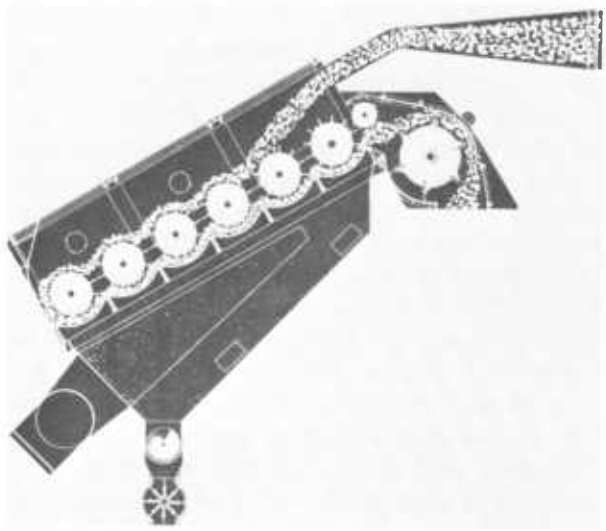

FIGURE 3–12.—Flow of cotton through an inclined cleaner.

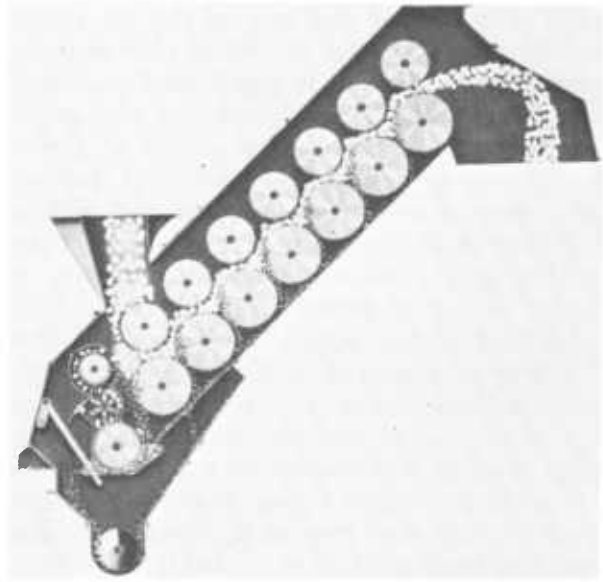

FIGURE 3–13.—Flow of cotton through a seven-cylinder revolving-screen cleaner.

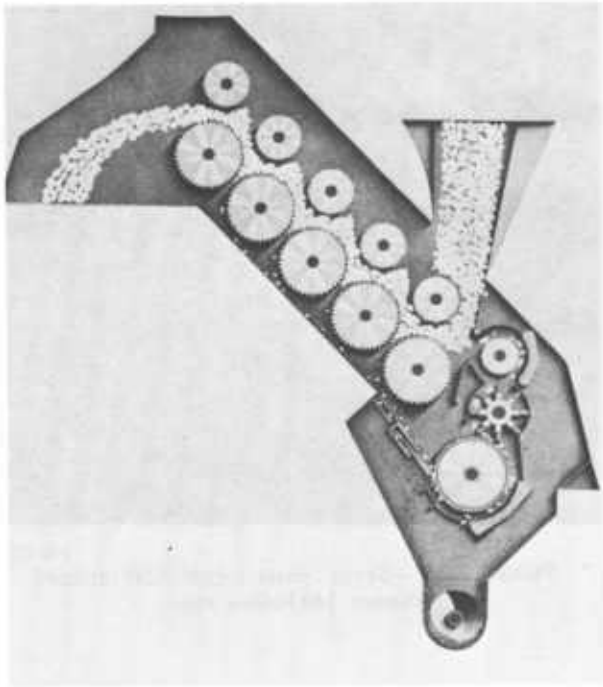

FIGURE 3–14.—Five-cylinder revolving-screen cleaner equipped with grid-rod reclaiming cylinders.

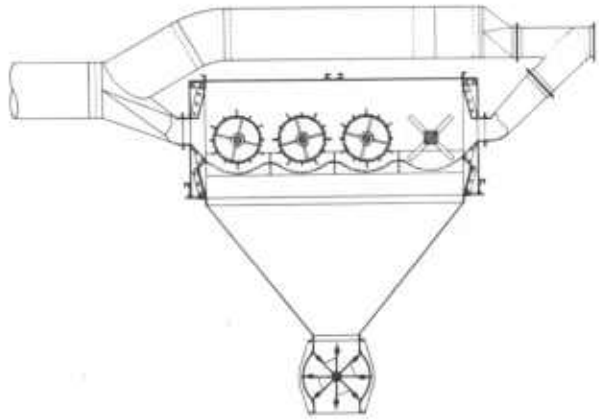

FIGURE 3–16.—Air-line cleaner.

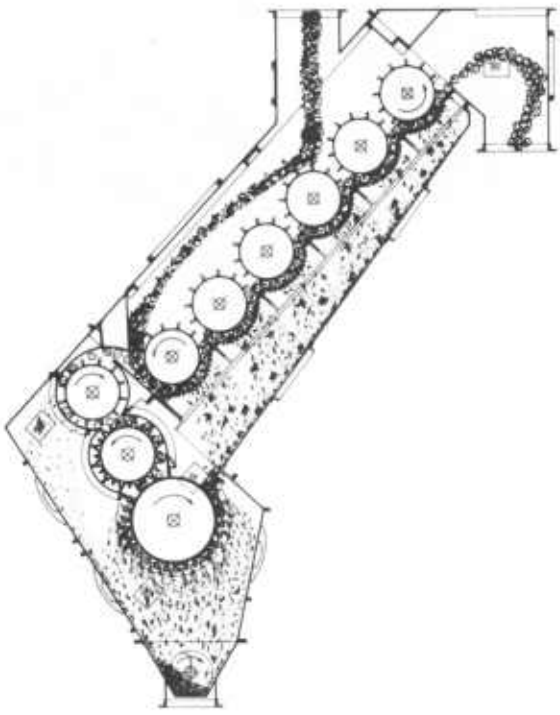

FIGURE 3–15.—Stick, leaf, and pepper trash extractor cleaner equipped with six cleaning cylinders plus an extracting unit.

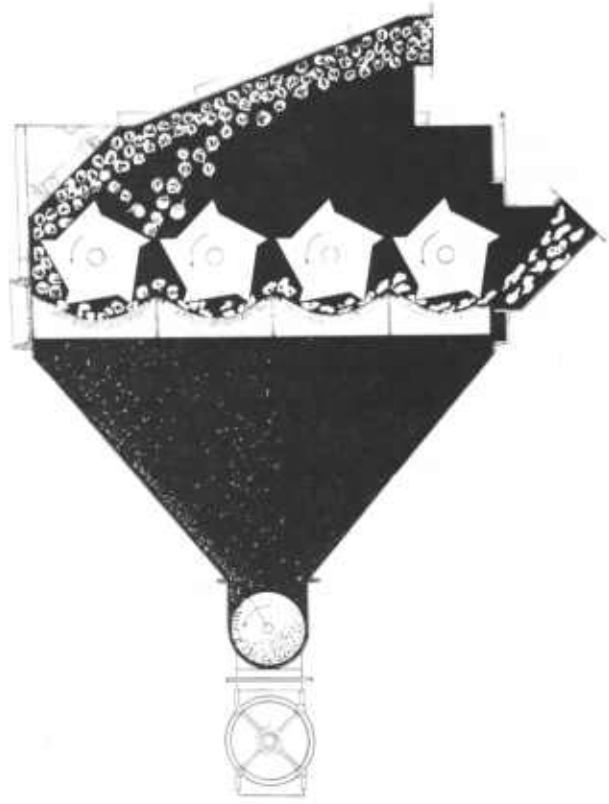

FIGURE 3–17.—Flow of cotton through an air-line cleaner.

grid bar, or revolving screen (impact). The screens may be either woven wire or perforated metal. A typical screen is made of 2- by 2-mesh, 0.105 woven galvanized wire cloth (fig. 3–9). Screen cleaners have largely been replaced by more efficient grid-bar cleaners that have ⅜-inch-diameter rods spaced five-sixteenths to five-eighths inch apart (figs. 3–10—3–12). In the revolving-screen, or impact, cleaner the cotton is conveyed across a series of revolving serrated disks. This cleaner also has a reclaiming cylinder (figs. 3–13 and 3–14). Some models of grid-bar cleaners have extracting sections (fig. 3–15).

Cylinder cleaners may also be classified as to how they are normally used in a cotton gin. In this respect they are either air-line, hot-air, or gravity-fed cleaners.

Air-line cleaners may have cylinders of the spiked-drum or crusher-plate type that permit only a horizontal flow of the seed cotton from the inlet to the outlet of the machine (figs. 3–16 and 3–17). They allow both air and seed cotton to pass entirely through the cleaner. Air-line cleaners are popular in the High Plains of Texas and in western Oklahoma as an effective means for removing sand from cotton and for breaking the bolls for further cleaning.

Hot-air and gravity-fed cylinder cleaners may have the cylinders arranged in an inclined or horizontal position (fig. 3–18). Hot air may enter the cleaner through a blow-in or push-pull fan arrangement. In many cases the first cleaner serves as a cleaning separator following the first drier. It may discharge into an extractor or a gravity cleaner for further cleaning (fig. 3–19).

For gins having a capacity above 12 to 14 bales per hour, two 6-foot-wide cleaners are usually installed in parallel, with each cleaning half the seed cotton under a split-stream arrangement.

The efficiency of cylinder cleaners is generally low when considered as individual machines; the efficiency is calculated from seed-cotton fractionation tests before and after cleaning. However, they are not normally used alone, but in combination with other machines, and serve a most useful function in opening the cotton or breaking up large wads and removing fine trash such as leaves, sand, and dirt. Since they do remove trash, they can improve grade as more cylinders of cleaning are added. Naturally, higher cleaning efficiencies are associated with cotton of higher trash content.

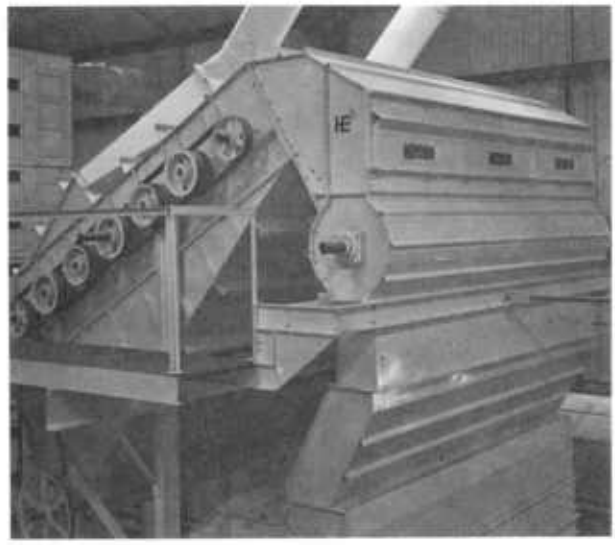

PN-5233

FIGURE 3–18.—Seven-cylinder dual-inlet inclined cleaner, 140 inches wide.

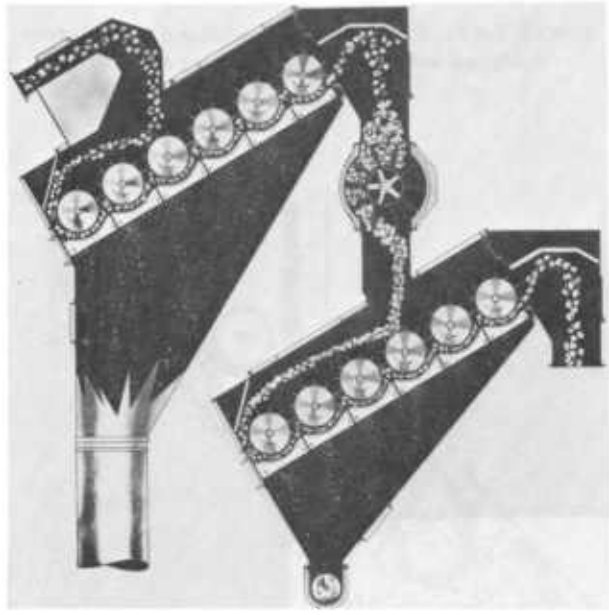

FIGURE 3–19.—Hot-air cleaner discharging into a gravity cleaner.

In early tests the cleaning efficiency of a seed-cotton cleaning setup consisting of a tower drier at 160° F, a bur machine, a seven-cylinder cleaner, and an extractor-feeder was reported to be 57.7 percent (Moore and Merkel 1953). When the cylinder cleaner was placed ahead of the bur machine in the system, cleaning effi-

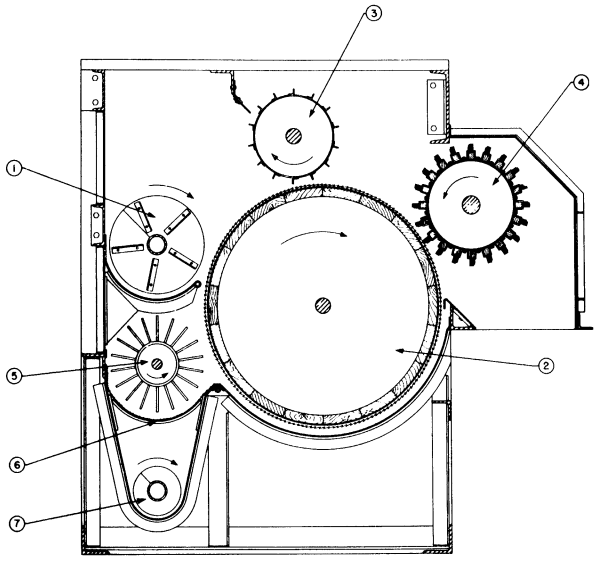

FIGURE 3–20.—Bur machine.

ciency increased to 71.8 percent. In later tests, the total cleaning efficiency of overhead seed-cotton cleaning and extracting systems for machine-picked cotton has been reported as 54 to 86 percent (U.S. Agric. Mark. Serv. 1958, Garner et al. 1970, Cocke and Garner 1972). The trash removed by a seven-cylinder cleaner has been reported to be 11.7 to 14.7 pounds per 1,000 pounds of seed cotton, from machine-picked cotton with an input trash content of 4.6 percent (Cocke 1972). In another test the individual cleaning efficiency of a six-cylinder cleaner was reported as 18.0 to 23.4 percent, on machine-picked cotton with input trash content of 7.0 to 17.3 percent (Read 1972).

Specifications of commercially available cylinder cleaners, as furnished by the manufacturers, are given in table 3–4.

EXTRACTORS

Burs and sticks are extracted from seed cotton by specially designed equipment generally classified as extractors. The trade usually refers to extractors by type, i.e., bur machine, stick and green-leaf machine, and extractor-feeder.

Bur machine.—The bur machine was developed in the 1920's in response to hand snapping and mechanical stripping of cotton in Texas. The bur machine has been widely adopted by the ginning industry, especially in stripper-harvesting areas. In 1973, 57 percent of all U.S. gins and 89 percent of all Texas gins had bur machines (U.S. Agric. Mark. Serv. 1973).

The bur machine utilizes a dislodging or stripping principle for extracting burs and sticks from seed cotton. Seed cotton is fed to a large-diameter saw cylinder by a kicker conveyor, which is a conventional auger with angle-iron flippers attached to the conveyor flighting (fig. 3–20). Seed cotton adheres to the saw-teeth and is carried past a stripping point near the top of the cylinder. At this point a flighted stripper roller, which clears the tips of the saw-teeth by one-fourth to one-half inch, dislodges burs and sticks from the surface of the cylinder and discharges this material back into the kicker conveyor. The kicker conveyor moves the dislodged material (including burs, sticks, fine trash, and some seed cotton) to one end of the machine, where it falls onto a spiked conveyor. The spiked conveyor moves the dislodged material back along the entire length of the saw cylinder so that seed cotton can be reclaimed from the dislodged material. Fine trash and dirt sift through a screened bottom to another auger located underneath the spiked conveyor.

Bur machines are usually employed about midway through the seed-cotton cleaning and drying processes. Normally, a bur machine is preceded by one stage of drying and a cylinder cleaner. They can be employed in single units or, for high-capacity gins, as multiple units in parallel, but are seldom operated in tandem.

Bur machines manufactured by the various gin machinery companies are similar in design and size. The saw cylinder is approximately 30 inches in diameter and operates at a speed of 110 to 140 revolutions per minute. The stripper roller is approximately 12 inches in diameter and operates at a 4-to-1 speed ratio with the saw cylinder. The operating speeds of the kicker conveyor and doffing brush are approximately equal to that of the stripper roller. Bur machines are supplied in lengths of 10, 14, and 18 feet, and have capacities of about one-half bale per hour per foot of length. Approximately three-quarter horsepower per foot of length is required to operate these machines.

TABLE 3–4.—*Sizes and characteristics of commercially available seed-cotton cylinder cleaners*

Manufacturer	Type	Width (ft)	Cleaning cylinders (No.)	Speed of cylinders (r/min)	Manufacturer's recommended capacity (bales/hour)	Power requirement range (hp)	Manufacturer's recommended capacity (bales/hour/foot of width)	Power requirement (hp/foot of width)
Continental/Moss-Gordin.	Inclined, gravity	6	6	400–500	10–15	10–15	1.7–2.5	1.7–2.5
		8	6	400–500	15–20	15–20	2.0–2.5	2.0–2.5
		10	6	400–500	20–30	20–25	2.0–3.0	2.0–2.5
	Impact, gravity	6	7	600 upper, 400 lower	10–15	10–15	1.7–2.5	1.7–2.5
		8	5	600 upper, 400 lower	15–20	15–20	2.0–2.5	2.0–2.5
		10	5	600 upper, 400 lower	20–30	20–25	2.0–3.0	2.0–2.5
Hardwicke-Etter	Air line	4–5	4 or 6	400–650	10–15	7.5	1.3–2.0	...
	Inclined, hot air and gravity.	6	7	407	12	15	2.0	2.5
		8	7	407	16	20	2.0	2.5
		12	7	407	25	30	2.1	2.5
Lummus	Air line	4–5	4	400–500	10–15	7.5	1.3–2.0	...
	Inclined, hot air and gravity.	4	6 or 9	450–500	6–8	7.5	2.0	[1]2.0
		6	6 or 9	450–500	9–12	15	2.0	[1]2.0
		8	6 or 9	450–500	12–16	15	2.0	[1]2.0
		12	6 or 9	450–500	18–24	25	2.0	[1]2.0
	Inclined, reclaimer	6	6 or 9	450	9–12	15	2.0	[1]2.0
		8	6 or 9	450	12–16	15	2.0	[1]2.0
Murray	Air line	4–5	4	400–500	10–15	7.5	1.3–2.0	...
	Inclined, hot air and gravity.	6	7	455	12	10–15	2.0	1.7–2.5
		8	7	455	16	15–20	2.0	2.0–2.5
		10	7	455	24	20–25	2.4	2.0–2.5

[1] Includes vacuum for hot-air cleaner. Applies to 6-cylinder cleaner only.

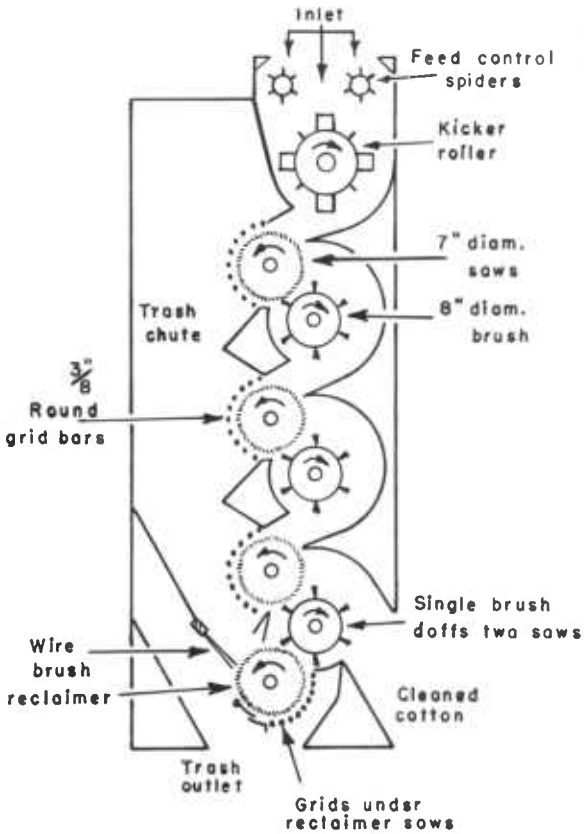

FIGURE 3–21.—USDA-developed stick remover.

The cleaning efficiency of a bur machine is dependent to a large degree upon the amount of trash in the seed cotton. Highest efficiencies are obtained when cleaning high-trash-content cotton. When extracting machine-stripped cotton, the bur machine can be expected to be about 65 percent efficient in removing burs and 35 percent efficient in removing sticks (Baker 1971 and Franks and Shaw 1959). Fine-trash removal by a bur machine is very low. In many cases, seed cotton will contain more fine trash after extracting with the bur machine than before extracting, because the bur machine tends to pulverize the large trash particles and produces more fine trash than it removes. This situation is particularly noticeable when processing seed cotton containing very dry and brittle burs and sticks.

The cleaning efficiency of the bur machine on machine-picked cotton is lower than it is on stripped cotton. The bur machine can be expected to remove 7 to 12 percent of the total trash from machine-picked cotton (Read 1972).

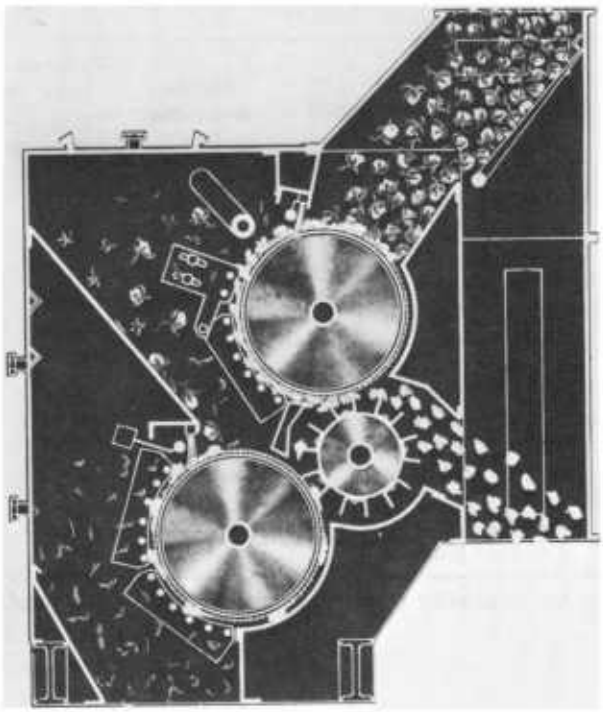

FIGURE 3–22.—Gravity-fed, two-saw stick machine with steel doffing cylinder.

Fine-trash removal from machine-picked cottons is also low.

Stick and green-leaf machine.—The stick and green-leaf machine (fig. 3–21) was developed by USDA in the early 1950's to meet the more stringent cleaning requirements imposed on gins of that era by the rapidly expanding practice of harvesting cotton mechanically (Franks and Shaw 1959). The basic principle introduced by USDA was rapidly adopted and further developed by gin machinery manufacturers. Early stick and green-leaf machines were sold as attachments for bur machines, but these attachments have been gradually replaced with individual machines commonly referred to as stick machines, stick removers, sling-off machines, or stick and green-leaf machines. The principle has also been incorporated into modern high-capacity extractor-feeders. In 1973, 59 percent of all U.S. cotton gins were equipped with at least one stick machine (U.S. Agric. Mark. Serv. 1973).

Stick machines utilize the sling-off action of high-speed saw cylinders to extract foreign matter from seed cotton by centrifugal force (fig. 3–22). Seed cotton is fed onto the saw cylinder, either by air or by gravity, and wiped

TABLE 3–5.—*Sizes and characteristics of commercially available stick and green-leaf machines*

Manufacturer and make	Widths available (ft)	Primary sling-off saw cylinder		Approximate capacity per foot of width (bales/hour)	Horsepower requirements per foot of width	Feeding method
		Diameter (inches)	Speed (r/min)			
Continental/Moss-Gordin:						
Little David	6,8	13¾	363	1–2	1.7	Air or gravity.
Super II	6,8,10	16	320	1.5–2	1.9–2.5	Do.
Super III	8,10	16	340	1.5–2	1.9–2.5	Gravity.
Hardwicke-Etter:						
Hustler, AG	6,8	18	315	1	1.7–1.9	Air or gravity.
Hustler, G	6,8	18	300	1	1.7–1.9	Gravity.
Hustler, G–2	6,8,12	18	365	1.3–1.5	2–2.5	Do.
Lummus:						
Little Giant	6,8,12	17½	260–350	1.5–2	2–2.5	Air or gravity.
S. & G.H. Machine	8,12	30	140–150	1.5–2	3.3–3.8	Do.
Murray:						
H-L-S-T	6,8,10	20	330	1.6–1.8	1.9–2.5	Do.[1]
Compact Machine	6,8	20	330	1.6–1.8	1.9–2.5	Gravity.

[1] Air or gravity for 6- and 8-foot widths, gravity only for 10-foot width.

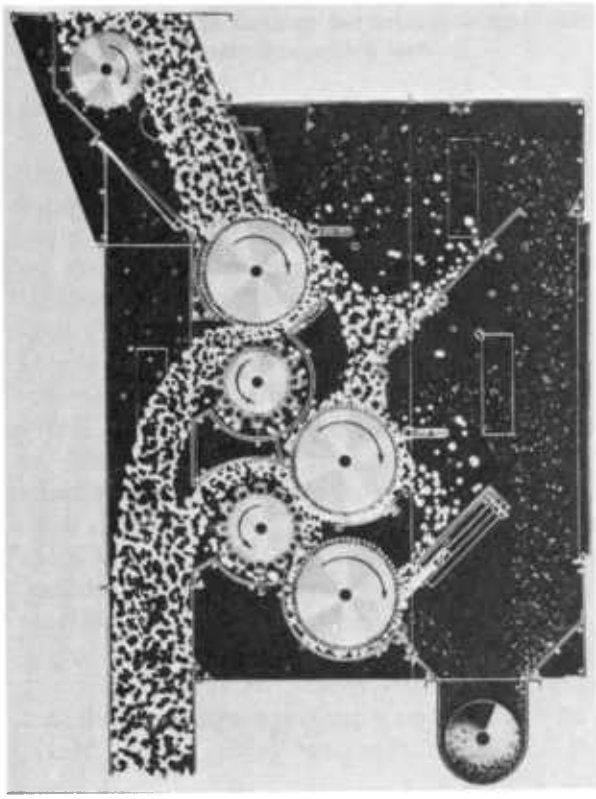

FIGURE 3–23.—Gravity-fed stick, leaf, and hull remover.

onto the sawteeth by one or more stationary wire brushes. Foreign matter is slung off the saw cylinder by centrifugal forces 25 to 35 times that of gravity. During this process, some seed cotton is extracted with the trash. Grid bars or additional wire brushes are strategically located about the periphery of the saw cylinder to control this loss of seed cotton. However, it has been found that some loss of seed cotton is unavoidable if satisfactory cleaning efficiencies are attained. Additional saw cylinders are used to reclaim the seed cotton extracted with the trash. Reclaimer saw cylinders resemble the sling-off saws, but usually operate at slower speeds and are equipped with more grid bars.

Stick machines are usually preceded by one or two stages of drying and at least one stage of cleaning. They may be fed by air or gravity; the trend in recent years has been to gravity feeding by a separator or cylinder cleaner. Gravity feeding is more uniform and less troublesome than air feeding, and a cylinder cleaner opens stripped cotton for more efficient cleaning by the stick machine and reduces seed-cotton losses. Depending upon capacity requirements, stick machines may be employed as single or multiple parallel units.

Table 3–5 summarizes the sizes and characteristics of commercially available stick machines. Machines are available in widths of 6, 8, 10, and 12 feet for approximate single-unit capacities of 9, 12, 15, and 18 bales per hour,

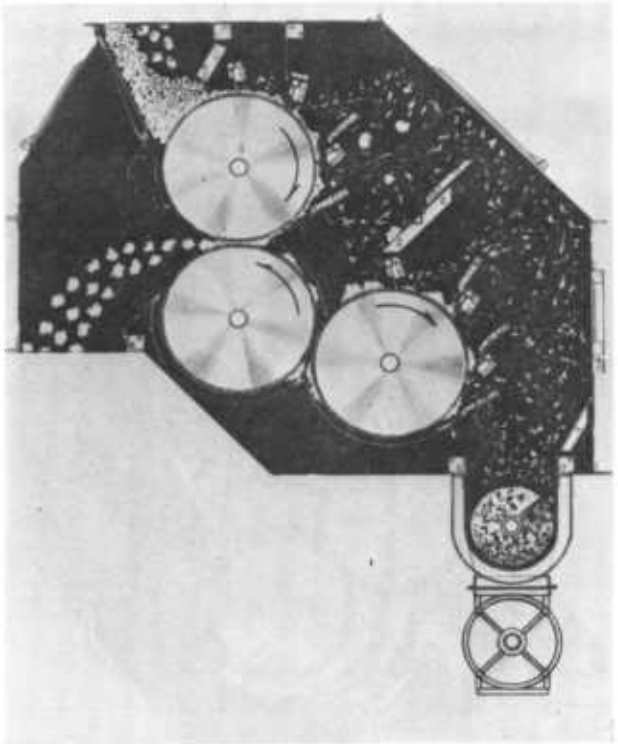

FIGURE 3–24.—Gravity-fed, two-saw stick machine with saw doffing cylinder.

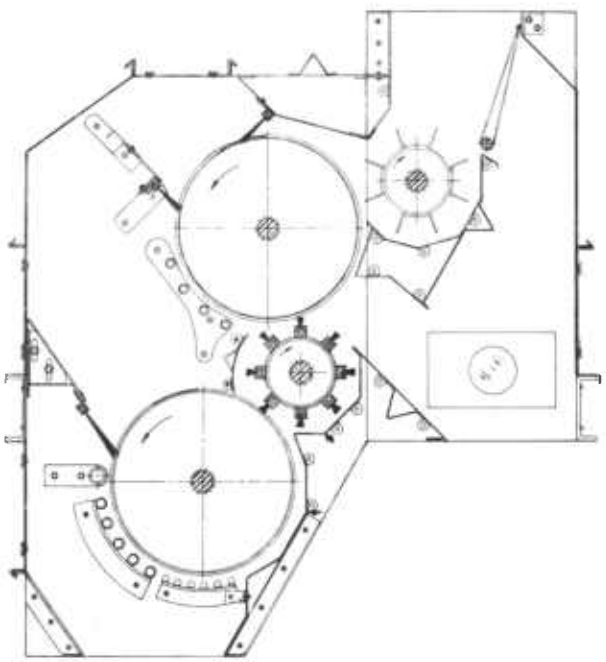

FIGURE 3–25.—Gravity-fed, two-saw stick machine with brush doffing cylinder.

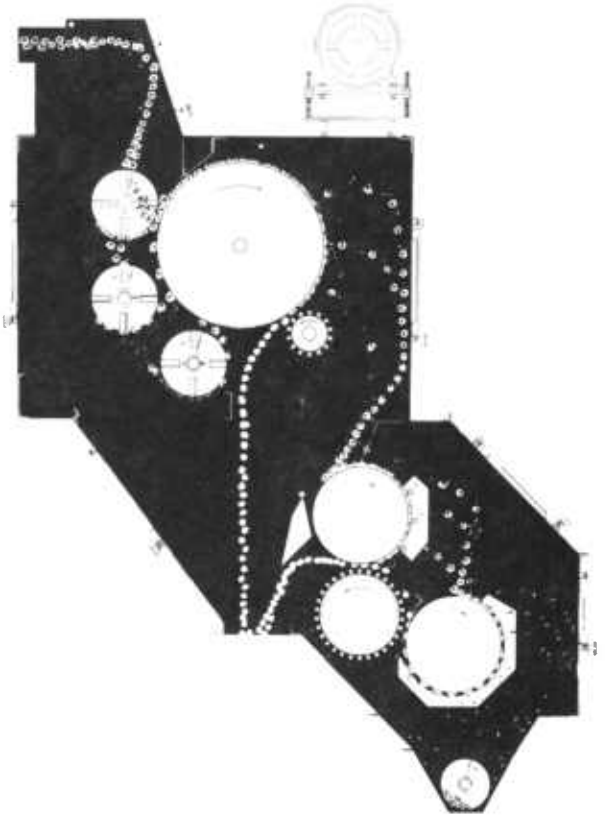

FIGURE 3–26.—Extractor utilizing both stripping mechanisms and sling-off forces.

respectively. Some models of stick machines have two sling-off saws (fig. 3–23), while others use only one (fig. 3–24). All models have at least one reclaimer saw. The trend in recent years has been to use one large-diameter (16 to 18 inches) sling-off saw and one reclaimer saw (fig. 3–25).

Most stick machines use a stationary wire brush to implant the cotton fibers firmly into the sawteeth. However, one model uses a feeding method somewhat similar to a bur machine (fig. 3–26). This model, which was designed for stripper and ground-salvaged cotton, also contains a stationary stripper in addition to brushes and grid bars.

Cleaning efficiencies of stick machines vary widely depending upon the condition and trash content of seed cotton. For machine-stripped cotton, commercial stick machines can be expected to remove approximately 65 percent of the burs, 50 percent of the sticks, and 10 percent of the fine trash (Baker 1971, Baker and Laird 1973). The efficiency for machine-picked cotton is about 13 to 20 percent for total trash in the seed cotton (Read 1972).

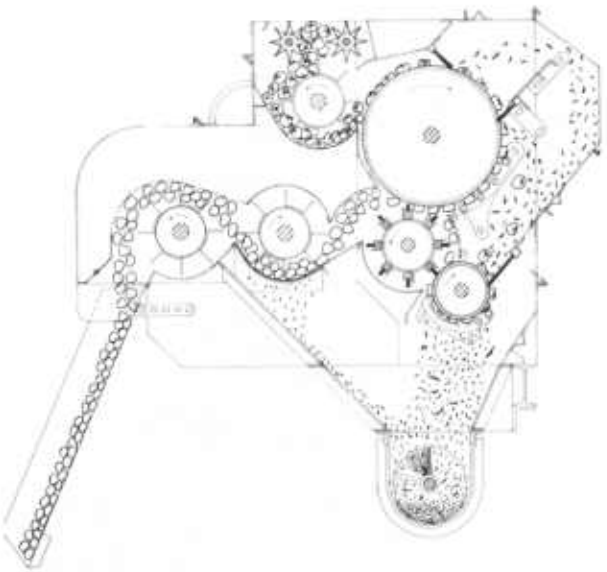

FIGURE 3-27.—High-capacity feeder with extracting and cleaning features.

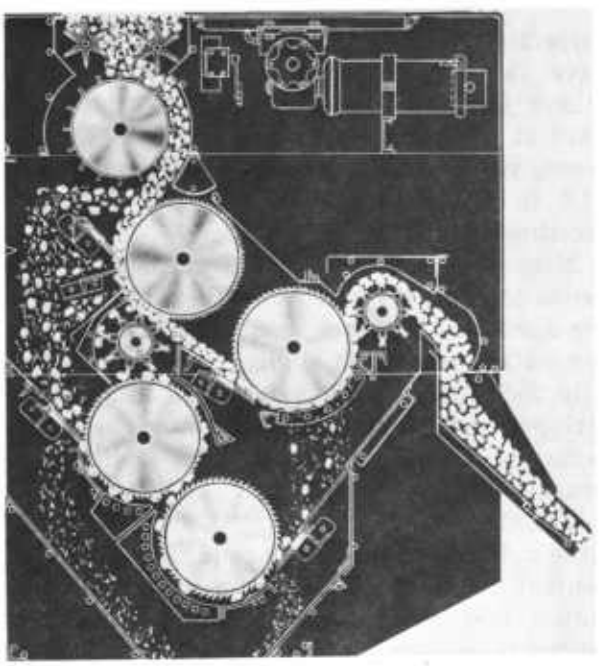

FIGURE 3-28.—High-capacity feeder with two stages of sling-off extraction.

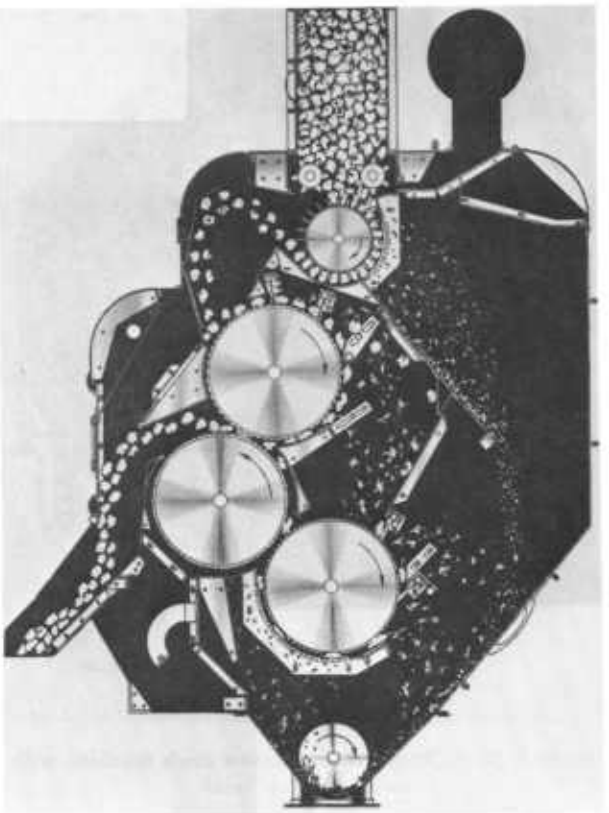

FIGURE 3-29.—High-capacity feeder utilizing sling-off extracting principle.

Extractor-feeder.—Gin stand feeders with extracting capabilities have been used since the early 1900's (Bennett 1962). Early extractor-feeders were based on the stripping or dislodging principle utilized by bur machines. However, after development of the stick machine, most manufacturers abandoned the stripping principle in favor of the stick machine's more efficient sling-off principle. Also, the introduction of high-capacity gin stands in the late 1950's forced manufacturers to simplify and streamline feeders in order to achieve desired capacities. This was accomplished by adopting the sling-off principle of a stick machine (figs. 3-27—3-29).

The primary function of a modern high-capacity extractor-feeder is to feed seed cotton to the gin stand uniformly and at controllable rates, with extracting and cleaning as a secondary function. The feed rate of seed cotton is controlled by the speed of two star-shaped feed rollers located at the top of the feeder directly under the distributor hopper. These feed rollers are powered by variable-speed hy-

draulic or electric motors, controlled manually or automatically by various interlocking systems with the gin stand. The drive may be designed to automatically start and stop as the gin breast is engaged or disengaged; the system may also be designed to stop feeding seed cotton in cases of gin stand overloads or underloads. Many of the systems are designed to maintain constant seed-roll densities. This is usually accomplished by modulating the speed of the feed rolls in response to feedback control signals from the gin stand, generated by (1) monitoring the power consumption of the electric motor driving the gin stand, (2) measuring displacements of the cove board in a seed-roll box, or (3) monitoring the pressure required to drive a hydraulically powered seed-roll agitator.

REFERENCES

Baker, R. V. 1971. Comparative performances of a stick machine and a bur machine on machine-stripped cotton. U.S. Dep. Agric. Tech. Bull. 1437, 16 pp.

———, and Laird, W. 1973. Extracting sticks from machine-stripped cotton. Trans. ASAE 16: 497–499.

Bennett, C. A. 1962. Cotton ginning systems and auxiliary developments. Texas Cotton Ginners' Association.

Cocke, J. B. 1972. Effect of processing rates and speeds of cylinder-type cleaners on ginning performance and cotton quality. U.S. Dep. Agric., Agric. Res. Serv. [Rep.] ARS 42–199, 9 pp.

———, and Garner, W. E. 1972. Effect on ginning and spinning efficiency and cotton quality of fiber moisture, seed-cotton cleaning, and lint cleaning. U.S. Dep. Agric. Prod. Res. Rep. 143, 14 pp.

Franks, G. N., and Shaw, C. S. 1959. Stick remover for cotton gins. U.S. Dep. Agric. Prod. Res. Rep. 22, 39 pp.

Garner, W. E., Shanklin, E. H., and LaFerney, P. E. 1970. Fiber quality and ginning performance of machine picked and stripped cotton, Southeastern area, 1964–66. U.S. Dep. Agric. Mark. Res. Rep. 852, 30 pp.

Moore, V. P., and Merkel, C. M. 1953. Cleaning cotton at gins and methods for improvement. U.S. Dep. Agric. Circ. 922, 50 pp.

Pendleton, A. M., and Moore, V. P. 1967. Ginning cotton to preserve fiber quality. U.S. Dep. Agric., Ext. Serv. [Rep.] ESC–560, 19 pp. (Includes revised estimates.)

Read, K. H. 1972. Cylinder cleaner speed influences cleaner efficiency. The Cotton Gin and Oil Mill Press, Nov. 25, 1972, pp. 6–7.

U.S. Agricultural Marketing Service. 1958. Effects of cleaning practices at gins on fiber properties and mill performance of cotton. U.S. Dep. Agric. Mark. Res. Rep. 269, 20 pp.

———. 1972. Cotton gin equipment 1972, 16 pp.

———. 1973. Cotton gin equipment, July 1973.

Gin Stands

By T. E. Wright and Vernon P. Moore

The gin stand is the heart of the gin plant. The capacity of the plant and the quality and potential spinning performance of the ginned lint depend on the stand's being in good condition and in proper adjustment. The gin stand can affect every commonly measured fiber property except fiber strength and micronaire.

All stands are adjusted before leaving the factory, but during handling and shipping the settings may change. It is therefore important, even in new gins, to check all settings and to make necessary adjustments in accordance with the manufacturer's instructions. A number of points are common to practically all gin stands, and attention to these details will contribute to better operation and preservation of quality. Some of the more important adjustments and settings for various makes and models of gins are shown in figures 3–30 through 3–35. Machinery manufacturers will furnish up-to-date manuals that give detailed instructions on installing, adjusting, and operating their gin stands.

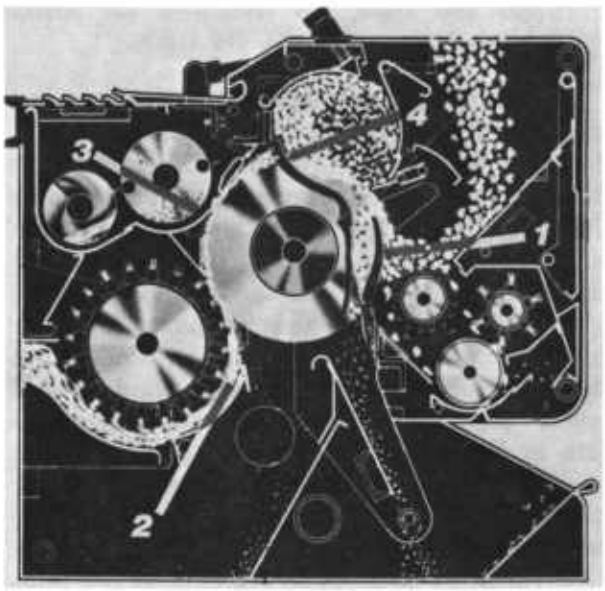

Figure 3–30.—Important settings and adjustments for Continental/Moss-Gordin Comet 141 saw-brush gin. 1, Saw projection through huller rib, ⅜". 2, Gravity mote board to brush, 1½". 3, Overhead mote board to saw, $\frac{3}{16}$". 4, Ginning point to point of rib, 2". Saw speed, 700 revolutions per minute (r/min). Brush speed, 1,850 r/min.

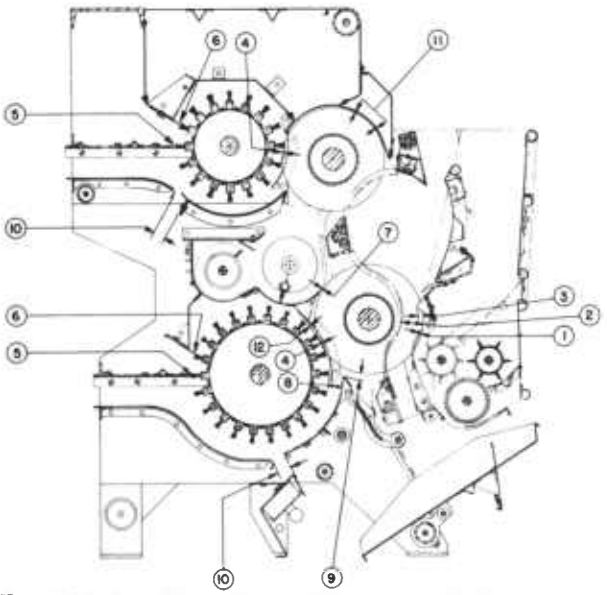

FIGURE 3–31.—Important settings and adjustments for Hardwicke-Etter Regal 224 dual saw-brush gin. 1, Saw projection through split rib, $\frac{3}{16}$". 2, Saw projection through gin rib, 2⅜". 3, Huller knife projection into saw, ½" to ⅝". 4, Brush to saw, throat of tooth. 5, Lower cutoff plate to brush, $\frac{1}{16}$" or closer. 6, Upper cutoff plate to brush, ⅛". 7, Mote board to saw, $\frac{1}{16}$" to $\frac{3}{32}$". 8, Mote board to brush, $1\frac{1}{16}$". 9, Lower mote board to saw, ¾". 10, Airgap, nonadjustable. 11, Upper scroll to saw, $\frac{3}{32}$". 12, Top brush scroll to brush, ¼" minimum. Upper saw speed, 695 revolutions per minute (r/min). Lower saw speed, 650 r/min.

When installing new equipment, the gin stand should first be placed in correct alinement with the other machinery, leveled, and bolted to the floor before any adjustments are made. After checking the settings and making the necessary adjustments, the gin breast is placed in the ginning position and the saw cylinder rotated by hand to make sure that all parts are clear and that no foreign objects are within the gin stand. Before running the gin stand at full speed, "jog" the drive motor to see if all cylinders of the gin stand are free to turn. Then turn the motor on and check the saw speed. It is very important that the saw speed be very close to the recommended speed, since as little variation as 20 to 25 revolutions per minute above or below the manufacturer's recommendations can make an appreciable difference in performance.

Gin manufacturers have made their gin stands as safe to operate as they know how; however, gin stand operation still can be haz-

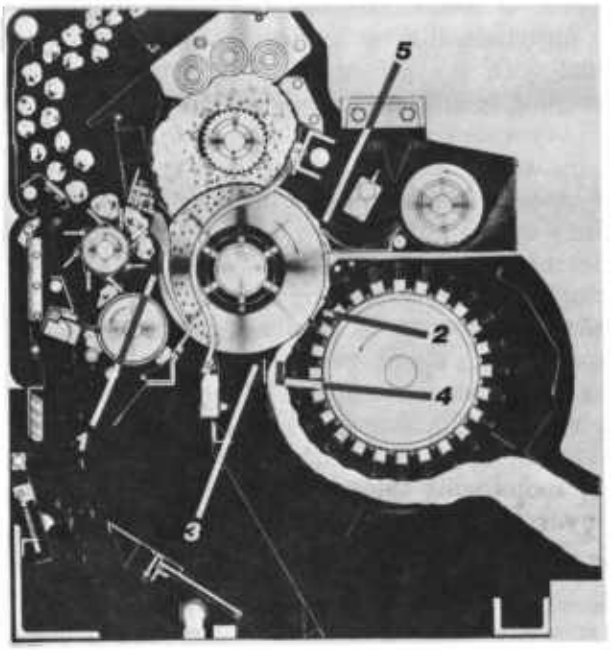

FIGURE 3–32.—Important settings and adjustments for Lummus Imperial 128 saw-brush gin. 1, Saw projection through huller rib, ½" to $\frac{9}{16}$". 2, Brush to saw, depth of sawteeth. 3, Mote board to saw, ¼". 4, Mote board to brush, 1¾". 5, Overhead mote lip to saw, ⅛". Saw speed, 830 to 855 revolutions per minute (r/min). Brush speed, 1,770 r/min.

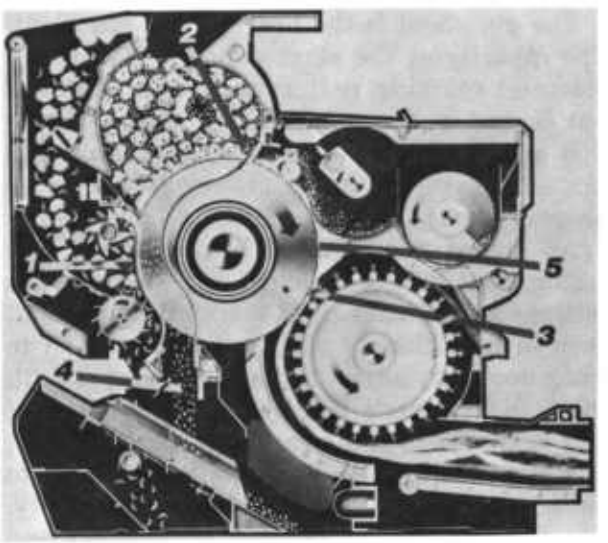

FIGURE 3–33.—Important settings and adjustments for Murray 142–18 brush gin. 1, Saw projection through huller rib, $\frac{3}{16}$". 2, Ginning point to point of rib, 2". 3, Brush to saw, depth of sawteeth. 4, Foot of huller rib to ginning rib, 3". 5, Mote bar to saw, $\frac{3}{32}$". Saw speed, 545 revolutions per minute.

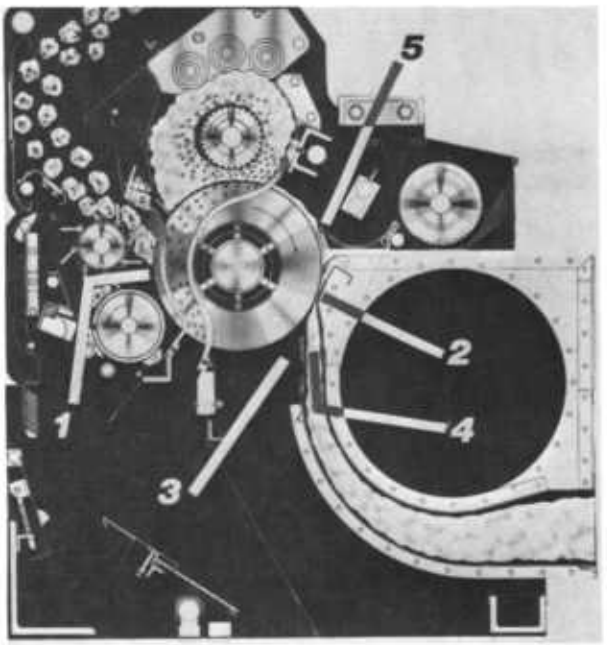

FIGURE 3–34.—Important settings and adjustments for Lummus Imperial 128 saw airblast gin. 1, Saw projection through huller rib, ½" to $\frac{3}{16}$". 2, Airblast nozzle to saw, $\frac{1}{16}$". 3, Airblast mote board to saw, ¼". 4, Airblast throat opening, $1\frac{13}{16}$". 5, Overhead mote lip to saw, ⅛". Saw speed, 830 to 855 revolutions per minute. Airblast pressure, 16" to 19" of water.

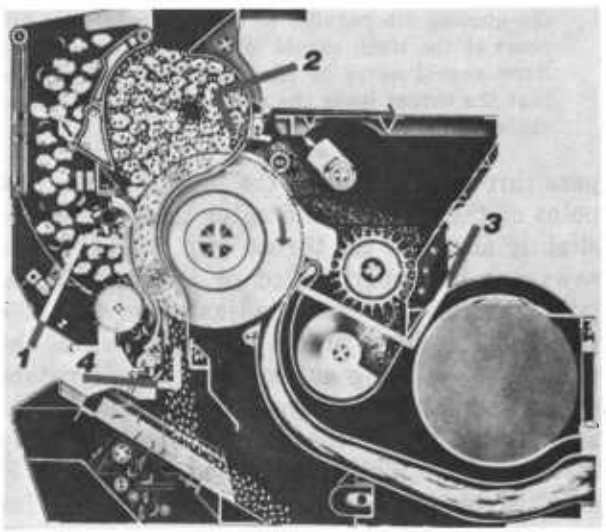

FIGURE 3–35.—Important settings and adjustments for Murray 120–18 airblast gin. 1, Saw projection through huller rib, $\frac{3}{16}$". 2, Ginning point to point of rib, 2". 3, Airblast nozzle to saw, $\frac{3}{32}$". 4, Foot of huller rib to ginning rib, 3". Saw speed, 456 revolutions per minute. Airblast pressure, 10" to 16" of water.

ardous unless proper precautions are taken. Other than the manipulation of the normal operating controls, no adjustments or maintenance should be attempted while the gin stand is in operation. The gin stand should always be stopped and the power turned off and locked out before making adjustments to the settings or attempting maintenance work.

GIN BREAST

After installing new stands or repairing old ones, be sure that the lateral adjustment of the breast is correct. The saws should be positioned in the center of the rib slots. After visual inspection, the saw cylinder should be rotated slowly by hand to make certain that none of the saws rub the ribs.

When the gin breast is removed from a gin stand, it should be identified with *that* gin stand, and special care should be taken to be sure the breast is reinstalled on the *same* gin stand from which it was removed.

When replacing a broken rib, care should be taken to install the replacement so that the saw opening is the same on each side. It is generally more satisfactory to have worn ribs replaced by the manufacturer or a competent gin service company. A matched set of ribs installed by well-equipped and experienced personnel will usually give better service than unmatched sets installed without proper jigs.

Never move the breast into ginning position when there is seed cotton in the roll box, unless the saws are running. To do so may damage the ribs or buckle the saws.

On many gins the picker roller is adjustable. In some cases it can be adjusted by means of a ratchet lever while the gin is in operation. Generally speaking, it should be set as far away from the saw or huller ribs as possible without dropping cotton. The closer the picker roller is set to the huller ribs, the less space there is for hulls to fall out and the more the saw will break the hulls up and pull small pieces into the roll box with the cotton.

The seed fingers, or lambrequin, should be set as widely open as possible but close enough that the seed will be clean. When building up a new roll, close the seed fingers and then slowly open them as widely as possible, consistent with clean seed, to allow the cleaned seed to fall out of the roll box. Holding seed in the roll box longer than necessary will reduce the ginning

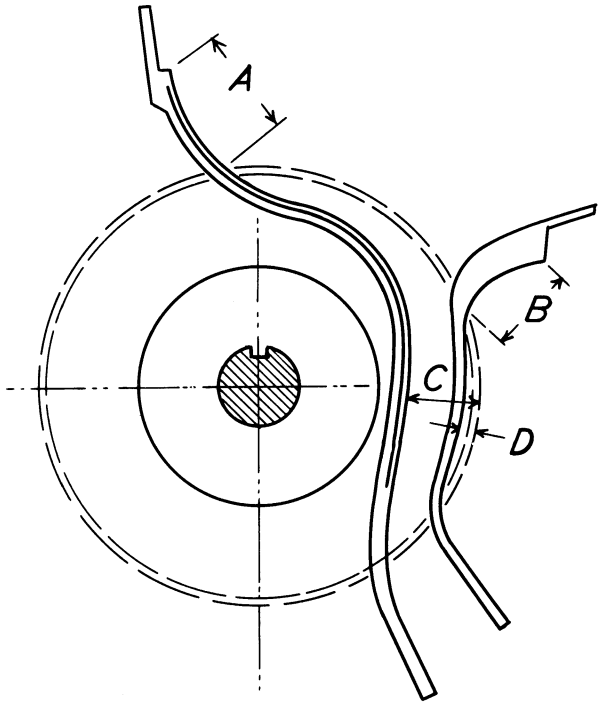

FIGURE 3–36.—Critical saw-rib dimensions (*A*, *B*, *C*, and *D*) vary with manufacturer's make and model. Specifications should be followed for maintaining cotton quality and gin stand capacity.

rate and cause tight seed-roll operation, which reduces the value of the cotton.

The relation of the saws to the ribs is critical. Consult the manufacturer's manual to determine which of the dimensions shown in figure 3–36 should be checked to insure proper saw-rib relations.

GIN SAWS

Saws should be checked to make sure they are properly trained and are running in the middle of the rib slots at the recommended speed. If the distance from the point where the saws project through the ginning rib to the top of the rib is not correct, capacity will be reduced and fibers will be damaged. The distance the saws project through the huller ribs should also be checked. If the saws project too far, an excess of hulls and sticks will be pulled into the roll box. If the saws do not project far enough, ginning capacity will be reduced, seed cotton will fall out of the front, and the huller ribs may choke.

The pitch and shape of the sawteeth are also important in maintaining capacity and cotton quality. To insure good ginning, the teeth must

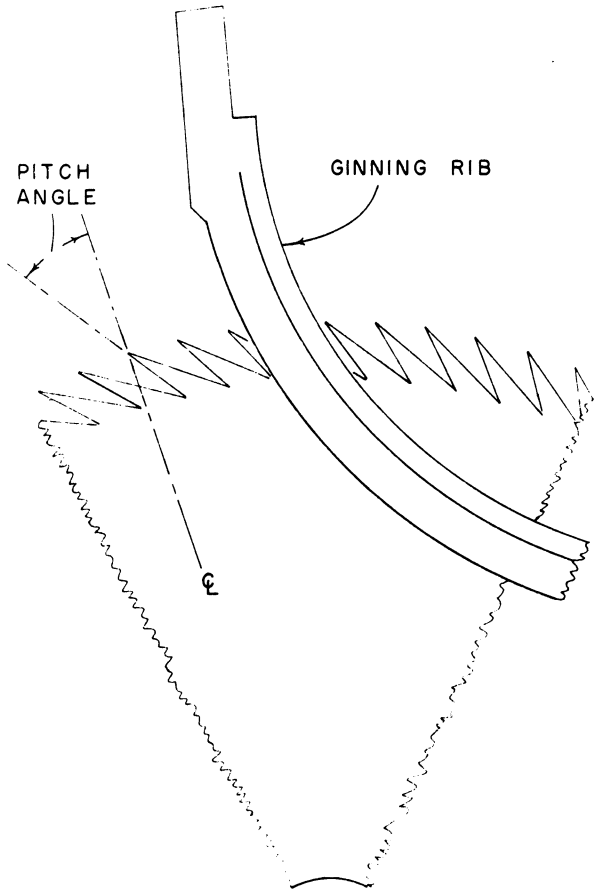

FIGURE 3–37.—Leading edge of the tooth should enter the ginning rib parallel to the rib surface, or the point of the tooth should lead the throat slightly. Saws should never be filed or breast adjusted so that the throat leads the point of the tooth. CL = centerline.

pass through the ribs at the proper angle. The point of the tooth should enter the ginning rib slightly ahead of the throat (fig. 3–37). If the saws are improperly filed or the saw-rib relationship is improperly adjusted so that the throat of the tooth enters the rib ahead of the point, the resulting cutting action will reduce capacity and break fibers and may cause chokages at the top of the ginning ribs. In many instances, the moting action of gin stands is affected by the sawteeth being tilted too far forward or backward.

Saws should be examined frequently, and bent teeth should be straightened or even broken off so that lint will not remain hung in them. Lint that cannot be doffed will tend to collect in the low part of the gin ribs. If this lint is allowed to accumulate, the friction of the

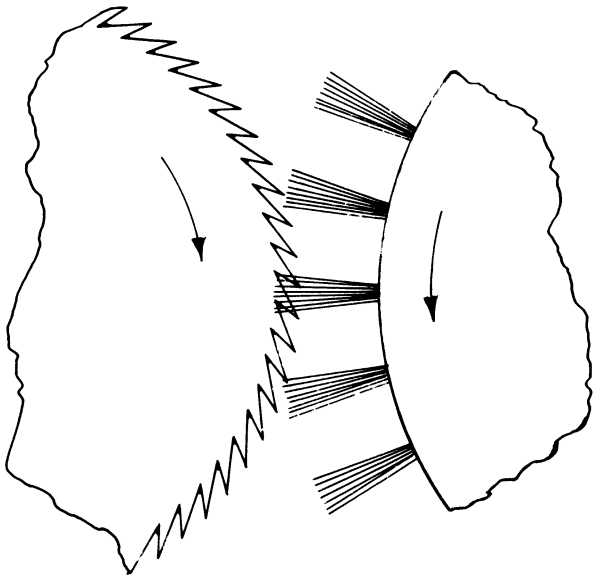

FIGURE 3–38.—For proper doffing, the gin brush should be set to mesh with the saw the depth of the sawteeth.

saw will cause it to catch fire and can damage the saws. A heat-damaged saw that wobbles cannot be retrained and should be replaced or cut out immediately. Lint collected in the bottom rib slot can also be grabbed by the saw when the stand is disengaged, possibly breaking the ribs and damaging the saws.

The number of bales that can be ginned between changes or sharpening of the saws depends on the type of cotton being handled and on the material the saws were made from. Rough cotton causes more wear on the gin saw than clean cotton, regardless of the type of steel used. Modern gin saws are made from stronger, more durable steel than older saws, which has resulted in greatly increasing the useful life of the gin saw. The high-capacity gin stands of current and older design are equipped with such durable saws that they can gin 2,000 to 3,000 bales per stand before changing. Processing trashy cotton with minimum overhead cleaning will make more saw changes necessary. The general practice in high-capacity ginning is to replace rather than attempt to sharpen worn saws. Sharpening of saws is still essential for the older outfits, especially those equipped with 80, 90, and 120 12-inch-diameter saw stands. Usually, saws of these older model stands should be sharpened after ginning 400 to 900 bales per stand, depending on the number of saws per stand and the type of cotton being ginned. Sharpening reduces the diameter of the saw. After several sharpenings, gin capacity will have been so reduced that new saws are needed. Many ginners find it uneconomical to continue to use saws that have been sharpened more than three or four times. Saws should be sharpened by the manufacturer or a competent gin service company. However, if a ginner elects to sharpen his own saws, he should take extreme care to maintain the original tooth shape and pitch. The edges of the teeth should be deburred after sharpening.

When changing saws, it is best to keep saws of the same diameter on a mandrel. If new saws are mixed with saws that have been reduced one thirty-second or one-sixteenth inch in diameter, it will be impossible to adjust the gin breast properly to the saws. At least one spare saw cylinder should be on hand during the ginning season.

DOFFING SYSTEM

Brushes.—For proper doffing, the brush should mesh to the depth of the sawtooth (fig. 3–38). Belts driving the brush must be kept tight to maintain proper speed for doffing and to provide sufficient air velocity in the lint flue to prevent backlash.

The brushes should be examined periodically and replaced if the bristles are badly worn. They should be returned to the manufacturer for repair if facilities are not available in the field for rebalancing them. Brushes that are out of balance will cause excessive vibration and bearing wear.

When replacing brushes in the stand, take care to adjust the shaft and bearings to eliminate lateral motion or "end play" and to check the setting of the brush to the saw, mote board, and cutoff plate according to the manufacturer's recommendations.

Airblast nozzles.—The manufacturer gives specific instructions for setting the airblast nozzle for each model of gin stand; follow these instructions to insure proper doffing and moting.

Keep the nozzle clean and free of tags, and avoid damaging the nozzle or the gin saws when removing a saw cylinder. Many tags may be prevented by periodically removing the cap from the end of the airblast trunk and starting

TABLE 3–6.—*Saws and capacities of various makes and models of gin stands recommended by manufacturers*[1]

Manufacturer	Model year	Saw cylinders (No.)	Saw diameter (inches)	Saws (No.)	Capacity (bales/hour)
Bush-Hog/Continental	1962	1	12	120	3–3.5
Do	1962	1	16	79	4
Do	1962	1	16	119	6
Do	1973	1	16	93	5
Do	1973	1	16	141	7.5
Hardwicke-Etter Co.	1962	1	12	120	3
Do	1973	2	([2])	178	5
Do	1973	2	([2])	224	6–8
Lummus Industries, Inc.	1962	1	12	88	4–5
Do	1973	1	12	128	8
Murray-Piratininga	1962	1	12	120	3
Do	1962	1	18	80	4–5
Do	1968	1	18	94	5–6
Do	1968	1	18	120	6
Do	1973	1	18	142	8

[1] Data are averages and will vary considerably for different types of cotton.
[2] Bottom saw, 12 inches; top saw, 11¾ inches.

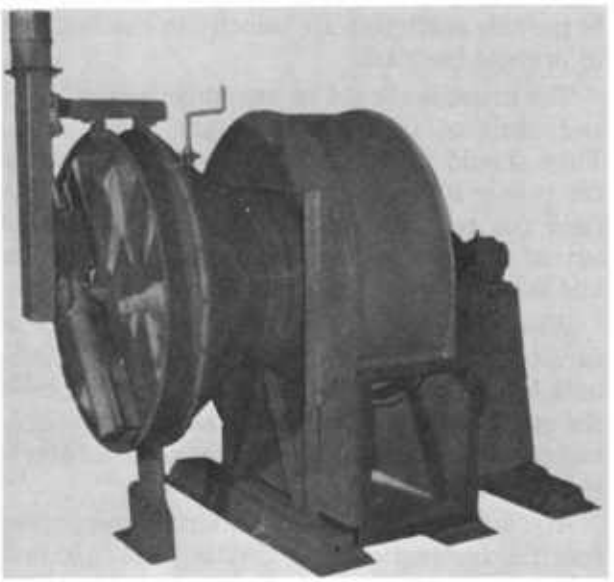

PN-5234

FIGURE 3–39.—Airblast fan equipped with intake control vanes, screen, and screen wiper.

the fan to blow out the accumulation of dust and fly.

Check the airblast pressure frequently to make certain that correct doffing pressure is being maintained. For most gins, the correct pressure will be in the range of 10 to 19 inches of water. Sufficient pressure should be maintained to give proper doffing without wasting power. Manufacturers can supply an adjustable airblast fan valve by which the air pressure can be readily adjusted (fig. 3–39). It is important that the airblast fan inlet be equipped with a screen to keep foreign matter out of the fan. It is equally important that the screen be kept clean.

MOTING SYSTEM

Modern gin stands are equipped with both overhead and gravity moting systems. The seals on the overhead moting system, whether dropper wheel or roller type, should be kept in good condition. In some gins, pressure is maintained in the overhead moting chamber, and the system will not operate properly if the seals leak excessively. Honeydew and green wet lint sometimes cause motes to be sticky and build up on the moting bars, wiper flights, and roller seals, drastically reducing moting system effectiveness. Under extreme conditions the buildup will cause chokage in the gin ribs. When sticky motes are encountered, clean the moting bars and seals frequently with fine steel wool, and

coat the surfaces with a light textile oil, silicone, or Teflon spray.

Proper adjustments are also important on gins having a mote board in the gravity moting system. To adjust the mote board, open it slowly until it starts dropping lint, then close it slightly. The wider the mote board can be opened without losing lint, the more effectively the system will operate.

GINNING CAPACITY

The high-capacity gin stands now on the market are the result of years of research. They will give good service as long as they are kept in good condition and in proper adjustment. Manufacturer's capacity recommendations for 1962 and 1973 model gin stands are given in table 3–6. The gins can be made to gin faster, but the quality of the cotton will be reduced.

Lint Cleaning

By Gino J. Mangialardi, Jr.

Lint cleaners were developed specifically for removing leaf particles, motes, grass, and bark left in the cotton by seed-cotton cleaners and extractors. They have been developed and improved in conjunction with the transition from manual to mechanized harvesting of the cotton crop, which is virtually complete. Nearly all gin batteries in the United States have lint-cleaning facilities, and over four-fifths of all gin batteries with lint cleaners have two or more stages of cleaning (U.S. Agric. Mark. Serv. 1972). The lint cleaners now being marketed are of two general types, the flow-through air type and the controlled-batt saw type.

FLOW-THROUGH AIR LINT CLEANER

The flow-through air lint cleaner, commercially known as the air jet, has no saws, brushes, or moving parts. It is usually installed immediately behind the gin stand. Loose lint from the gin stand is blown through a duct within the chamber of the cleaner. Air and cotton moving through the duct make an abrupt change in direction as they pass across a narrow trash-ejection slot (fig. 3–40). Foreign matter that is heavier than the cotton fibers and not too tightly held by fibers is ejected through the slot by inertial force. The amount

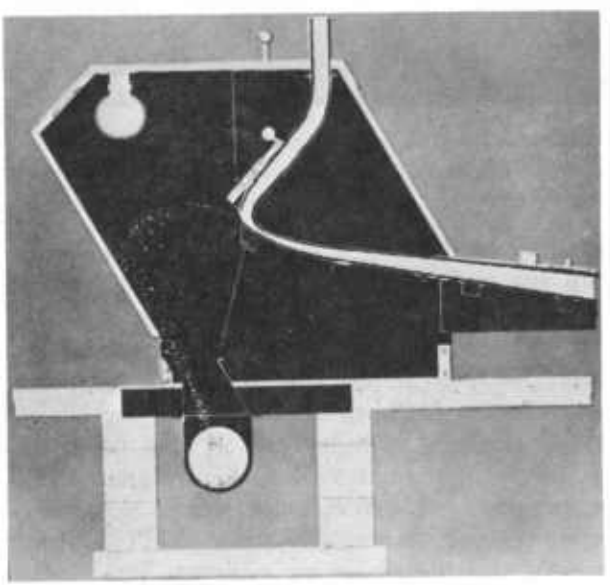

Figure 3–40.—Unit flow-through air lint cleaner, usually located behind the gin stand (Lummus Super-Jet lint cleaner).

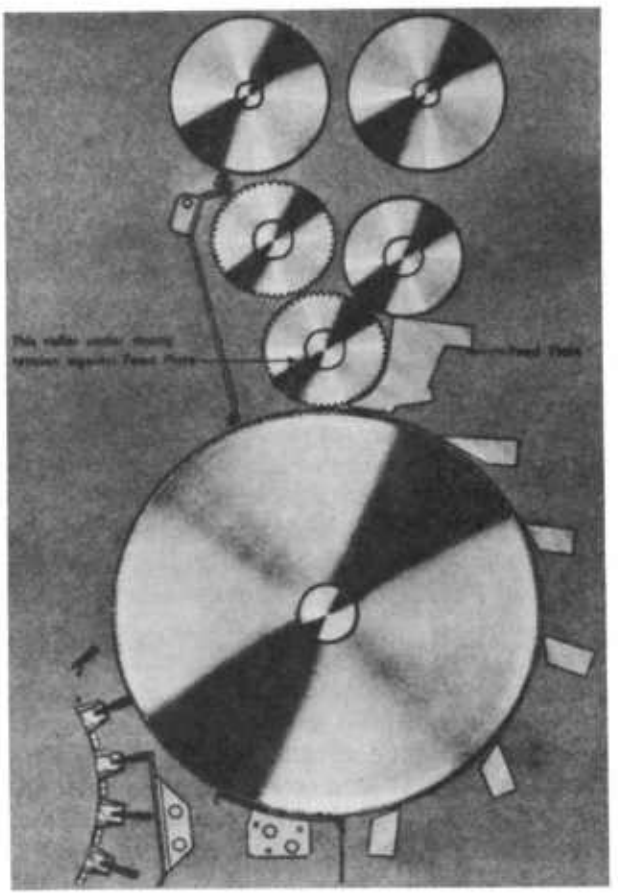

Figure 3–41.—Feed works of a controlled-batt saw lint cleaner (Bush-Hog/Continental Gin Cleanmaster lint cleaner).

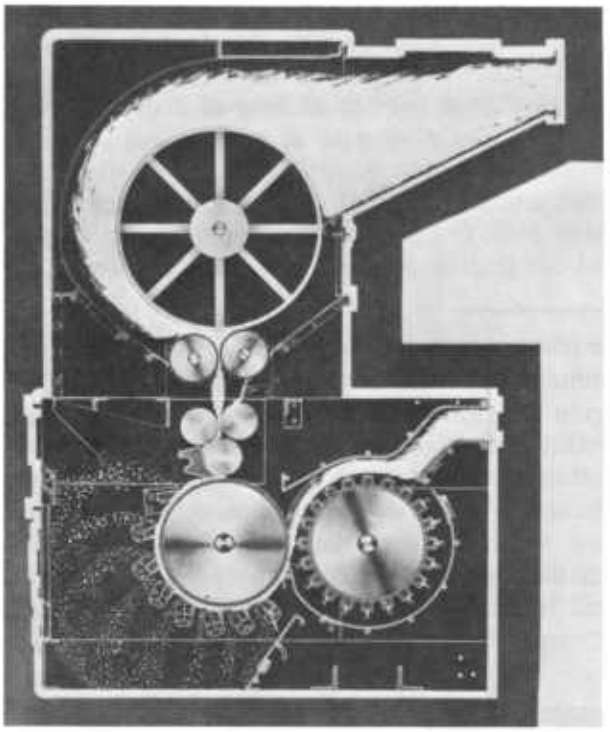

FIGURE 3–42.—Unit controlled-batt saw lint cleaner with brush doffing (Bush-Hog/Continental Gin Sixteen-D lint cleaner).

of trash taken out by the air jet is controlled by opening and closing this cleaning slot (which can be completely closed). Vane-axial fans pull the air and lint to suction condensers, where air and cotton are separated. A critical factor in the operation of air cleaners is that a vacuum of 2 to 2½ inches of water must be maintained in the duct on the discharge side of the cleaner.

Flow-through air lint cleaners are less effective in improving the grade of cotton than saw lint cleaners, but they also remove less weight from the bale. Fiber length and strength are unaffected by the air lint cleaner (Griffin and McCaskill 1957; St. Clair and Roberts 1958).

CONTROLLED-BATT SAW LINT CLEANER

The controlled-batt saw cleaner is now the most common in the ginning industry. Lint from the gin stand or another lint cleaner is formed into a batt on a condenser screen drum. The batt is then fed through one or more sets of compression rollers, passed between a very closely fitted feed roller and feed plate or bar, and fed onto a saw-cylinder (fig. 3–41). Each set of compression rollers rotates slightly faster than the preceding series and produces some

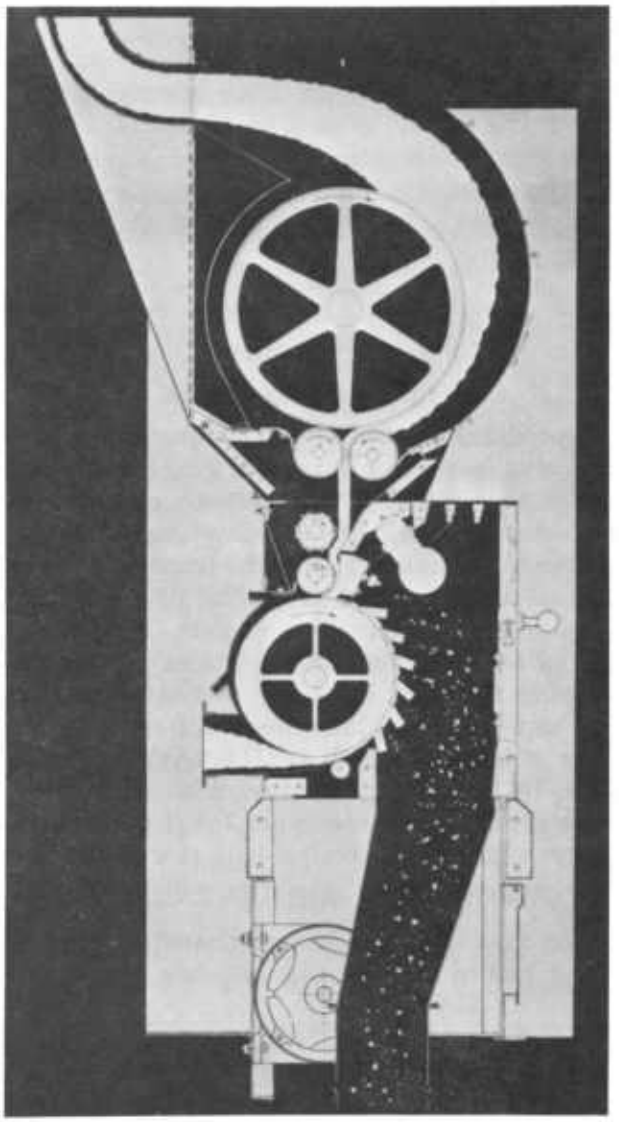

FIGURE 3–43.—Unit controlled-batt saw lint cleaner with air suction doffing (Lummus model 66 or 86 lint cleaner).

thinning of the batt. The feed roller and plate grip the batt so that a combing action takes place as the sawteeth seize the fibers; the feed plate clears the saw by about one-sixteenth inch. The teeth of the saw cylinder convey the fibers to the discharge point. While the fibers are on the saw cylinder, which may be 12 to 17 inches in diameter, they are cleaned by a combination of centrifugal force, scrubbing action between saw cylinder and grid bars, and gravity assisted by an air current. The fibers may be doffed from the sawteeth by a revolving brush, airblast, or air suction (figs. 3–42 and 3–43). When brush doffing, the ratio of the

FIGURE 3–44.—Bulk saw lint cleaner (Bush-Hog/Continental Gin Cleanmaster lint cleaner).

tip speed of the brush to the tip speed of the saw varies from about 1.5:1 to 2:1. The principal features and settings of saw lint cleaners are given in table 3–7, and their recommended installations and power requirements are given in table 3–8.

An important factor in the operation of the cleaner is the condition of the batt as it is fed to the saws. If the batt is thicker on one side than on the other, or if it is too thin or broken, the lint cleaner will not operate properly. Poor batt conditions can also cause chokages and may damage the equipment. A good batt can be obtained only by having the proper air balance between the gin stand, the condenser, the duct fan, and the lint flue. Axial or vane-axial fans, often referred to as clean-air fans, are usually

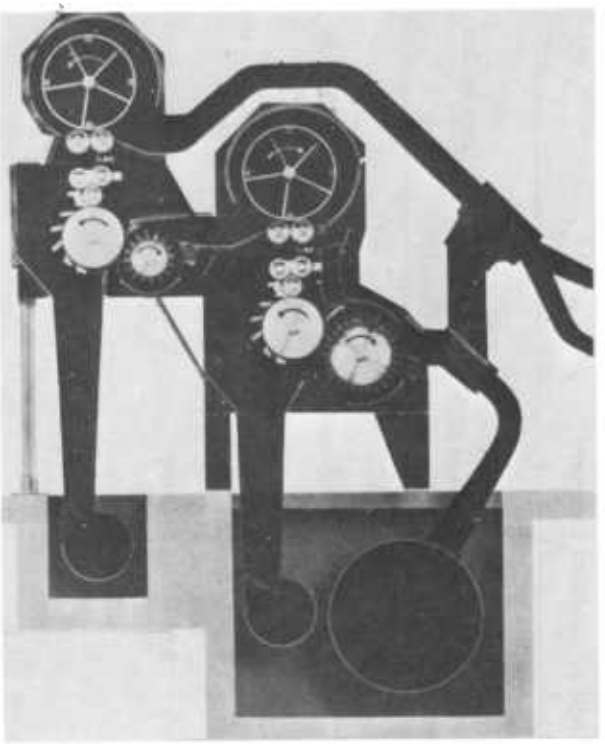

FIGURE 3–45.—Unit saw lint cleaners in series (Hardwicke-Etter Conqueror dual lint cleaner).

used to discharge air from lint cleaner condensers.

COMBING RATIO AND SAW SPEED

In saw lint cleaners the uniformity and thickness of the batt and the manner in which it is delivered to the sawteeth are important factors in the effective operation of the cleaner. These factors are controlled by the manufacturer, but, in some cases, may be modified by the ginner by regulating the combing ratio and saw speed of the lint cleaner. Combing ratio is the ratio of the rim speed of the saws to the rim speed of the spline feed roller.

Increasing the combing ratio and saw speed increases the cleaning efficiency of the cleaner, but can affect the spinning qualities of the cotton. Most lint cleaner installations operate within a combing ratio range of about 16 to 28 at saw-cylinder speeds of 800 to 1,200 revolutions per minute (2,515 to 5,025 feet per minute saw-tip speed) for normal feed rates. The ginner should not attempt to change these settings without first consulting the manufacturer. Higher ratios and saw speeds will

(*Continued on page 41.*)

TABLE 3–7.—*Principal features and settings of saw lint cleaners*

Manufacturer and make	Saw diameter (inches)	Saw speed (r/min)	Grid bars (No.)	Feed-roller diameter (inches)	Settings[1]			Doffing system
					Feed plate to saws (inch)	Feed roller to feed plate	Grid bar to saw (inch)	
Bush-Hog/Continental Gin:								
Sixteen D:								
66-inch	16	800–850	8	$4\frac{7}{16}$	$\frac{1}{16}$	0.020-inch, spring-loaded.	$\frac{1}{16}$	Brush, 17¾-inch diameter.
94-inch	16	866	8	$4\frac{7}{16}$	$\frac{1}{16}$	do	$\frac{1}{16}$	Do.
Model 580	12	700–800	5	2⅝	$\frac{1}{16}$	0.0187-inch	$\frac{1}{16}$	Do.
DFB	16	1,000	8	$4\frac{7}{16}$	$\frac{1}{16}$	Spring-loaded, 150-lb tension.	$\frac{1}{16}$	Do.
Rebel and Commander	14	800–1,000	5	4½	$\frac{1}{16}$	0.010-inch, floating-spring-loaded.	$\frac{1}{32}$ top, $\frac{3}{32}$ heel.	Brush, 18-inch diameter.
Cleanmaster	14	800	5	4½	$\frac{1}{32}$	do	do	Do.
Super Cleanmaster	14	800–1,050	5	4½	$\frac{1}{16}$	do	do	Do.
Constellation	16	800–1,000	5	4½	$\frac{1}{16}$	do	do	Do.
Super Constellation	16	800–1,000	5	4½	$\frac{1}{32}$	do	do	Do.
Revelation / Super Revelation	16	800–1,000	5	4½	$\frac{1}{16}$	do	do	Do.
Lodestar	16	800–1,000	5	4½	$\frac{1}{16}$	do	do	Do.
Hardwicke-Etter Co.:								
Challenger:								
Model 650 / Model 840	13¼	950	5	$4\frac{7}{16}$	$\frac{1}{16}$	Floating-spring-loaded	$\frac{1}{16}$	Brush, 18-inch diameter at 1,540 r/min.
Conqueror:								
Model 650 / Model 840	13¼	950	5	$4\frac{7}{16}$	$\frac{1}{16}$	do	$\frac{1}{16}$	Brush No. 1, 12-inch diameter. Brush No. 2, 18-inch diameter.
Lintmaster	16	1,000–1,500	5	3⅝	$\frac{1}{16}$	Roll fixed bar, 23 sections, spring-loaded.	$\frac{1}{16}$	Air blast, 14- to 16-inch (water gage).
Lummus Industries, Inc.:								
Model 66	16	[2]800–1,200	6	4	$\frac{1}{16}$	0.005-inch, floating-spring-loaded.	$\frac{1}{32}$ top, $\frac{3}{16}$ heel.	Brush, 15-inch diameter; or air suction, 2-inch vacuum (water gage).
Model 86 / Model 108	16	[2]800–1,200	6	5⅜	$\frac{1}{16}$	do	do	Do.
Murray-Carver:								
Combing	12	700–980	8	3	0.050–0.060	$\frac{1}{16}$-inch, carding 0.010, grooved.	0.050–0.075	Brush.

Big 60	14¾	1,000–1,400	4	4½	.050–.060	do	.050–.075	Do.
Big 72	17	880–1,200	4	4½	.050–.060	do	.050–.075	Do.
Big 84	17	880–1,200	4	4½	0.050	do	.050–.075	Do.
Seventeen	17	800	6	4½	.060	0.010-inch	.050–.075	Do.

[1] All makes of machinery have a $\frac{1}{16}$-inch feed-plate-to-saw setting.
[2] A speed of 1,000 r/min is most popular.

TABLE 3–8.—*Power requirements and recommended installation of saw lint cleaners*

Make	Condenser diameter (inches)	Clean-air fan		Horse-power	Recommended installation	Capacity (bales per hour)
		Horsepower	Type and size[1]			
Bush-Hog/Continental Gin:						
Sixteen D:						
66-inch	24	5 per unit	V.A., 26″	15, 20, or 25	Unit behind each gin stand, single and tandem.	4–6.
94-inch	24	10–20	V.A., 26″, 1 or 2 per battery.	25	do	8.
Model 580	20	3 per unit	Prop., 18″	15	Unit	1–2.
DFB	([2])	3		20	Battery units	6–8.
Rebel	40	5	C.A., 36″	20	Battery unit	3–4.
Commander	40	5 or 7½	do	20	Battery unit or tandem, split stream.	6–8.
Cleanmaster	40	5–10	C.A., 36″ or 42″	20	Battery unit or tandem	5.
Super Cleanmaster	40	7½	do	Two 20's	Battery unit or tandem, split stream.	10–12.
Constellation	50	7½–10	C.A., 42″	25	Battery unit or tandem	7–8.
Super Constellation	50	7½–10	C.A., 42″, 2 per battery.	Two 25's	Battery unit or tandem, split stream.	18–20.
Revelation	50	10	C.A., 42″	25	Battery unit, including battery condenser.	7–8.
Super Revelation	50	10	C.A., 42″, 2 per battery.	Two 25's	Battery unit, split stream, including battery condenser.	18–20.
Lodestar	24	10	V.A., 26″	15	Unit behind each gin stand, tandem.	7.
Hardwicke-Etter Co.:						
Challenger:						
Model 650	20	3–15 per battery.	V.A., 28″, 1 to 3 per battery.	7½–10	Unit behind each gin stand, single and tandem.	2½–5.
Model 840	20	10 per unit	V.A., 21″, per unit.	20	do	9–10.

See footnotes at end of table.

TABLE 3–8.—*Power requirements and recommended installation of saw lint cleaners*—Continued

Make	Condenser diameter (inches)	Clean-air fan		Horse-power	Recommended installation	Capacity (bales per hour)
		Horsepower	Type and size[1]			
Hardwicke-Etter Co.:—Continued						
Conqueror:						
Model 650	[3]20	5 each	V.A., 28″, 2 to 5 per battery; 36″, 2 to 5 per battery.	15	Unit behind each gin stand for 2-stage lint cleaner.	2½–5.
Model 840	[3]20	30 for entire unit.	V.A., one 18″ and one 21″.	One 5, one 10	do	8–9.
Lintmaster	30	3	V.A., 28″	25	Battery unit single, tandem, or split stream.	6–8, per unit.
Lummus Industries, Inc.:						
Model 66	24	3–20 as required.	V.A., 18″ per machine; V.A., 24″, per 2 machines.	15	Behind each gin stand, single and tandem, or split system.	4–6 per machine, 2–3 when split.
Model 66	24	do	do	15–20	Battery units, single and split stream.	4–6 per machine.
Model 86	30	5–20 as required.	V.A., 24″, per single or double machine.	25, air; 30, brush; per machine.	Behind each gin stand, single and tandem, or split system.	6–9 per machine, 3–4½ when split.
Model 86	30	do	do	do	Battery units, single and split stream.	6–9 per machine.
Model 108	30	5–25 as required.	V.A., 24″, per machine; V.A., 36″ per 2 machines.	40	Behind each gin stand, single and tandem, or split stream.	8–12 per machine, 4–6 when split.
Model 108	30	do	do	40	Battery units, single and split stream.	8–12 per machine.
Murray-Carver:						
Type F combing lint cleaner	20				Unit behind each stand	2–4.

[1] All fans are axial-flow type. Manufacturer's description is shown (V.A.=vane axial, Prop.=propeller, C.A.=clean-air).
[2] Battery.
[3] Two condensers.

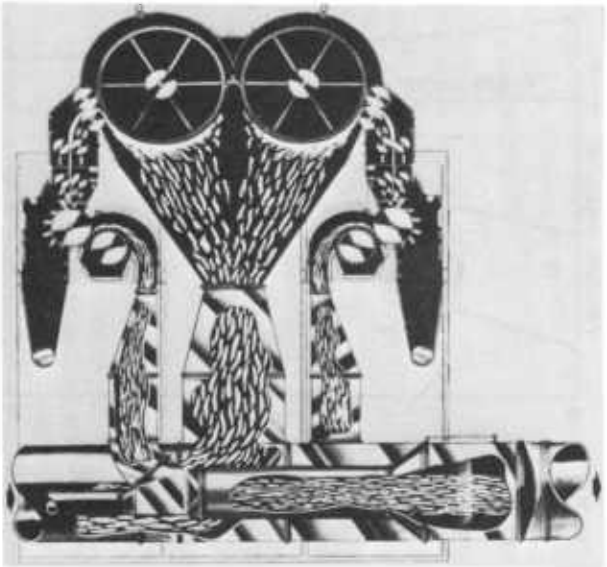

FIGURE 3–46.—Bulk back-to-back, split-stream saw lint cleaners (Bush-Hog/Continental Gin Super-Constellation lint cleaner).

result in high fiber breakage and nep counts, while lower ratios and speeds considerably decrease cleaning efficiency (Mangialardi 1970).

MULTIPLE LINT CLEANING

Lint cleaners are referred to as unit or bulk (battery), depending on whether they process lint from one or more gin stands. The unit cleaner is located behind a gin stand and receives lint only from that stand (figs. 3–40, 3–42, and 3–43). This is always the case for the air lint cleaner. A bulk cleaner receives lint from two or more gin stands (fig. 3–44). Two lint cleaners, either unit or bulk, placed in series so that the same lint passes through both of them results in what is variously called tandem, dual, or double lint cleaning (fig. 3–45).

For high-capacity gin stands, the bulk cleaners are installed back-to-back with a common lint flue (fig. 3–46). In that way the lint from all the gin stands is divided ("split stream") and each saw receives only one-half of the cotton. The number of stages of saw cleaning refers to the number of saws over which the fibers pass.

LINT CLEANER WASTE

The amount of material removed by lint cleaning depends on harvesting practices and

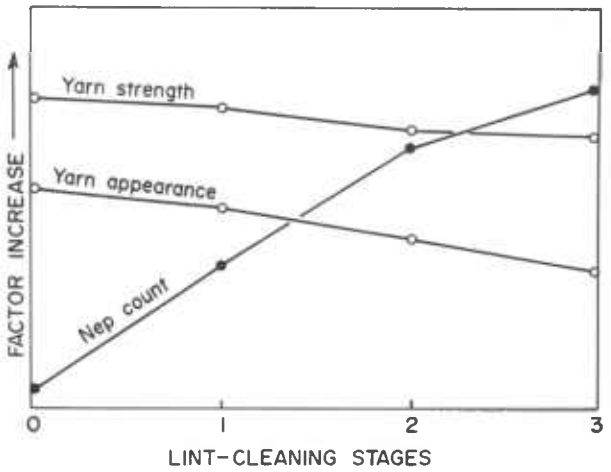

FIGURE 3–47.—Effect of saw lint cleaners on nep count, yarn strength, and appearance.

grades of cotton being ginned. With multiple stages of saw lint cleaners, the first cleaner removes the most weight; the second, about half as much as the first; and the third, about half as much as the second. Typical quantities of waste removed by one, two, and three lint cleaners are 11, 18, and 22 pounds for cotton graded as Strict Low Middling before cleaning; corresponding weights are 19, 25, and 36 pounds for cotton classed as Strict Good Ordinary.

Lint cleaners remove a greater percentage of lint from the cleaner cottons. Nonlint content of the lint-cleaner waste for one, two, and three stages of lint cleaning averages about 75, 70, and 67 percent. This material is composed of motes, leaf particles, grass, bark, and green leaves in varying amounts, depending on the condition of the cotton.

The sale of reclaimed gin waste may provide income for cotton-gin owners. The bedding, automotive, and furniture industries use large quantities of cotton batting composed of about 60 percent linters, and 40 percent cotton waste. If waste materials must be cleaned to make them marketable, and if the premium is less than 1 cent, the weight loss in cleaning should not exceed 20 percent of the original weight (Holder 1967).

COTTON QUALITY

Perhaps the best index to cotton quality is the performance of the fibers during spinning at the mill. Increasing the number of saw lint cleaners at the gin decreases the manufacturing

waste during spinning, but often has the adverse effect of increasing neps in the card web and lowering the yarn strength and appearance (fig. 3–47). A decline in appearance is greater for the finer carded yarns. From a spinning standpoint, the use of more than two saw lint cleaners in series is discouraged.

BALE VALUE

Lint cleaning generally improves the grade classification of the lint. As the number of lint cleaners increases, grade tends to increase. However, each succeeding cleaner gives less grade improvement than the preceding one. In addition, lint cleaners blend Light-Spotted cottons so they pass into the White grades and decrease the number of bales which are reduced in grade because of the grass and bark content.

But when grades are improved, bale weights are reduced and staple length may decrease; and these opposing factors affect bale value (fig. 3–48). In some cases the offsetting losses cause the bale value to be reduced by lint cleaning.

When price spreads between grades are small, the grower can obtain maximum bale value most often by using one saw lint cleaner on early-season clean cottons and two stages of lint cleaning on late-season, more trashy, or Light-Spotted cottons. It is recommended that no lint cleaning be used on cottons graded as high as Middling White. Application of these recommendations would depend on the ability of the ginner to evaluate the type of cotton he is processing.

OPERATION AND MAINTENANCE

The ginner and crew must know their machines—how they work and the required operating settings and speeds. For best performance and service, the recommendations of the manufacturer as provided in service manuals and parts catalogs should be carefully followed. These provide maintenance procedures and trouble-shooting guides, close adherence to which will minimize the time required to keep machines in normal operation. When in doubt regarding appropriate action, contact the manufacturer's nearest office.

Maintenance of the condenser will require occasional replacement of the rubber flashing around the drum and across doffing rollers. The feed roller rubber flashing will wear and

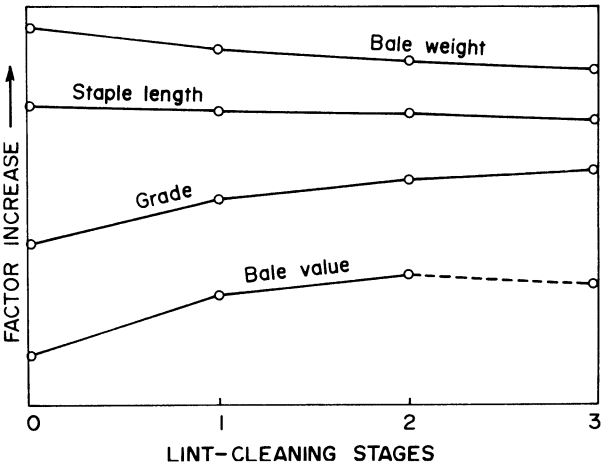

FIGURE 3–48.—Effect of lint cleaners on classer's lint grade and staple length, and bale weight and value.

should be replaced to prevent air leakage at this point.

Maintain normal operating tension for V-belts and chain drives. Do not forget the hidden V-belt drive to the vane-axial fan in the condenser dust flue. When replacing badly worn chains, it is good policy also to replace sprockets on which they operate because their worn teeth will not mate well with the new chain. Test regularly for loosened set screws, bolts, and jam nuts. Before tightening any bolt responsible for holding a clearance, gage and set the clearance to comply with recommended dimensions.

Most ball bearings are the sealed type and are packed with high-temperature grease; they should need no further lubrication for the life of the bearing.

To start the lint-cleaning system, first turn on the trash fan. Be sure the lint cleaner and the condenser mounted on the lint cleaner are in operation before energizing the vane-axial fan in the receiving condenser dust flue. Shutdown of the lint-cleaning system should be in reverse order, first stopping the flow of cotton through the machinery. Always keep safety guards and doors closed and fastened during operation.

The sequence of the emergency stopping procedure depends entirely on the position of the operator. If he is nearer the machine than the control console, the belt release should be pulled before the "stop" button is pushed.

Any obstruction that will tag cotton should be removed or smoothed. In flow-through air

cleaner installations, inspect each day for tags in the lint flue between gin stand and lint cleaner. Periodic inspection of saw cylinders is urged. Should trash become embedded between teeth, remove it with a stiff brush (but only when the machine is completely stopped). Vane-axial fans should be kept free of lint tags, which reduce fan efficiency and can cause friction fires.

Following a regular service schedule based on manufacturer's recommendations will enable the ginner to keep his lint cleaner operating efficiently with minimum overall maintenance.

REFERENCES

Griffin, A. C., and McCaskill, O. L. 1957. Tandem lint cleaning-air-saw cylinder combination. The Cotton Gin and Oil Mill Press, March 23, 1957, pp. 25, 52–53.

Holder, S. H., Jr. 1967. Supply and price data on cotton gin motes. U.S. Dep. Agric. Mark. Res. Rep. 809, 24 pp.

Looney, Z. M., LaPlue, L. D., Wilmot, C. A., and others. 1963. Multiple lint cleaning at cotton gins: effects on bale value, fiber properties, and spinning performance. U.S. Dep. Agric. Mark. Res. Rep. 601, 53 pp.

Mangialardi, G. J., Jr. 1970. Saw-cylinder lint cleaning at cotton gins: effects of saw speed and combing ratio on lint quality. U.S. Dep. Agric. Tech. Bull. 1418, 73 pp.

———. 1972. Multiple lint-cotton cleaning: its effect on bale value, fiber quality, and waste composition. U.S. Dep. Agric. Tech. Bull. 1456, 69 pp.

St. Clair, J. S., and Roberts, A. L. 1958. Effects of lint cleaning of cotton: an economic analysis at California gins. U.S. Dep. Agric. Mark. Res. Rep. 238, 37 pp.

Stedronsky, V. L. 1964. Lint cleaning. U.S. Dep. Agric. Agric. Handb. 260, pp. 32–45.

U.S. Agricultural Marketing Service. 1972. Cotton gin equipment 1972, 16 pp.

Packaging of Lint Cotton

By Oliver L. McCaskill and W. Stanley Anthony

Packaging is the final step in the processing of lint cotton at the gin. The packaging system consists of a lint condenser, lint slide, lint feeder, tramper, bale press, and a strapping subsystem. The bale press consists of a frame, one or more rams, and a hydraulic system. The strapping subsystem may be entirely manual, semiautomated, or fully automated.

Bale presses are described primarily by the density of the bale that they produce, such as low, standard, or universal. There are other descriptions, such as up-packing, down-packing, fixed-box (fig. 3–49), and doorless presses (fig. 3–50). Regardless of description, they all accomplish the same thing—packaging lint cotton so that it can be handled in the channels of trade.

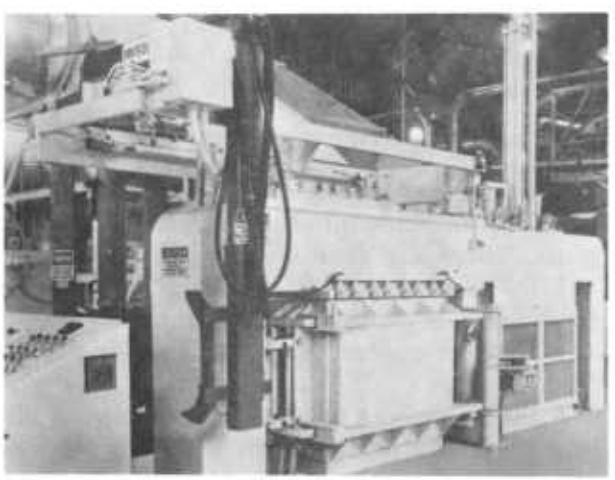

PN-5235

Figure 3–49.—Fixed-box press with automatic strapping.

BATTERY CONDENSER

Condensers employ a slow-turning, screened drum on which the ginned lint forms into a batt. The batt is discharged between doffing rollers to the lint slide. Conveying air passes through the screen on the drum and is usually discharged out one end of the drum through an air duct and into the atmosphere.

Most condensers employ a suction fan in the air discharge line to overcome the static pressure loss in the system. This also makes it

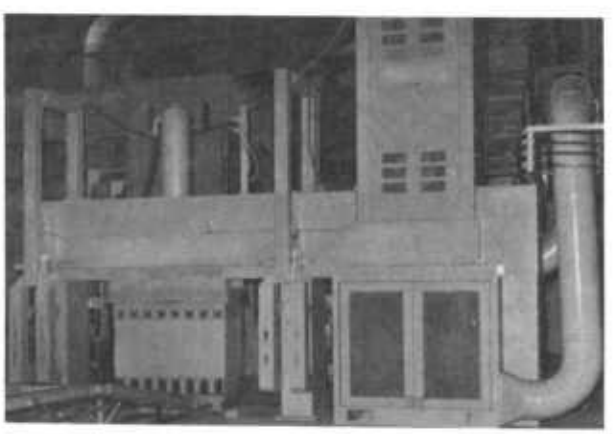

PN-5236

Figure 3–50.—Doorless press with automatic strapping.

possible to handle more lint with a smaller condenser and lint flue system.

The speed of the condenser drum should be adjusted to the capacity of the gin so that a smooth, solid batt is formed. If the drum runs too fast, breaks will occur in the batt; if too slow, the batt will be too thick, causing high static pressure loss and possible chokage. The recommended condenser drum speed is 6 to 15 revolutions per minute.

Uneven formation of the batt in the condenser is one of the primary causes of big-ended bales (Watson and Stedronsky 1943). Big-ended bales are formed when more lint is deposited at one end of the press box than at the other. During the pressing operation, the increased density or weight at one end of the bale forces the follow block into an inclined position, thus forming wedge-shaped bales (fig. 3–51). Press hands may leave slack ties on the light end of the bale, which prevents the uneven weight from being apparent when the bale is released from the press.

Some bales appear to be big-ended, although they are not. For instance, a hydraulic ram can slip after the bale is pressed and while the ties are being applied. Between the time the first and last ties are applied, the bale becomes larger at one end than at the other. The dangers of tramper breakage and press distortion are great with uneven bales. A ginner cannot afford to risk a broken ram or sprung center column, particularly when uneven packing can be eliminated.

The manner in which the lint is deposited on the condenser drum can cause a big-ended bale. Lint cotton is conveyed to the condenser from the gin stands or lint cleaners by a continuous air current. Any deviation in the airflow to the condenser will automatically disrupt the flow of the lint cotton. Lint flues that are bent and battered can sometimes affect the flow of air so that lint will not travel through them uniformly.

Sheet-metal deflectors are used in lint flues to provide uniform distribution of the lint on the condenser drum to prevent or correct big-ended bales. Foreign matter such as tags, rivet heads, rust, or protrusions can often cause deflection of the air current, resulting in uneven batts on the screen of the condenser.

Condensers in poor operating condition, flashings in bad condition, and nonuniform drum resistance may cause more cotton and air to be deflected to one end of the drum and thus produce big-ended bales. Daily inspection of the condenser and its vent pipes is a good preventive measure and will reduce the number of big-ended bales.

Battery condensers that discharge the conveying air from only one side are sensitive to the volume of airflow. Excess airflow will cause the batt to form on the drum nearest the air discharge and cause a big-ended bale. This problem can usually be corrected by reducing the air volume; however, installation of a larger condenser may be necessary. Use of a double manifold condenser, similar to a lint cleaner condenser, would be another way to correct the problem of big-ended bales and, at the same time, produce a more uniform batt of cotton for the press.

LINT SLIDES

The lint slide is a sheet metal trough (approximately 54 inches wide) which connects the battery condenser to the lint feeder on the tramper. It is installed on an angle of 40° to 45° to insure movement of the lint. The length of the lint slide is based on the capacity of the ginning system and the time required to turn the press between bales. The following is a general guide for selecting lint slide lengths based on ginning capacity:

Maximum ginning capacity (bales/hour)	*Lint slide length (feet)*
6	10
12	12
18	14
24	16
30	18

LINT FEEDER

The lint feeder is a device for moving lint from the lint slide into the charging box of the press. There are four basic types of feeders: (1) the revolving paddle kicker, (2) the belt feed used in conjunction with the kicker, (3) the lint pusher, and (4) the air-suction feed.

All these devices are intended to deposit lint into the charging box with a fast but gentle action, without agitating, turning, rolling, tumbling, tearing, or otherwise breaking up the batt as it is received from the condenser.

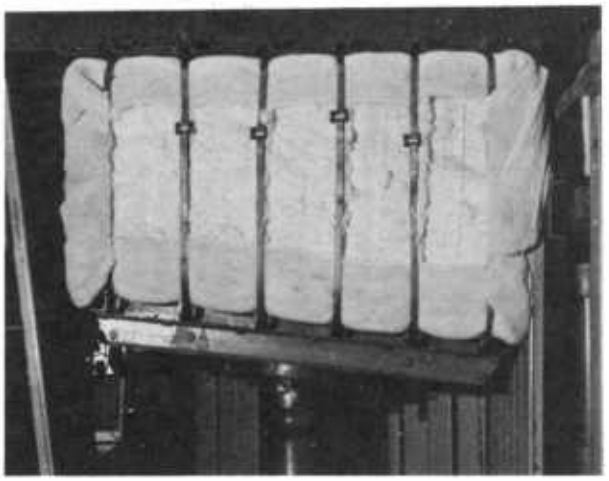

PN-5237

FIGURE 3–51.—Big-ended or heavy-ended bale in a gin press.

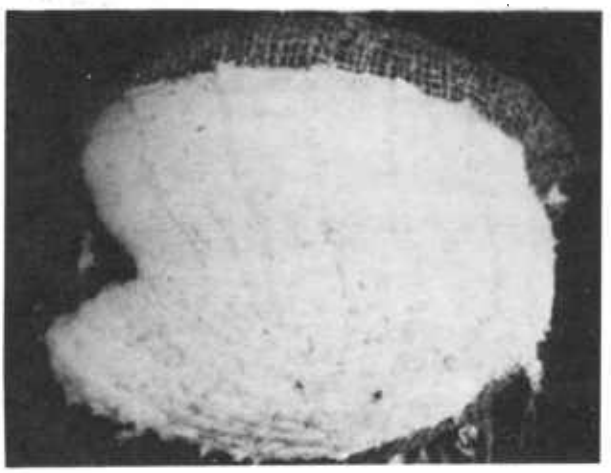

PN-5238

FIGURE 3–52.—End view of rolling bale.

A smoother lint sample will result if this can be accomplished.

Rolling bales are caused primarily by faulty action of the kicker device (Watson and Stedronsky 1943). Proper adjustment of the kicker speed and synchronization with the tramper is necessary to achieve good results. The speed or rate of sweep is the principal factor affecting the front-to-rear distribution of lint in the press box. If the discharge is too strong, more lint will be deposited in the front of the box than in the rear. The reverse is true if the discharge is too weak. Variations in tramper speed seem to have little effect on uniformity of bale layering. However, if the kicker is driven from the tramper, a change in tramper speed will affect unevenly packed bales because of the change in kicker speed. Figure 3–52 shows an end view of a rolling bale.

Sometimes rolling bales are produced when the lint slide is too short or has too much slope. The lint slide shape can be adjusted to prevent rolling bales. The ginner, however, is still responsible for making reasonable efforts to have cotton delivered in an even flow into the gin press box.

TRAMPER

The purpose of the tramper is to pack the lint into the press box, thus putting it under light compression. A good tramper combines ruggedness with simplicity. It must be regulated to permit clearing the lint slide between strokes. A kicker device deposits lint in the press box between strokes of the tramper. The speed of the kicker is related to the time the tramper is up, allowing cotton to be "kicked" into the top of the press box.

Trampers are available in different types, such as mechanical double-chain and hydraulic. Regardless of type, care should be taken to prevent contamination of lint beneath the tramper by lubricants or hydraulic fluid that might drip from the tramper mechanism. Motors of 10 to 15 horsepower, equipped with a fail-safe brake, are usually required for trampers.

Approximately 10 tramper strokes per minute is a rate recommended for high-capacity gins (12 to 15 bales per hour). For gins of smaller capacity, the tramper speed should be reduced proportionately. The tramper stroke rate is governed by the ginning rate for a particular gin. To determine the number, observe the cotton in the lint slide between strokes. If the lint feeder cleans the slide for each stroke, the number of strokes is correct. However, if the storage space is filled between the kicker and the front gate and the kicker is carrying cotton around between strokes after the space under the tramper block is filled, add another stroke to the tramper by changing the ratio of the tramper driving and driven pulleys.

BALE PRESS

There are four types of gin presses that produce bales of different sizes and densities—flat, modified flat, gin standard, and gin uni-

TABLE 3–9.—*Types and dimensions of the four most common bales produced at cotton gins*

Bale type	Bale dimensions (inches)		
	Length	Width[1]	Thickness[1]
Flat	55	28	36–48
Modified flat	55	25	36–48
Gin standard	55	20–21	30–36
Gin universal	55	20–21	26–30

[1] Measured at the bale tie.

TABLE 3–10.—*Typical densities of bales from a flat-bale press*[1]

Bale dimensions[2] (inches)	Volume (ft^3)	Density (lb/ft^3) at bale weight of—					
		460 lb	480 lb	500 lb	520 lb	540 lb	560 lb
55×28×36	32.1	14.3	15.0	15.6	16.2	16.8	17.5
55×28×37	33.0	14.0	14.6	15.2	15.8	16.4	17.0
55×28×38	33.9	13.6	14.2	14.8	15.4	15.9	16.5
55×28×39	34.8	13.2	13.8	14.4	15.0	15.5	16.1
55×28×40	35.6	12.9	13.5	14.0	14.6	15.1	15.7
55×28×41	36.5	12.6	13.1	13.7	14.2	14.8	15.3
55×28×42	37.4	12.3	12.8	13.4	13.9	14.4	15.0
55×28×43	38.3	12.0	12.5	13.0	13.6	14.1	14.6
55×28×44	39.2	11.7	12.2	12.8	13.3	13.8	14.3
55×28×45	40.1	11.5	12.0	12.5	13.0	13.5	14.0
55×28×46	41.0	11.2	11.7	12.2	12.7	13.2	13.7
55×28×47	41.9	11.0	11.5	11.9	12.4	12.9	13.4
55×28×48	42.8	10.8	11.2	11.7	12.2	12.6	13.1

[1] Press box area: 54″×27″=1,458 in^2.
[2] Width and thickness measured at the bale tie.

TABLE 3–11.—*Typical densities of bales from a modified flat-bale press*[1]

Bale dimensions[2] (inch)	Volume (ft^3)	Density (lb/ft^3) at bale weight of—					
		460 lb	480 lb	500 lb	520 lb	540 lb	560 lb
55×25×36	28.6	16.1	16.8	17.5	18.2	18.9	19.1
55×25×37	29.4	15.6	16.3	17.0	17.7	18.3	19.0
55×25×38	30.2	15.2	15.9	16.5	17.2	17.9	18.5
55×25×39	31.0	14.8	15.5	16.1	16.8	17.4	18.0
55×25×40	31.8	14.5	15.1	15.7	16.3	17.0	17.6
55×25×41	32.6	14.1	14.7	15.3	15.9	16.6	17.2
55×25×42	33.4	13.8	14.4	15.0	15.6	16.2	16.8
55×25×43	34.2	13.4	14.0	14.6	15.2	15.8	16.4
55×25×44	35.0	13.1	13.7	14.3	14.9	15.4	16.0
55×25×45	35.8	12.8	13.4	14.0	14.5	15.1	15.6
55×25×46	36.6	12.6	13.1	13.7	14.2	14.8	15.3
55×25×47	37.4	12.3	12.8	13.4	13.9	14.4	15.0
55×25×48	38.2	12.0	12.6	13.1	13.6	14.1	14.7

[1] Press box area: 54″×24″=1,296 in^2.
[2] Width and thickness measured at the bale tie.

TABLE 3–12.—*Typical densities of bales from standard- and universal-density presses*[1]

Bale dimensions[2] (inches)	Volume (ft^3)	Density (lb/ft^3) at bale weight of—					
		460 lb	480 lb	500 lb	520 lb	540 lb	560 lb
55×20×25	15.9	28.9	30.2	31.4	32.7	33.9	35.2
[3]55×20×26	16.6	27.8	29.0	30.2	31.4	32.6	33.8
[3]55×20×27	17.2	26.8	27.9	29.1	30.3	31.4	32.5
[3]55×20×28	17.8	25.8	26.9	28.1	29.2	30.3	31.4
55×20×29	18.5	24.9	26.0	27.1	28.2	29.3	30.3
[4]55×20×30	19.1	24.1	25.1	26.2	27.2	28.3	29.3
[4]55×20×31	19.7	23.3	24.3	25.3	26.4	27.4	28.4
[4]55×20×32	20.4	22.6	23.6	24.5	25.5	26.5	27.5
55×20×33	21.0	21.9	22.8	23.8	24.8	25.7	26.7
55×20×34	21.6	21.3	22.2	23.1	24.0	24.9	25.9
55×20×35	22.3	20.6	21.5	22.4	23.3	24.2	25.1
55×20×36	22.9	20.1	20.9	21.8	22.7	23.6	24.4
55×21×25	16.7	27.5	28.7	29.9	31.1	32.3	33.5
[3]55×21×26	17.4	26.5	27.6	28.8	29.9	31.1	32.2
[3]55×21×27	18.0	25.5	26.6	27.7	28.8	29.9	31.0
[3]55×21×28	18.7	24.6	25.6	26.7	27.8	28.9	29.9
55×21×29	19.4	23.7	24.8	25.8	26.8	27.9	28.9
[4]55×21×30	20.1	22.9	23.9	24.9	25.9	26.9	27.9
[4]55×21×31	20.7	22.2	23.2	24.1	25.1	26.1	27.0
[4]55×21×32	21.4	21.5	22.4	23.4	24.3	25.2	26.2
55×21×33	22.1	20.9	21.8	22.7	23.6	24.5	25.4
55×21×34	22.7	20.2	21.1	22.0	22.9	23.8	24.6
55×21×35	23.4	19.7	20.5	21.4	22.2	23.1	23.9
55×21×36	24.1	19.1	19.9	20.8	21.6	22.4	23.3

[1] Press box area: 54 in × 20 in = 1,080 in^2.
[2] Width and thickness at the bale tie.
[3] Suggested universal-density bale size.
[4] Suggested standard-density bale size.

versal (table 3–9). The theoretical densities in bales produced by these presses are shown in tables 3–10, 3–11, and 3–12.

Flat-bale presses are being phased out in favor of modified flat-bale presses so that a universal bale (55 by 25 by 21 inches) can be made at the compress without applying side pressure to the bale. A flat-bale press (27 by 54 inches) can be easily converted to a modified flat press (24 by 54 inches) (National Cotton Council 1972).

Steps in modifying a flat-bale press are as follows:

1. The 3-inch reduction in box width can be obtained by bolting finished 2-inch by 6- or 8-inch lumber to the inside walls. Use C-grade kiln-dried pine or clear-grade oak with a finished thickness of 1½ inches. Check dimensions for dog spacing and press box construction in order to purchase lumber most economically.

2. Bolt each board to side walls with two cadmium-plated, ⅜-inch carriage bolts near both ends of each board. Notch board to allow clearance for dogs. Extend dog slots downward if necessary to clear the extended dogs (fig. 3–53).

3. Lengthen dogs 1½ inches to maintain original penetration into the box by welding

PN-5239

FIGURE 3–53.—Modified flat-bale press box.

metal of the same thickness to end of dogs and grinding smooth.

4. Reduce both follow blocks 3 inches in width by cutting 1½ inches off each end of cross channels. Re-cover channel ends with metal to keep bale strap guides intact, and reduce bagging retainer loops on the platen by 1½ inches on each side (fig. 3–54).

5. Reduce tramper box by 3 inches. Where possible, cut tramper platen width 1½ inches on each side. In some models, the full 3 inches may have to be removed from the front side of the platen and the whole tramper moved 1½ inches forward in order to stay on center with the press box. Make a thorough study of your particular press to see exactly what pieces will have to be cut or moved to maintain proper clearances.

Existing hydraulic and mechanical press equipment should have sufficient strength if the bales are tied out 3 to 5 inches thicker. If there is any doubt that any part of the tramper or press should be strengthened structurally or horsepower increased, it is suggested that the original manufacturer of the units be consulted. This is especially important on some models of down-packing presses with short boxes.

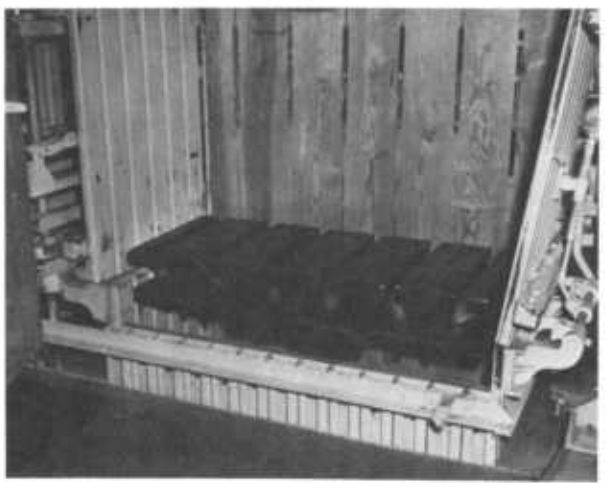

PN-5240

FIGURE 3–54.—Modified flat-bale press follow block.

TABLE 3–13.—*Densities produced by pressing in flat-bale presses*[1]

Platen separation (inches)	Density in press (lb/ft³) at bale weight of—					
	460 lb	480 lb	500 lb	520 lb	540 lb	560 lb
26	21.0	21.9	22.8	23.7	24.6	25.5
27	20.2	21.1	21.9	22.8	23.7	24.6
28	19.5	20.3	21.2	22.0	22.9	23.7
29	18.8	19.6	20.4	21.3	22.1	22.9
30	18.2	19.0	19.8	20.5	21.3	22.1
31	17.6	18.4	19.1	19.9	20.6	21.4
32	17.0	17.8	18.5	19.3	20.6	20.7
33	16.5	17.2	18.0	18.7	19.4	20.1
34	16.0	16.7	17.4	18.1	18.8	19.5
35	15.6	16.3	16.9	17.6	18.3	19.0
36	15.1	15.8	16.5	17.1	17.8	18.4
37	14.7	15.4	16.0	16.7	17.3	17.9
38	14.3	15.0	15.6	16.2	16.8	17.5

[1] Press box area of 1,458 in².

TABLE 3–14.—*Densities produced by pressing in a modified flat-bale press*[1]

Platen separation (inches)	Density in press (lb/ft³) at bale weight of—					
	460 lb	480 lb	500 lb	520 lb	540 lb	560 lb
26	23.6	24.6	25.6	26.7	27.7	28.7
27	22.7	23.7	24.7	25.7	26.7	27.7
28	21.9	22.9	23.8	24.8	25.7	26.7
29	21.1	22.1	23.0	23.9	24.8	25.7
30	20.4	21.3	22.2	23.1	24.0	24.9
31	19.8	20.6	21.5	22.4	23.2	24.1
32	19.2	20.0	20.8	21.7	22.5	23.3
33	18.6	19.4	20.2	21.0	21.8	22.6
34	18.0	18.8	19.6	20.4	21.2	22.0
35	17.5	18.3	19.0	19.8	20.6	21.3
36	17.0	17.8	18.5	19.3	20.0	20.7
37	16.6	17.3	18.0	18.7	19.5	20.2
38	16.1	16.8	17.5	18.2	18.9	19.6

[1] Press box area of 1,296 in².

TABLE 3–15.—*Densities produced by pressing in standard- and universal-density presses*[1]

Platen separation (inches)	Density in press (lb/ft³) at bale weight of—					
	460 lb	480 lb	500 lb	520 lb	540 lb	560 lb
17	43.3	45.2	47.1	48.9	50.8	52.7
18	40.9	42.7	44.4	46.2	48.0	49.8
19	38.7	40.4	42.1	43.8	45.5	47.2
20	36.8	38.4	40.0	41.6	43.2	44.8
21	35.0	36.6	38.1	39.6	41.1	42.7
22	33.5	34.9	36.4	37.8	39.3	40.7
23	32.0	33.4	34.8	36.2	37.6	39.0
24	30.7	32.0	33.3	34.7	36.0	37.3
25	29.4	30.7	32.0	33.3	34.6	35.8
26	28.3	29.5	30.8	32.0	33.2	34.5
27	27.3	28.4	29.6	30.8	32.0	33.2
28	26.3	27.4	28.6	29.7	30.9	32.0

[1] Press box area of 1,080 in².

The long-range goal is to have only two types of bales produced at the gin—gin universal and modified flat, which is recompressed at the compress to universal density.

HYDRAULICS

The hydraulic requirement to press lint cotton depends on the moisture content of the lint and the density to which it is to be pressed (Anthony and McCaskill 1973). Typical densities encountered when pressing flat, modified flat, and standard or universal bales are shown in tables 3–13, 3–14, and 3–15, respectively.

The force required to compress lint cotton to given densities at various moisture contents may be predicted from the equation

$$\log F = 2.0929 - 0.0313M + 2.4469 \log_{10} \rho,$$

where F=compressive force, pounds,
M=lint moisture content (wet basis), percent,
and ρ=density, pound per cubic foot.

The results of evaluating the prediction equation are shown in figure 3–55 for a density range of 10 to 45 pounds per cubic foot and lint moisture content of 3, 6, and 9 percent. Extrapolation beyond these values cannot be supported by research data at this time.

The theoretical force available from selected single-acting hydraulic cylinders is shown in table 3–16. The hydraulic requirement can be determined from these tables for almost any bale press.

EXAMPLE: Determine the diameter of ram and hydraulic requirement to compress 500 pounds of lint at 3-percent moisture content in a modified flat press to a platen separation of 37 inches in 25 seconds. Assume a ram travel of 7 feet and hydraulic pressure not to exceed 2,800 pounds per square inch gage.

SOLUTION: Table 3–14 indicates that a density of 18.0 pounds per cubic foot would result in a modified flat press box at a platen separation of 37 inches for a 500-pound bale. Figure 3–55 indicates that lint cotton at 3-percent moisture would require approximately 120,000 pounds of force for compression to 18.0 pounds per

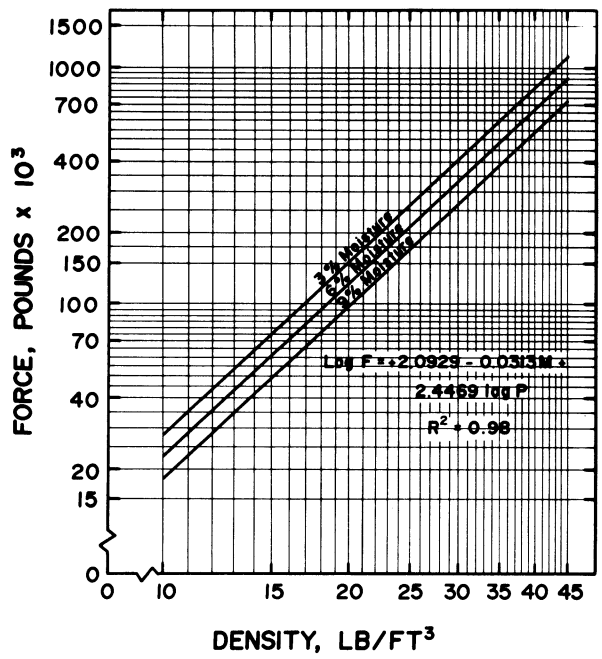

FIGURE 3–55.—Predicted force to compress lint cotton to give densities at three moisture contents.

TABLE 3–16.—*The theoretical force available from selected single-acting hydraulic cylinders*

Cylinder diameter (inches)	Oil requirement per foot of stroke (gal)	Theoretical force (lb) at hydraulic pressure of—							
		1,500 lb/in²g	2,000 lb/in²g	2,500 lb/in²g	3,000 lb/in²g	3,500 lb/in²g	4,000 lb/in²g	4,500 lb/in²g	5,000 lb/in²g
8⅜	2.9	82,633	110,177	137,721	165,265	192,809	220,353	247,897	275,442
9	3.3	95,426	127,235	159,043	190,852	222,660	254,469	286,278	318,086
10	4.1	117,810	157,080	196,350	235,619	274,890	314,159	353,429	392,699
11	4.9	142,550	190,066	237,583	285,100	332,616	380,133	427,649	475,166
12	5.9	169,646	226,195	282,743	339,292	395,841	452,389	508,938	565,487
13	6.9	199,095	265,460	331,825	398,190	464,555	530,920	597,285	663,650
14	8.0	230,907	307,876	384,845	461,814	538,783	615,752	692,721	769,690
15	9.2	265,072	353,429	441,787	530,144	618,501	706,858	795,216	883,573
16	10.4	301,593	402,124	502,655	603,186	703,717	804,248	904,779	1,005,310
17	11.8	340,470	453,960	567,450	680,940	794,430	907,920	1,021,410	1,134,900
17⅜	12.3	355,657	474,209	592,761	711,313	829,865	948,417	1,066,970	1,185,522

cubic foot density. From table 3–16 we find that an 8⅜-inch-diameter ram will develop 137,721 pounds of theoretical force at 2,500 pounds per square inch gage. Also from table 3–16 we find that an 8⅜-inch-diameter ram would require 2.9 gallons of oil per foot of stroke. The quantity of oil required per 7-foot stroke would be $2.9 \times 7 = 20.3$ gallons. The hydraulic pump requirement can be determined by multiplying the oil required per stroke by the time in minutes—$20.3 \times (60/25) = 48.7$ gallons per minute; therefore, a 49-gallon-per-minute pump would be required to raise the ram in 25 seconds.

Another approach to determine the hydraulic capability for packaging lint cotton is to pick a ram size and determine the bale size that can be produced in a specific type of press. For multiple-ram presses, multiply the theoretical force and oil requirements in table 3–16 by the number of rams.

EXAMPLE: Determine the capability of a universal-bale press having two 14-inch-diameter rams with a 7½-foot stroke required to obtain a 20-inch platen separation, and a 360-gallon-per-minute hydraulic system that is set to unload at 3,500 pounds per square inch gage.

SOLUTION: From table 3–16 we find that two 14-inch-diameter rams will deliver 1,077,566 pounds of force at 3,500 pounds per square inch gage. From figure 3–55 we find that lint cotton at 3-percent lint moisture can be compressed to a density of 45 pounds per cubic foot with that force. Referring now to table 3–15 we can determine the capabilities of the press. This press is capable of pressing a 560-pound bale to a platen separation of 20 inches. The time required for ram travel can be determined by multiplying the quantity of oil required per foot of stroke (from table 3–16) by the length of stroke and dividing by the pump capacity.

$$\frac{(2)\ (8\ \text{gal/ft})\ (7.5\ \text{ft})}{360\ \text{gal/min}}$$

$$= 0.33\ \text{min or}\ (0.33)\ (60) = 20\ \text{seconds}$$

The final bale size, after it is released from the press, will depend upon the bale-restraining material.

Hydraulic systems should be designed to meet the most adverse conditions anticipated, which would be the heaviest bale at the lowest moisture content and packaged at the smallest size desired.

BALE TIES

After the bale is compressed to a given density, bale ties are applied around the circumference of the bale to restrain the lint cotton within certain dimensions. Bale ties are normally flat metal bands, either hot- or cold-rolled steel, or wire, and are placed at intervals along the length of the bale. Usually, six, eight or nine ties per bale are used. The resilient force of the lint cotton produces a resulting force on the bale ties, which is a function of the density to which the bale is compressed before it is released from the press, the density at which it is restrained after it is released from the press, and the moisture content of the lint cotton.

The difficulties encountered in calculating the true densities involved in packaging lint cotton necessitate the use of more easily obtainable variables. The factor "density compressed to" can be replaced by using the platen separa-

TABLE 3–17.—*Approximate bale circumferences for bales packaged in gin presses*[1]

Press box dimensions[2] (inches)	Bale width (inches)	Bale thickness (inches)	Tie length (inches)
27×54	28	36	110.0
	28	38	114.0
	28	40	118.0
	28	42	122.0
	28	44	126.0
	28	46	130.0
	28	48	134.0
24×54	25	36	107.0
	25	38	111.0
	25	40	115.0
	25	42	19.0
	25	44	123.0
	25	46	127.0
	25	48	131.0
20×54	21	26	84.0
	21	28	88.0
	21	30	92.0
	21	32	96.0
	21	34	100.0
	20	26	82.5
	20	28	86.5
	20	30	90.5
	20	32	94.5
	20	34	98.5

[1] Length and thickness measurements were made at the ties.

[2] Dimensions are approximate.

tion to which the bale is compressed, the quantity of cotton in the bale, and the cross-sectional area of the press. For a given bale weight in a particular press, the platen separation alone may be used. The factor "density restrained at" may be replaced by the quantity of cotton in the bale, the bale cross-sectional area, and the bale circumference. For a given bale weight produced in a particular press, the bale circumference alone can be used.

Typical bale circumference for gin-packaging systems are given in table 3–17.

Experimental work at the U.S. Cotton Ginning Research Laboratory at Stoneville, Miss., has related the bale tie force to the final platen separation pressed to, the bale circumference (measured at the tie), and the lint moisture content. The force on the ties has been found to be different for each of the six to nine ties. The bale tie with the highest force exerted on it has been found to represent 15 to 20 percent of the total force exerted on all the ties of a bale. The bale tie force distribution for one gin universal bale press is shown in figure 3–56.

The force per tie has been found to range from less than 100 to more than 4,000 pounds. Flat and modified flat bales are normally packaged with six steel bands having a tensile strength of 2,500 to 2,800 pounds or wire having a strength of 3,400 pounds. Gin standard bales are normally packaged with eight steel bands having a tensile strength of 2,500 to 2,800 pounds and special buckles or wire having a tensile strength of 3,400 pounds. Gin universal bales are normally packaged with eight flat, cold-rolled steel bands having a tensile strength in excess of 4,000 pounds.

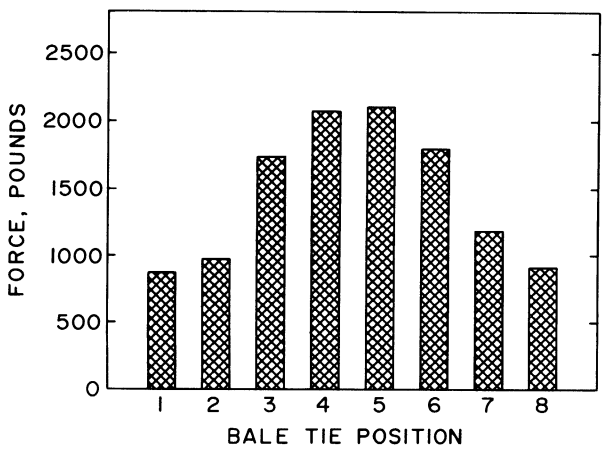

FIGURE 3–56.—Bale tie force distribution for one gin universal bale press.

The relationship between the maximum force per tie, the platen separation to which a bale is pressed before applying the ties, and the bale circumference at the tie after the bale is released from the press is shown in figure 3–57 for 500-pound bales at 5-percent lint moisture packaged in a gin universal press.

EXAMPLE: Determine the maximum tie force exerted on one of eight equally spaced bale ties on a 500-pound bale at 5-percent lint moisture packaged in a gin universal press. The bale circumference at the tie is 85 inches.

SOLUTION: Refer to figure 3–57 and note that 3,000 pounds of force is exerted when the bale is compressed to a platen separation of 21 inches and 2,050 pounds when the bale is compressed to 19 inches.

A change in platen separation of only 2 inches resulted in a 32-percent reduction in bale tie force.

Variation in the bale circumference also has a pronounced effect on bale tie force. When a 500-pound bale at 5-percent lint moisture is compressed to a platen separation of 19 inches

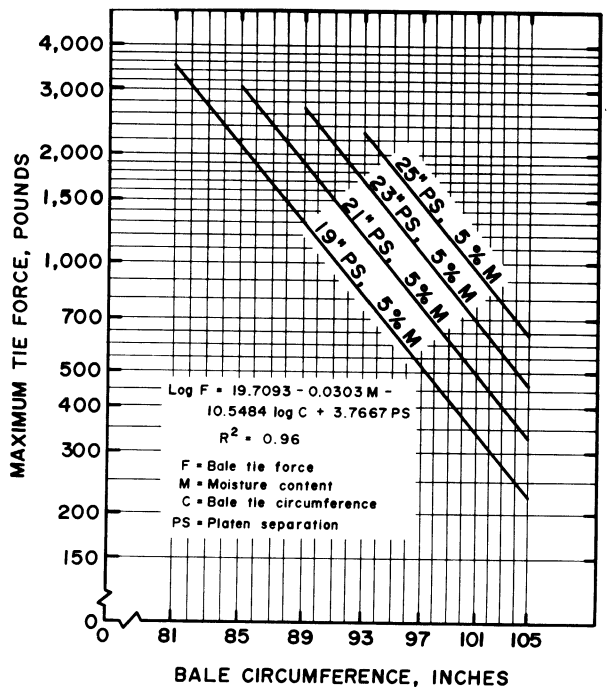

FIGURE 3–57.—Maximum tie force per tie exerted by 500-pound bales of Upland cotton at 5-percent lint moisture content.

in a gin universal press, a maximum tie force of 2,350 or 1,650 pounds results, depending on whether restrained bale circumference is 84 or 88 inches, respectively (fig. 3–57). A change in bale circumference of only 4 inches resulted in a 30-percent reduction in bale tie force. Note that 4 inches of bale circumference produces a 2-inch change in bale thickness (table 3–17).

The maximum tie forces exerted by bales produced in flat and modified flat presses vary in much the same manner as in gin universal presses, although the forces involved are lower.

The maximum tie force exerted by bales can be reduced by uniform distribution of the lint cotton in the press box. When the lint cotton is very unevenly distributed in the press box, one tie may have 300 percent more force exerted on it than another tie on the same bale.

The force used to compress lint cotton and the tensile strength of the bale ties used to restrain lint cotton can be varied to compensate for low moisture or large bales.

Special care must be taken to insure that the bale ties are not overstressed. Broken bale ties can be quite expensive to replace since the bale must be repressed before a new tie can be applied.

REFERENCES

National Cotton Council, Universal Bale Committee. 1972. A universal bale for universal benefits, 7 pp.

Anthony, S., and McCaskill, O. L. 1973. Forces involved in packaging lint cotton. The Cotton Gin and Oil Mill Press 74(15): 7–11.

Watson, L. J., and Stedronsky, V. L. 1943. Packing of cotton at gins for uniform density. U.S. Dep. Agric. Misc. Pub. 527, 22 pp.

SECTION 4.—MATERIALS HANDLING

Separators and Droppers

By T. E. Wright

The main function of the separator in the gin outfit is to separate the seed cotton from the conveying air. The separator is usually the first machine in the ginning process to receive seed cotton and is subjected to the most severe operating conditions of uneven material flow and negative (suction) pressure. High-capacity ginning has made the operating conditions more severe and has brought about heavier and tighter construction in separator design.

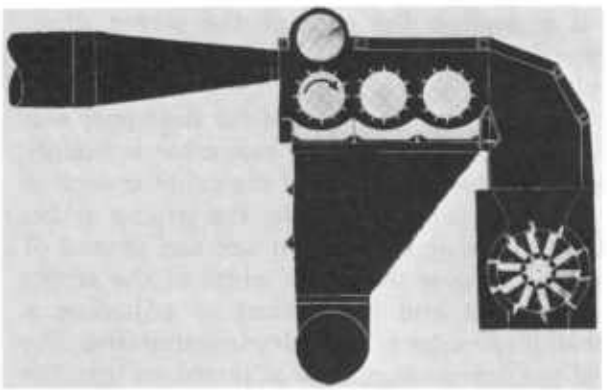

FIGURE 4–1.—Separator with multiple screen sections and cylinders (Bush-Hog/Continental Gin).

Separators of present manufacture are of four basic types: (1) those in which the main flow of seed cotton does not come in contact with a stationary screen and in which the screen is cleaned by rubber wiper flights attached to a revolving reel or cleaner-type cylinders (figs. 4–1—4–3); (2) those in which the seed cotton is directed onto a stationary screen and in which the screen is kept clean by rubber wiper flashing attached to a revolving reel (fig. 4–4); (3) those in which the seed cotton is directed over and around a revolving screen drum and in which the screen is kept clean by centrifugal force of the rotating drum (fig. 4–5); and (4) those in which the seed cotton is directed diagonally onto a stationary grid-bar screen and in which the screen is cleaned by the wiping action of the incoming seed cotton and air (fig. 4–6).

The first and second types of separators have

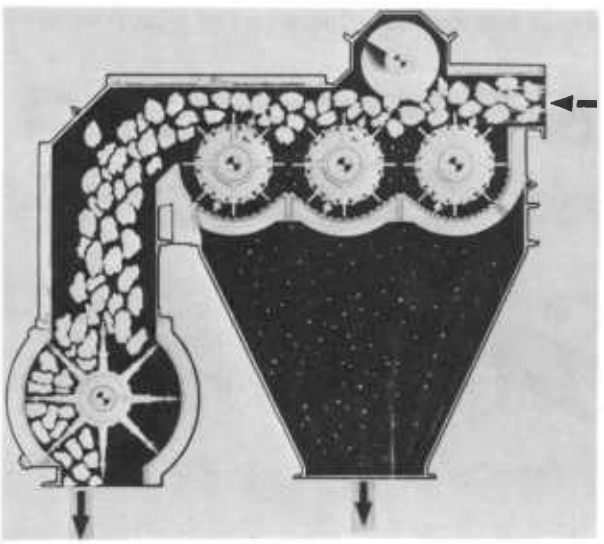

FIGURE 4–2.—Separator with multiple screen sections and cylinders (Murray-Piratininga).

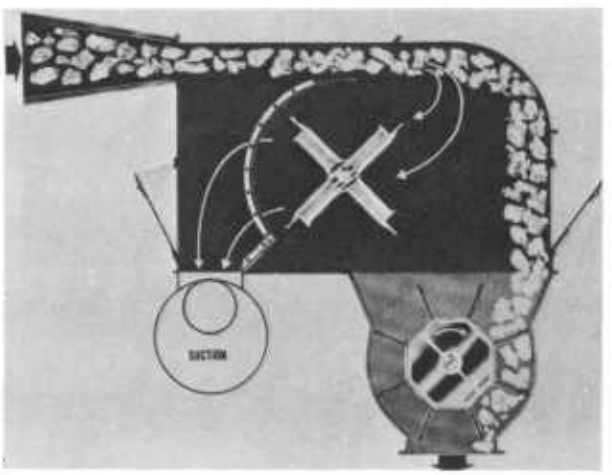

FIGURE 4–3.—Separator with reversed curved screen and revolving reel (Hardwicke-Etter).

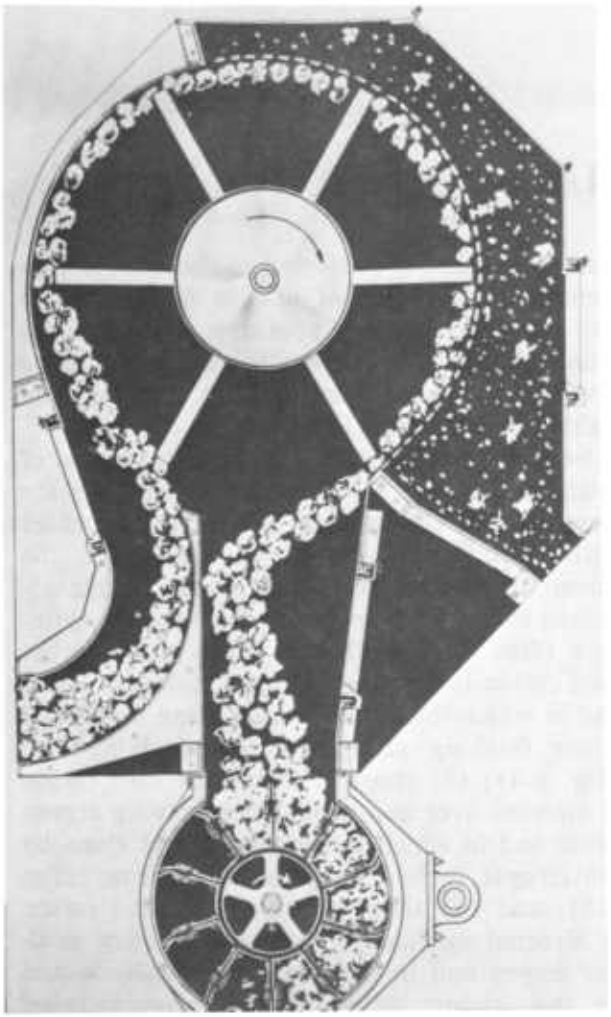

FIGURE 4–4.—Separator with curved screen and revolving reel (Lummus).

rubber wipers on the rotating member or members. These wipers, which clean the screen, require little maintenance unless they are subjected to high temperature, as is the case when the separator is used as the receiving unit in the drying system. However, the wipers should be inspected periodically for wear and damage. The wipers are made with slotted fastening holes and can be adjusted to the screen as wear occurs. If the wipers have become set in a cupped position away from the screen, they can sometimes be removed and turned over to give further service. Excessively worn and broken wipers should be replaced.

The upper section of the third type of separator requires little maintenance other than periodic inspection of the seal flashing to see if it is sealing the ends of the screen drum properly. Worn or damaged flashing should be replaced.

The maintenance required for the upper section of the fourth type of separator is mainly periodic inspection to see if the grid-bar section is being properly cleaned by the wiping action of the incoming seed cotton and air. Spread of seed cotton over the entire width of the screen is important and is obtained by adjusting a dovetail spreader in the inlet transmission. The grid-bar screen should be adjusted so that the ends of the grid bars clear the back baffle by approximately 2 inches.

The rubber flights in the lower, or vacuum, section of all separators require more attention and more frequent adjustment or replacement than do the rubber wipers in the upper screen

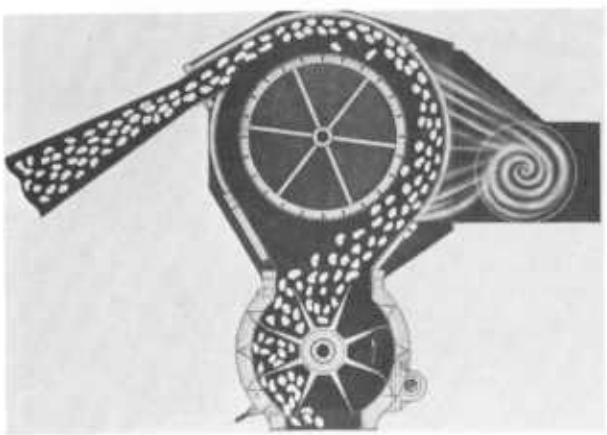

FIGURE 4–5.—Separator with revolving screen drum (Bush-Hog/Continental Gin).

FIGURE 4–6.—Separator with curved grid-bar screen (Kimbell-Bishard).

section of the separator. To minimize air leakage into or out of the separator, these flights must be maintained in proper adjustment and good condition. When separation choking occurs, it is usually because the flights have become so worn and damaged that they are not properly sealing against the side scrolls. Under this condition, the air leakage passing the flights may cause an updraft of sufficient force to float the seed cotton in the upper section and prevent it from discharging through the vacuum section.

Vacuum wheels, or droppers, are used in the gin outfit to meter seed cotton, seed, and trash into a conveying airstream. They are also used as a sealer to prevent escape of air while the seed cotton or seed is metered from an airstream into an "out of line" type of gin machine.

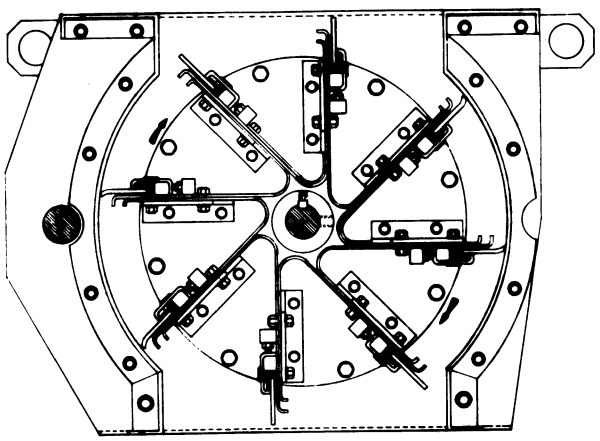

FIGURE 4–7.—Seed-cotton vacuum-wheel dropper.

A typical seed-cotton dropper is shown in figure 4–7; most droppers are identical in construction and maintenance requirements to the lower or vacuum section of the separator. When adjusting or installing flights, the manufacturer's instructions should be followed carefully. Generally, flights should be set so that the edges rub securely against the side scrolls. They should be set out sufficiently so that when they pass the side scroll they will bend approximately one-half inch and not more than three-fourths inch from a straight line. They should not be required to bend or flex unduly. When the rubber flights are checked or replaced, the rubber flashings or wipers on the ends of the vacuum cylinder should also be inspected and replaced if they are damaged or worn. Some of the latest models of seed-cotton droppers have quick-change rubber flights that make repair and maintenance quick and easy. Most new drying systems incorporate a deflector dropper, commonly called a flight-saver, between the seed-cotton dropper and the hot-air stream. The flight-saver deflects most of the hot air away from the seed-cotton dropper, lengthening the life of the rubber flight. Seed-cotton droppers used in the drying system should be equipped with heat-resistant flights.

Trash and seed droppers are smaller in di-

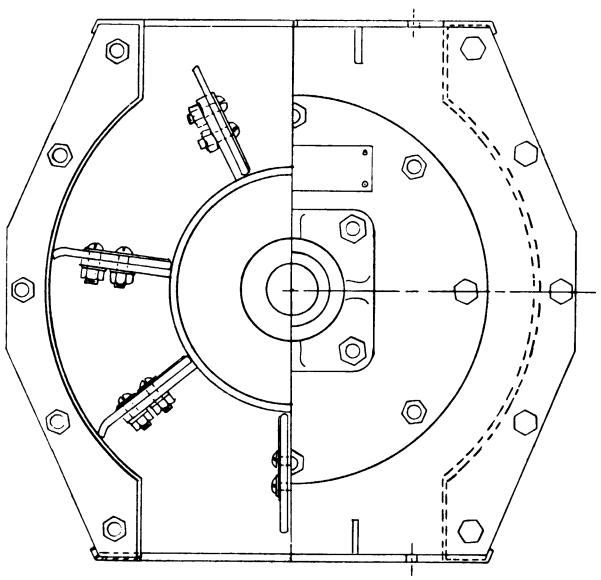

FIGURE 4–8.—Trash vacuum-wheel dropper.

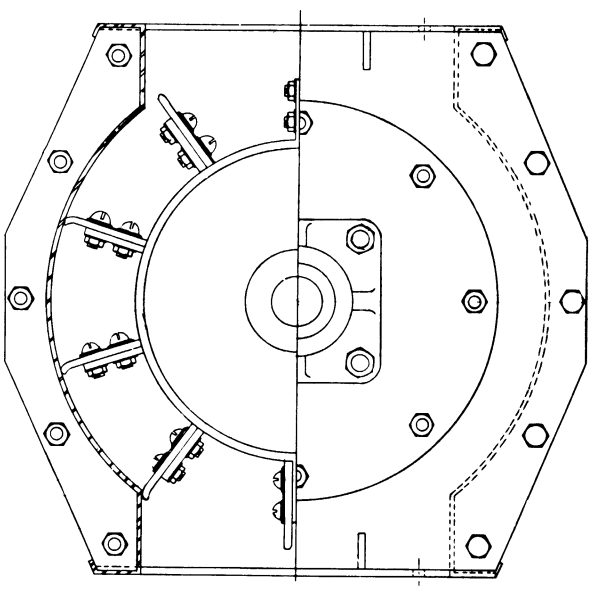

FIGURE 4–9.—Cottonseed vacuum-wheel dropper.

TABLE 4–1.—*Capacities and power requirements for various sizes of separators and droppers*[1]

Machine	Inside width (inches)	Dropper diameter (inches)	Recommended capacity[2]	Motor required (hp)	Dropper speed (r/min)
Separator[3]	72	22½	1–8 b/h	10	65/70
Do[3]	72	22½	8–16 b/h	15	65/70
Do[3]	72	34	16–24 b/h	20	65/70
Do[3]	96	34	24–35 b/h	25	65/70
Seed-cotton dropper	72	22½	8–16 b/h	10	65/70
Do	72	34	16–24 b/h	15	65/70
Do	96	34	24–35 b/h	20	65/70
Seed droppers	12	16	235 lb/min	1	50/55
Do	18	16	352 lb/min	2	50/55
Do	24	16	470 lb/min	3	50/55
Trash droppers	12	16	120 lb/min	1	50/55
Do	18	16	180 lb/min	2	50/55
Do	24	16	240 lb/min	3	50/55

[1] Courtesy of Lummus Industries, Inc., Columbus, Ga.
[2] b/h=bales per hour.
[3] When used as live overflow separator, only 10-hp motor required.

ameter and length than seed-cotton droppers. The typical trash (figs. 4–8) and seed (fig. 4–9) droppers are of the same basic design; the main difference is that the seed dropper has more flights than the trash dropper. The additional flights are necessary to obtain sufficient sealing power for feeding into high-pressure seed lines. Trash and seed are very abrasive, and the flights in these droppers will require more frequent inspection and maintenance than those of the seed-cotton dropper.

A special type of seed dropper (fig. 4–10) is being used in some modern high-capacity gin plants. This dropper has a close-fitting, all-steel, eight-blade rotor or wheel, which requires no flexible flights or flashing. It operates very efficiently in high-pressure seed systems using positive-pressure blowers.

Capacity and power requirements for various sizes of separators and droppers manufactured by one of the major gin machinery companies are given in table 4–1. These data are averages and will vary considerably for different types of cotton. The manufacturer should always be consulted in making capacity and power estimates for separators and droppers.

Separators and droppers used in gin pneumatic systems may constitute a major source of power waste. Continuous upkeep, inspection, and repair are necessary to reduce air leakage. Even new and well-sealed separators have a significant intake and leakage of air through the vacuum dropper section: a 35-percent loss at the separator is not uncommon. A periodic check of all separators and droppers will greatly reduce downtime from chokages caused by improper settings or worn parts in the separator or dropper.

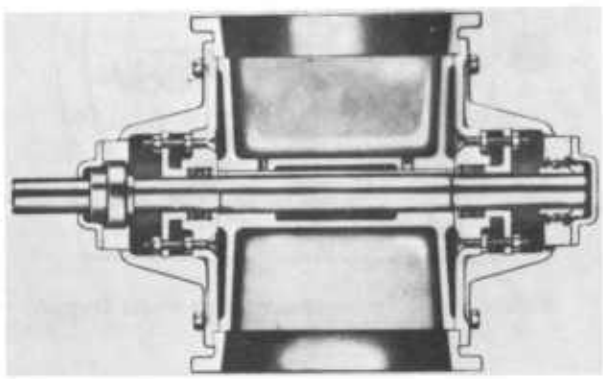

FIGURE 4–10.—Cottonseed vacuum-wheel dropper with close fitting, all-steel, eight-blade rotor.

Fans and Piping

By OLIVER L. MCCASKILL, R. V. BAKER, and V. L. STEDRONSKY

Pneumatic systems consume from 40 to 60 percent of the total power required in a modern cotton gin. These systems are used to convey seed cotton from truck, trailer, or storage; operate cotton conditioners or driers; supply air to the doffing nozzles of airblast gins; convey cotton from point to point in the ginning system; and convey seed, hulls, and trash.

AIR FACTS GINNERS SHOULD KNOW

There are a few major definitions and facts that a ginner should keep in mind when dealing with pneumatic handling systems, in order to conserve power and keep them operating properly.

1. "Static" or resistance pressure in piping systems corresponds to blood pressure in the human body. "Velocity" pressure in piping systems is like the heartbeat that causes blood to flow; it conveys the material in a pipe. Static pressure plus velocity pressure make up the total pressure against which a fan must operate.

2. Few open-wheel cotton gin fans have an efficiency greater than 50 percent. Rembert-type fans, with perforated disks that close the wheel, have approximately 35 percent efficiency.

3. Where pipe lengths are equal and where equal flow of air is handled, smaller pipes require more power and cause greater friction resistance or static pressure than do larger pipes (fig. 4–11). Table 4–2 shows the equivalent straight-pipe resistance for 90° elbows.

TABLE 4–2.—*Resistance of 90° elbows (round duct)*[1]

Throat radius of elbow in pipe diameters	½	¾	1	1¼	1½	2	3
Diameters of straight pipe offering equivalent resistance	17	14	12	11	9.7	8.5	6.5

[1] For bends of less than 90° the equivalent resistance is in proportion to the arc. For example, a 60° bend will have ⅔ the equivalent resistance.

Example: A 90° elbow in 24-inch round pipe with a 24-inch throat radius will have the equivalent of 12 diameters, or 24 feet, of straight duct.

4. Piping velocities for handling dry seed cotton should be held below 4,500 feet per minute to avoid cracking or shattering seed where the material hits fan disks, sharp-turn elbows, separator reels, and other objects (table 4–3).

5. Airflow calculations should include leakage as well as flow in pipes. Up to 30 percent leakage in the vacuum wheel of the separator must be allowed for at the fan. Tower driers also frequently leak, and stopping air leaks often saves money for gin owners.

6. Normal operating speeds vary, usually from 1,400 revolutions per minute to 3,000 revolutions per minute, but for safety the tip speed of the wheel should not exceed 18,000 feet per minute. Forward-pitch fan wheels are sensitive to speed changes and therefore usually waste more power than do straight-blade wheels. Dampers should be provided on the intakes of airblast fans (fig. 4–12). By use of slides or other good dampers on fan intakes, a substantial saving in power consumption is often possible. Cutting holes in pipes to relieve

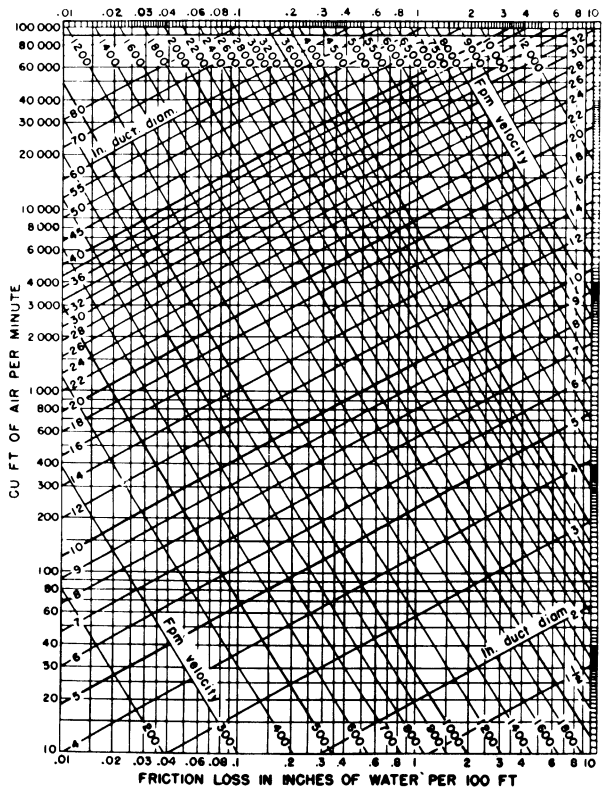

FIGURE 4–11.—Friction loss in round pipe per 100 feet of length.

pressures or to increase airflow is usually unsatisfactory.

Large-diameter fan wheels operating at low speeds are generally more efficient and produce less noise than small-diameter fan wheels at high speeds. Since cotton-gin fan casings have a large clearance, it is possible to adapt three sizes of wheels to the fan, namely, an oversize, a standard, or an undersize wheel. Thus a No. 40 fan can be converted to a No. 35–40 or No. 40–45 fan by changing the wheel. The true size of any fan is the size of its wheel.

PIPING

A practical pneumatic system must convey material efficiently from point to point. In cotton gins air is directed through pipes that vary in diameter from 6 to 36 inches, made of galvanized iron sheet from 24 to 36 gage. Piping systems are an important part of the gin and should be carefully planned and maintained. Some good rules to follow are:

TABLE 4–3.—*Volume of airflow rate in various sizes of pipe based on mean linear velocity of 4,500 feet per minute*

Pipe dimensions		Volume flow rate[2]
Diameter (inches)	Area[1] (ft^2)	(ft^3/min)
5	0.136	614
6	.196	884
7	.267	1,203
8	.349	1,571
9	.442	1,988
10	.545	2,454
11	.660	2,970
12	.785	3,534
13	.922	4,148
14	1.069	4,811
15	1.227	5,522
16	1.396	6,283
17	1.576	7,093
18	1.767	7,952
19	1.969	8,860
20	2.182	9,817
21	2.405	10,824
22	2.640	11,879
24	3.142	14,137
26	3.687	16,591
28	4.276	19,242
30	4.909	22,089

[1] Area (ft^2) $=\frac{\pi r^2}{144}=\frac{0.7854d^2}{144}$, where r=radius in inches and d=diameter in inches.

[2] Volume flow rate (ft^3/min) $=4{,}500\times$area (ft^2).

1. Make the piping as simple and direct as possible, eliminating unnecessary elbows and valves.
2. Keep all joints airtight and rigid to prevent air leakage. This saves horsepower.
3. For good suction in seed-cotton pipe, maintain velocities of 4,000 to 5,000 feet per minute. Telescope diameters are usually 12 to 24 inches, depending on the seed-cotton requirements of the ginning system.
4. For conveying trash, keep the pipe diameter between 8 and 16 inches, and for seed, between 10 and 13 inches. The velocity in the pipe should be about 4,500 feet per minute for seed cotton or trash, and at least 5,300 feet per minute for seed. (This rule does not apply to small-pipe seed-blowing systems where the velocity is held to approximately 4,500 feet per minute, while the pressure is greatly increased and the volume of air is reduced.)
5. Do not allow piping for cottonseed or seed cotton to slope downward in the direction of flow; downward slopes may cause chokages.
6. A Rembert-type fan is simple and economical for handling seed cotton in storage-house operations. However, a standard separator and fan system with well-designed piping is more efficient and provides greater capacity than the Rembert-type fan system.
7. Approximately 20 cubic feet of air per pound of material should be sufficient for series fans on the unloading system and push-pull fans on the drying systems. This volume will vary depending on static pressure demands on the fan.

Air velocities required for efficient conveying of the materials handled at gins are:

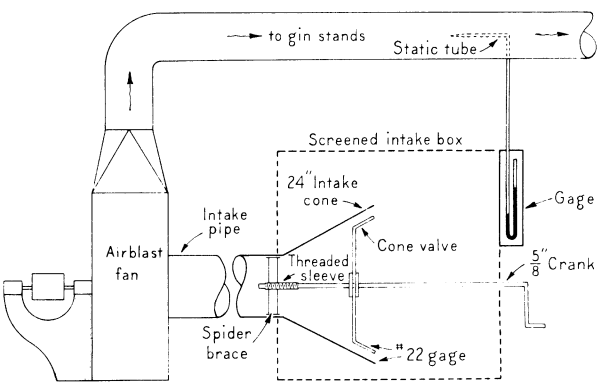

FIGURE 4–12.—Airblast fan-intake control.

	Feet per minute
Seed cotton	4,000–5,000
Seed cotton in tower drier	1,500–2,000
Dried seed cotton (from machine to machine)	4,000–5,000
Seed	5,000–5,500
Hulls and trash	4,000–5,000
Lint cotton	1,500–2,000

Keep in mind that the flow of air in a pipe is similar to the flow of water in a pipe, although flow rate is measured in cubic feet per minute instead of gallons per minute. Pressures within the air pipes are expressed in inches of water (in H_2O) measured on a U-tube gage or manometer, rather than in pounds per square inch. Most cotton-gin centrifugal fans operate against static pressures or resistance below 1 pound per square inch (27.8 inches of water).

The number, size, and operating rate of gin stands will determine the required rate of flow of seed cotton to the gin (usually from 8 to 30 bales per hour). This flow rate and the layout of the gin floor should determine the dimensions and arrangement of the piping (table 4–4). The air pressures needed to overcome the resistance of equipment and pipes and the quantity of cotton needed to supply the gins will determine what fan capacity is required.

AIR MEASUREMENTS

Even when fan speeds, wheel diameter, and other factors are known, it is difficult to predict fan performance accurately. The only reliable way to determine how a fan is performing and to determine a system's characteristics is by making air readings. Pneumatic systems in gins vary greatly, and no two installations are identical. However, the necessary determinations can be made with a relatively simple kit of tools and instruments containing the following items:

TABLE 4–4.—*Suggested seed-cotton pipe sizes for various ginning capacities*

Ginning capacity (bales/hour)	Seed-cotton pipe diameters (inches)	
	Unloading[1]	Drying systems
6–10	13	14
11–15	14	16 or two 12
16–20	16	18 or two 13
21–25	18	20 or two 14
26–30	20	24 or two 17

[1] Conveyor pipes from the telescope to the separator.

1. A $\frac{5}{16}$-inch-diameter standard or a ⅛-inch-diameter pocket-size pitot tube. The ⅛-inch-diameter pitot tube is accurate enough for all practical purposes in round pipes up to 24 inches in diameter. It requires a hole in the pipe only 9/64 inch in diameter, which is not large enough to require patching.
2. A manometer or U-tube to measure velocity pressure (P_v) and static pressure (P_s). A 24-inch manometer should be sufficient to check fan-system characteristics, with the exception of static pressure in a series fan unloading system.
3. Two 5-foot lengths of rubber or plastic hose to connect the pitot tube to the manometer.
4. Speed indicator for measuring fan speeds.
5. A measuring tape for determining pipe diameters.
6. Tables of airflow for various pipe diameters and velocity pressures.

To find the volume of air, velocity, pressures, and horsepower in a piping system, readings must be taken at the fan inlet and discharge. Since a fan may be used either for suction or for blowing through pipes, the static readings are taken at both the fan inlet and the fan outlet to find the overall static pressure. An outlet reading is all that is necessary on a fan used only for blowing. Readings may also be taken wherever information is needed, such as at troublesome points in suction, drying, and airblast piping systems; and at separator inlets and outlets to determine leakage. Test holes should be located approximately 8½ pipe diameters downstream and 1½ pipe diameters upstream from elbows and valves when possible. Gin fans usually operate at static pressures ranging from 5 to 26 inches of water.

The following are directions for using the test kit:

1. Fill the manometer half full of the liquid (water or oil) recommended by the manufacturer. An oil manometer is preferable to prevent damage from freezing in cold weather operations.
2. Connect the manometer to the pitot tube with the two lengths of flexible hose.
3. Insert the pitot tube into the test hole, until the end reaches the center of the pipe. The stem of the pitot tube should be kept at a right angle to the pipe, while the nose of the tube points upstream into the air current.

TABLE 4–5.—*Volume of air delivered by various velocity pressures* (Pv) *and pipe diameters*[1]

Velocity pressure (inH_2O)	Velocity (ft/min)	Air volume (ft3/min) for pipe diameter of—																					
		5"	6"	7"	8"	9"	10"	11"	12"	13"	14"	15"	16"	17"	18"	19"	20"	21"	22"	24"	26"	28"	30"
0.1	1,154	157	227	308	403	510	630	762	907	1,064	1,234	1,416	1,612	1,819	2,040	2,273	2,518	2,776	3,047	3,626	4,256	4,936	5,666
.2	1,632	223	321	436	570	721	890	1,099	1,282	1,505	1,745	2,003	2,279	2,573	2,885	3,214	3,561	3,926	4,309	5,128	6,018	6,980	8,013
.3	1,999	273	393	534	698	883	1,090	1,319	1,570	1,843	2,137	2,453	2,791	3,151	3,533	3,936	4,362	4,809	5,277	6,281	7,371	8,549	9,813
.4	2,308	315	453	617	806	1,020	1,259	1,523	1,813	2,128	2,468	2,833	3,223	3,639	4,079	4,545	5,036	5,553	6,094	7,252	8,511	9,871	11,332
.5	2,581	352	507	690	901	1,140	1,408	1,703	2,027	2,379	2,759	3,167	3,604	4,068	4,561	5,082	5,631	6,208	6,813	8,108	9,516	11,036	12,669
.6	2,827	386	555	756	987	1,249	1,542	1,866	2,221	2,606	3,022	3,470	3,948	4,456	4,996	5,567	6,168	6,800	7,463	8,882	10,424	12,090	13,878
.7	3,054	416	600	816	1,066	1,349	1,666	2,015	2,398	2,815	3,265	3,748	4,264	4,814	5,397	6,013	6,662	7,345	8,061	9,594	11,259	13,058	14,990
.8	3,265	445	641	872	1,140	1,442	1,781	2,154	2,564	3,009	3,490	4,006	4,558	5,146	5,769	6,428	7,122	7,852	8,619	10,256	12,037	13,960	16,025
.9	3,463	472	680	925	1,209	1,530	1,889	2,285	2,720	3,192	3,702	4,249	4,835	5,458	6,119	6,818	7,554	8,329	9,141	10,878	12,767	14,807	16,997
1.0	3,650	498	717	975	1,274	1,613	1,991	2,409	2,867	3,364	3,902	4,479	5,096	5,753	6,450	7,187	7,963	8,779	9,635	11,467	13,458	15,608	17,917
1.1	3,828	522	752	1,023	1,336	1,691	2,088	2,526	3,007	3,529	4,092	4,698	5,345	6,034	6,765	7,537	8,352	9,208	10,106	12,026	14,114	16,369	18,791
1.2	3,998	545	785	1,069	1,396	1,766	2,181	2,639	3,140	3,686	4,274	4,907	5,583	6,302	7,066	7,873	8,723	9,617	10,555	12,561	14,742	17,097	19,627
1.3	4,162	567	817	1,112	1,453	1,839	2,270	2,746	3,269	3,836	4,449	5,107	5,811	6,560	7,354	8,194	9,079	10,010	10,986	13,074	15,344	17,795	20,428
1.4	4,319	589	848	1,154	1,508	1,908	2,356	2,850	3,392	3,981	4,617	5,300	6,030	6,807	7,632	8,503	9,422	10,388	11,401	13,568	15,923	18,467	21,200
1.5	4,470	610	878	1,195	1,560	1,975	2,438	2,950	3,511	4,121	4,779	5,486	6,242	7,046	7,900	8,802	9,753	10,752	11,801	14,044	16,482	19,115	21,944
1.6	4,617	630	907	1,234	1,612	2,040	2,518	3,047	3,626	4,256	4,936	5,666	6,446	7,277	8,159	9,090	10,073	11,105	12,188	14,504	17,023	19,742	22,663
1.7	4,759	649	934	1,272	1,661	2,102	2,596	3,141	3,738	4,387	5,087	5,840	6,645	7,501	8,410	9,370	10,383	11,447	12,563	14,951	17,547	20,350	23,361
1.8	4,897	668	962	1,309	1,709	2,163	2,671	3,232	3,846	4,514	5,235	6,010	6,837	7,719	8,654	9,642	10,684	11,779	12,927	15,384	18,055	20,940	24,038
1.9	5,031	686	988	1,345	1,756	2,223	2,744	3,320	3,950	4,637	5,378	6,174	7,025	7,930	8,891	9,906	10,976	12,101	13,281	15,806	18,550	21,514	24,697
2.0	5,162	704	1,014	1,380	1,802	2,280	2,815	3,407	4,054	4,758	5,518	6,335	7,207	8,136	9,122	10,163	11,261	12,416	13,626	16,217	19,032	22,072	25,338
2.1	5,289	721	1,039	1,414	1,846	2,337	2,885	3,491	4,154	4,875	5,654	6,492	7,385	8,337	9,347	10,414	11,540	12,722	13,963	16,617	19,502	22,618	25,964
2.2	5,414	738	1,063	1,447	1,890	2,392	2,953	3,573	4,252	4,990	5,787	6,644	7,559	8,534	9,567	10,660	11,811	13,022	14,291	17,008	19,961	23,150	26,575
2.3	5,535	775	1,087	1,479	1,932	2,446	3,019	3,653	4,348	5,102	5,918	6,793	7,729	8,725	9,782	10,899	12,077	13,314	14,613	17,390	20,409	23,670	27,172
2.4	5,655	771	1,110	1,511	1,974	2,498	3,084	3,732	4,441	5,212	6,045	6,939	7,895	8,913	9,992	11,134	12,336	13,601	14,927	17,764	20,848	24,179	27,757
2.5	5,771	787	1,133	1,542	2,015	2,550	3,148	3,809	4,533	5,320	6,169	7,082	8,058	9,097	10,198	11,363	12,591	13,881	15,235	18,131	21,278	24,678	28,329
2.6	5,885	803	1,156	1,573	2,054	2,600	3,210	3,884	4,622	5,425	6,292	7,223	8,218	9,277	10,400	11,588	12,840	14,156	15,536	18,490	21,700	25,167	28,890
2.7	5,998	818	1,178	1,603	2,094	2,650	3,271	3,958	4,710	5,528	6,411	7,360	8,374	9,454	10,599	11,809	13,085	14,426	15,832	18,842	22,113	25,646	29,440
2.8	6,108	833	1,199	1,632	2,132	2,698	3,331	4,031	4,797	5,630	6,529	7,495	8,528	9,627	10,793	12,026	13,325	14,691	16,122	19,188	22,519	26,117	29,981
2.9	6,216	848	1,220	1,661	2,170	2,746	3,390	4,102	4,882	5,729	6,645	7,628	8,679	9,798	10,984	12,238	13,561	14,951	16,408	19,527	22,917	26,579	30,511
3.0	6,322	862	1,241	1,690	2,207	2,793	3,448	4,172	4,965	5,827	6,758	7,758	8,827	9,965	11,172	12,448	13,792	15,206	16,689	19,861	23,309	27,033	31,033
3.1	6,426	876	1,262	1,717	2,243	2,839	3,505	4,241	5,047	5,924	6,870	7,886	8,973	10,130	11,357	12,653	14,020	15,458	16,965	20,189	23,695	27,480	31,546
3.2	6,529	890	1,282	1,745	2,279	2,885	3,561	4,309	5,128	6,018	6,980	8,013	9,117	10,292	11,538	12,856	14,245	15,705	17,236	20,512	24,074	27,920	32,051
3.3	6,631	904	1,302	1,772	2,315	2,929	3,616	4,376	5,208	6,112	7,088	8,137	9,258	10,451	11,717	13,055	14,466	15,948	17,503	20,831	24,447	28,353	32,548
3.4	6,730	918	1,312	1,799	2,349	2,973	3,671	4,442	5,286	6,204	7,195	8,259	9,397	10,609	11,893	13,252	14,683	16,188	17,767	21,144	24,815	28,779	33,037
3.5	6,829	931	1,341	1,825	2,384	3,017	3,724	4,507	5,363	6,294	7,300	8,380	9,534	10,763	12,067	13,445	14,898	16,425	18,026	21,452	25,177	29,199	33,519
3.6	6,925	944	1,360	1,851	2,417	3,060	3,777	4,570	5,439	6,383	7,403	8,499	9,670	10,916	12,238	13,636	15,109	16,658	18,282	21,757	25,534	29,613	33,995
3.7	7,021	957	1,379	1,876	2,451	3,102	3,829	4,633	5,514	6,472	7,505	8,616	9,803	11,067	12,407	13,824	15,317	16,887	18,534	22,057	25,886	30,022	34,464
3.8	7,115	970	1,397	1,902	2,484	3,143	3,881	4,696	5,588	6,558	7,606	8,732	9,935	11,215	12,574	14,009	15,523	17,114	18,783	22,353	26,234	30,425	34,926
3.9	7,208	983	1,415	1,926	2,516	3,184	3,931	4,757	5,661	6,644	7,706	8,846	10,065	11,362	12,738	14,193	15,726	17,338	19,028	22,645	26,577	30,823	35,383
4.0	7,300	995	1,433	1,951	2,548	3,225	3,982	4,818	5,733	6,729	7,804	8,958	10,193	11,507	12,900	14,373	15,926	17,559	19,271	22,934	26,915	31,215	35,834
4.1	7,391	1,008	1,451	1,975	2,580	3,265	4,031	4,878	5,805	6,812	7,901	9,070	10,319	11,650	13,060	14,552	16,124	17,777	19,510	23,219	27,250	31,603	36,279
4.2	7,480	1,020	1,469	1,999	2,611	3,305	4,080	4,937	5,875	6,895	7,997	9,180	10,444	11,791	13,219	14,728	16,319	17,992	19,747	23,500	27,580	31,986	36,719
4.3	7,569	1,032	1,486	2,023	2,642	3,344	4,128	4,995	5,945	6,977	8,091	9,288	10,568	11,930	13,375	14,903	16,513	18,205	19,880	23,770	27,906	32,365	37,153
4.4	4,656	1,044	1,503	2,046	2,673	3,382	4,176	5,053	6,013	7,057	8,185	9,396	10,690	12,068	13,530	15,075	16,703	18,416	20,211	24,053	28,229	32,739	37,583
4.5	7,743	1,056	1,510	2,069	2,703	3,421	4,223	5,110	6,081	7,137	8,277	9,502	10,811	12,205	13,683	15,245	16,892	18,624	20,440	24,325	28,548	33,109	38,007
4.6	7,828	1,067	1,537	2,092	2,733	3,458	4,270	5,166	6,148	7,216	8,369	9,607	10,930	12,339	13,834	15,414	17,079	18,829	20,665	24,594	28,863	33,475	38,427
4.7	7,913	1,079	1,554	2,115	2,762	3,496	4,316	5,222	6,216	7,294	8,459	9,711	11,049	12,473	13,983	15,580	17,264	19,033	20,889	24,859	29,175	33,836	38,843
4.8	7,997	1,090	1,570	2,137	2,791	3,533	4,362	5,277	6,281	7,371	8,549	9,813	11,166	12,605	14,131	15,745	17,446	19,234	21,110	25,123	29,484	34,195	39,254
4.9	8,080	1,102	1,586	2,159	2,820	3,569	4,407	5,332	6,346	7,447	8,637	9,915	11,281	12,736	14,278	15,908	17,627	19,434	21,329	25,383	29,790	34,549	39,661

5.0	8,162	1,113	1,603	2,181	2,849	3,606	4,541	5,486	6,410	7,523	8,725	10,016	11,396	12,865	14,423	16,070	17,806	19,631	21,545	25,641	30,092	34,900	40,063
5.1	8,243	1,124	1,618	2,203	2,877	3,642	4,496	5,440	6,474	7,598	8,812	10,116	11,509	12,993	14,566	16,230	17,983	19,826	21,760	25,896	30,391	35,247	40,462
5.2	8,323	1,135	1,634	2,224	2,905	3,677	4,540	5,493	6,537	7,672	8,896	10,214	11,621	13,120	14,708	16,388	18,159	20,020	21,972	26,148	30,688	35,591	40,857
5.3	8,403	1,146	1,650	2,246	2,933	3,712	4,583	5,546	6,600	7,745	8,983	10,312	11,733	13,245	14,849	16,545	18,332	20,211	22,182	26,399	30,982	35,931	41,248
5.4	8,482	1,157	1,665	2,267	2,961	3,747	4,626	5,598	6,662	7,818	9,067	10,409	11,843	13,369	14,989	16,700	18,504	20,401	22,390	26,641	31,273	36,269	41,635
5.5	8,560	1,167	1,681	2,288	2,988	3,782	4,669	5,649	6,723	7,896	9,151	10,505	11,952	13,493	15,127	16,854	18,675	20,589	22,597	26,892	31,561	36,603	42,019
5.6	8,637	1,178	1,696	2,308	3,015	3,816	4,711	5,700	6,784	7,962	9,234	10,600	12,060	13,615	15,264	17,007	18,844	20,776	22,801	27,135	31,846	36,934	42,399
5.7	8,714	1,188	1,711	2,329	3,042	3,850	4,753	5,751	6,844	8,032	9,316	10,694	12,167	13,736	15,399	17,158	19,012	20,960	23,004	27,377	32,130	37,263	42,776
5.8	8,790	1,199	1,726	2,349	3,068	3,883	4,794	5,801	6,904	8,103	9,397	10,787	12,274	13,856	15,534	17,308	19,178	21,143	23,205	27,616	32,410	37,588	43,150
5.9	8,866	1,209	1,741	2,369	3,095	3,917	4,836	5,851	6,963	8,172	9,478	10,880	12,379	13,975	15,667	17,456	19,342	21,325	23,404	27,853	32,688	37,911	43,520
6.0	8,941	1,219	1,755	2,389	3,121	3,950	4,876	5,900	7,022	8,241	9,558	10,972	12,483	14,093	15,799	17,604	19,505	21,505	23,602	28,088	32,964	38,231	43,887

[1] Based on standard air conditions (70° F, 29.92 inHg) and 1 center-of-the-pipe pitot tube reading (4,005 × 0.9113 = 3,650).
Velocity (ft/min) = $3{,}650\sqrt{\text{velocity pressure (inH}_2\text{O)}}$.
Volume of air (ft³/min) = velocity (ft/min) × area of pipe (ft²).

Measure the difference in liquid levels between the two columns of the manometer. This reading is the velocity pressure (P_v). The liquid column levels usually fluctuate; therefore, read the differences between the average high and the average low.

4. Disconnect the impact pressure hose from the pitot tube and leave the static pressure outlet connected (the static pressure outlet on the pitot tube is perpendicular to the stem). Insert the pitot tube into the pipe in the same manner as described in 3 above, and measure the difference in liquid levels. This reading is the static pressure (P_s); it may be checked by withdrawing the pitot tube and holding the end of the flexible hose over the test hole in the pipe. The two static pressure readings should be nearly the same.

5. Repeat procedure 4 on the opposite side of the fan and add the two static pressures to obtain the overall static pressure.

After the P_v reading has been obtained, the velocity of the air and the volume of air the fan is delivering can be obtained from table 4–5. The left-hand column of this table gives P_v, and the second column gives the velocity that corresponds to the P_v regardless of pipe diameter. The body of the table gives the volume for any given P_v reading for 0.1 to 6.0 inH_2O and pipe sizes from 5 to 30 inches in diameter. The volume can be calculated for any pipe size by the equation given in the notes to table 4–5. The velocity for the velocity pressure (P_v) reading can be obtained from table 4–5 and the area of the pipe from table 4–6.

For example, assume a P_v reading of 1.6 inches of water in a 13-inch-diameter round pipe; from table 4–5 we find that the velocity is 4,617 feet per minute, and the air volume is 4,256 cubic feet per minute. Since table 4–5 is based on standard air conditions, a density correction factor must be considered if the fan handles air at other than standard temperature and altitude. Factors for correcting for temperature and altitude are given in table 4–7.

EXAMPLE: If the fan in the above example is handling air at 200° F and is located at an altitude of 3,000 feet, the following corrections should be made.

SOLUTION:

1. From table 4–7 we find that the correction factors for temperature and altitude are 1.114 and 1.056, respectively.

2. The composite correction factor $=1.114\times1.056=1.176$.
3. The corrected velocity $=4{,}617\times1.176=5{,}430$ ft/min.
4. The corrected volume $=4{,}256\times1.176=5{,}005$ ft^3/min.

CENTRIFUGAL FANS

Two types of fans are in common use in gins, centrifugal and axial flow, but centrifugal fans are in the majority. The centrifugal fan has a single inlet and is fully enclosed in a cast-iron or sheet-metal housing in which bladed wheels revolve (fig. 4–13). Size designations are confusing because each manufacturer uses his own descriptive terms. Many fans, however, are designated simply by size from No. 20 to No. 70 or F–76 to F–238.

Rembert fans (fig. 4–13, *C* and *D*) with perforated flat disks or cones permit the material to pass through the fan housing without damage from the wheel. These fans are generally used for transferring seed cotton from one location to another (such as from trailer to storage place) without use of a separator.

Fans should not be operated at speeds higher than necessary, and wheel-tip speed should never exceed 18,000 feet per minute. If it becomes necessary to speed up fans, resulting changes in performance may be calculated from the following basic laws:

1. Capacity (cubic feet per minute) varies directly with the speed (revolutions per minute).
2. Pressure (inches of water) varies as the square of the speed (revolutions per minute).

TABLE 4–6.—*Area and circumference of round pipe*

Diameter (inches)	Area: Square inches	Area: Square feet	Circumference (inches)
1	0.79	0.005	3.14
2	3.10	.022	6.28
3	7.07	.049	9.42
4	12.57	.087	12.57
5	19.60	.136	15.71
6	28.27	.196	18.85
7	38.48	.267	21.99
8	50.27	.349	25.13
9	63.60	.442	28.27
10	78.50	.545	31.42
11	95.00	.660	34.56
12	113.10	.785	37.70
13	132.70	.922	40.84
14	153.90	1.069	43.98
15	176.70	1.227	47.12
16	201.00	1.396	50.26
17	226.90	1.576	53.41
18	254.40	1.767	56.55
19	283.50	1.969	59.69
20	314.10	2.182	62.83
21	346.30	2.405	65.97
22	380.10	2.640	69.11
23	415.40	2.885	72.26
24	452.30	3.142	75.40
25	490.80	3.409	78.54
26	530.90	3.687	81.68
27	572.50	3.967	84.82
28	615.70	4.276	87.96
29	660.50	4.587	91.11
30	706.80	4.909	94.25
31	754.70	5.241	97.39
32	804.20	5.585	100.53
33	855.30	5.940	103.67
34	907.90	6.305	106.81
35	962.10	6.681	109.96
36	1017.80	7.069	113.10
37	1075.20	7.467	116.24
38	1134.10	7.876	119.38
39	1194.50	8.296	122.52
40	1256.60	8.727	125.66

$$\text{Area}=3.14\times\frac{\text{diameter}^2}{4}=0.7854\times\text{diameter}^2.$$

$$\text{Circumference}=3.14\times\text{diameter}.$$

TABLE 4–7.—*Air velocity corrections for temperature and altitude*[1]

Temperature (°F)	Correction factor	Altitude (feet m.s.l.)	Correction factor
0	0.932	[2]0	1.000
20	.952	500	1.009
40	.971	1,000	1.018
60	.990	1,500	1.028
[3]70	1.000	2,000	1.037
80	1.009	2,500	1.046
100	1.028	3,000	1.056
120	1.046	3,500	1.066
140	1.064	4,000	1.075
160	1.082	4,500	1.086
180	1.098	5,000	1.095
200	1.114	5,500	1.106
225	1.137		
250	1.157		
275	1.177		
300	1.197		
350	1.236		
400	1.273		
450	1.310		
500	1.345		

[1] For correcting table 4–5 for other than standard conditions.
[2] Sea level. Standard condition.
[3] Standard condition.

3. Power (horsepower) varies as the cube of the speed (revolutions per minute).

These laws are expressed in formulas as follows:

$$\frac{\text{Original capacity}}{\text{Final capacity}} = \frac{\text{original speed}}{\text{final speed}}. \quad (1)$$

$$\frac{\text{Original pressure}}{\text{Final pressure}} = \frac{\text{original speed squared}}{\text{final speed squared}}. \quad (2)$$

$$\frac{\text{Original horsepower}}{\text{Final horsepower}} = \frac{\text{original speed cubed}}{\text{final speed cubed}}. \quad (3)$$

Motor current can be substituted for horsepower in equation 3, with only a slight error, so long as the voltage and frequency remain the same. This will be more convenient for ginners since motor current is easier to measure than actual horsepower. The results will be accurate enough for field calculations.

$$\frac{\text{Original motor current}}{\text{Final motor current}} = \frac{\text{original speed cubed}}{\text{final speed cubed}}. \quad (4)$$

Many ginners do not realize what equation 4 means to them in power consumption. If the speed of a fan is doubled, the capacity is also doubled; but the resistance pressure is four times as great and the horsepower consumed is eight times as great.

Assume, for example, that a fan operating at 1,100 revolutions per minute and delivering 2,500 cubic feet per minute of air against a static pressure of 6 inches of water is using 5 horsepower. With all other conditions remaining the same, the speed is doubled to 2,200 revolutions per minute. The volume of airflow will be doubled, to 5,000 cubic feet per minute; the static pressure will be increased to 24 inches of water resistance; and the power consumed will increase from the initial 5 to 40 horsepower.

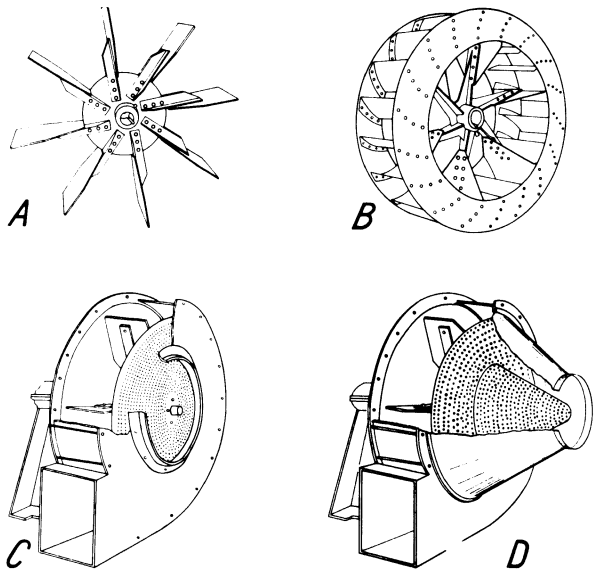

FIGURE 4–13.—Representative types of cotton-gin fan wheels. *A*, Plain eight-bale wheel. *B*, Shrouded multiblade wheel. *C*, Rembert-type wheel in casing. *D*, Rembert-type cone developed by the USDA cotton ginning laboratories (public patent).

TABLE 4–8.—*Selection of fans for most efficient operation*

Fan size or equivalent	Most efficient		Static pressure[2]	
	Capacity range (ft^3/min)	Speed range[1] (r/min)	Straight-blade (inH_2O)	Multiblade (inH O)
Single 20	1,250 to 1,750	2,200 to 3,000	Up to 14	Up to 17
Single 25	1,500 to 2,000	1,800 to 2,800	Up to 16	Up to 19
Single 30	2,000 to 3,000	2,000 to 3,000	Up to 18	Up to 21
Single 35	3,000 to 4,000	2,000 to 2,600	Up to 18	Up to 21
Single 40	4,000 to 5,000	1,800 to 2,400	Up to 22	Up to 24
Single 45	5,000 to 6,000	1,600 to 2,200	Up to 23	Up to 25
Single 50	6,000 to 8,000	1,400 to 2,000	Up to 22	Up to 25
Parallel 40	8,000 to 10,000	1,800 to 2,400	Up to 22	Up to 24
Parallel 45	10,000 to 12,000	1,600 to 2,200	Up to 23	Up to 25
Parallel 50	12,000 to 16,000	1,400 to 2,000	Up to 22	Up to 25
Series 40	4,000 to 5,000	1,800 to 2,400	Up to 44	Up to 48
Series 45	5,000 to 7,000	1,600 to 2,200	Up to 46	Up to 50
Series 50	6,000 to 8,000	1,400 to 2,000	Up to 44	Up to 50

[1] Fan wheel tip velocity should not exceed 18,000 ft/min.

[2] Fan intake plus discharge static pressure. These values will vary slightly with manufacturer and number of blades on wheel.

Care should be taken to choose a fan that will be operating within the most efficient capacity range and within the speed range recommended by the manufacturer. Table 4–8 can be used as a guide for selecting fans for their most efficient operation.

Most manufacturers base fan performance ratings on handling standard air at 70° F and 29.92 inches of mercury barometric pressure, and weighing 0.075 pound per cubic foot. Corrections to pressure and horsepower for variations in temperature and altitude are given in table 4–9.

EXAMPLE: Select a fan with a capacity of 5,000 cubic feet per minute at 140° F with a system static pressure of 12 inches of water to be operated 2,500 feet above sea level.

SOLUTION:

1. From table 4–9 we find that the correction factors for temperature and altitude are 1.13 and 1.10, respectively.
2. Composite correction factor $=1.13\times1.10=1.24$.
3. 12 inH_2O $\times$ 1.24 $=$ 14.9 inH_2O static pressure at 70° F and sea level.
4. Fan performance tables of one manufacturer show a size 40 gin fan has a capacity of 5,000 ft^3/min against a static pressure of 15 inH_2O at a speed of 1,800 r/min and will require 18.7 hp.
5. Correct the horsepower and pressure to operating conditions of 140° F and 2,500 ft altitude:

$$18.7 \text{ hp} \div 1.24 = 15 \text{ hp.}$$

$$14.9 \text{ inH}_2\text{O} \div 1.24 = 12 \text{ inH}_2\text{O } P_s.$$

6. Final performance at altitude and temperature: 5,000 ft^3/min, 12 inH_2O P_s, 1,800 r/min, and 15 hp.

The performance characteristics curves of a fan provide a good means of determining its capabilities; the performance of fans of the same size designation will be slightly different for each manufacturer. Use the correct curves for manufacturer and fan size when checking fan performance. Figure 4–4 shows the performance characteristics curves for a size 40 straight-blade fan. If the fan capacity and speed are known, the static pressure (P_s) and horsepower (hp) can be determined from the fan curve as follows: Go to 4,500 ft^3/min on the X-axis and move vertically until you intersect the 1,800-r/min curve for horsepower (hp). Now, move horizontally to the right and read 18 hp on the Y-axis. Return to 4,500 ft^3/min on the X-axis and move vertically again until you intersect the 1,800-r/min curve for

TABLE 4–9.—*Fan performance corrections for temperature and altitude*

Temperature (°F)	Factor	Altitude (feet m.s.l.)	Factor
0	0.87	[1]0	1.00
20	.91	500	1.02
40	.94	1,000	1.04
60	.98	1,500	1.06
[2]70	1.00	2,000	1.08
80	1.02	2,500	1.10
100	1.06	3,000	1.12
120	1.09	3,500	1.14
140	1.13	4,000	1.16
160	1.17	4,500	1.18
180	1.21	5,000	1.20
200	1.25	5,500	1.22
225	1.29		
250	1.34		
275	1.39		
300	1.43		
350	1.53		
400	1.62		
450	1.72		
500	1.81		

[1] Sea level. Standard condition.
[2] Standard condition.

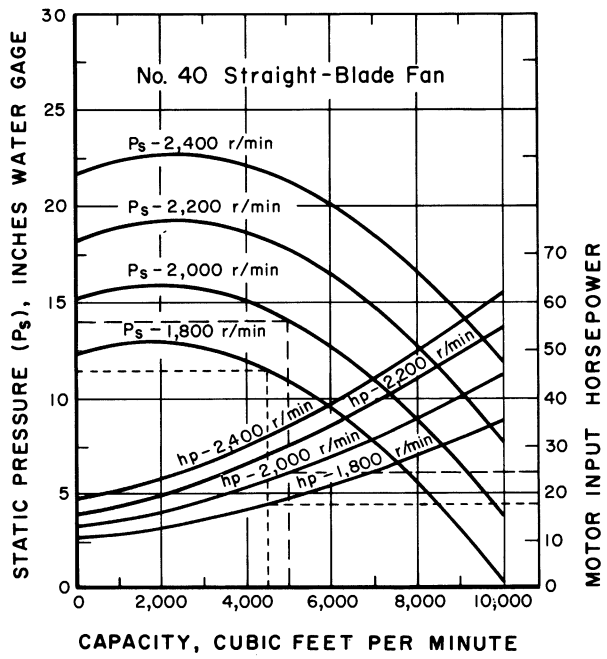

FIGURE 4–14.—Typical performance characteristic curves for a No. 40 straight-blade fan.

TABLE 4–10.—*Ampere ratings of three-phase, 60-cycle a.c. induction motors*[1]

Hp	Syn. speed (r/min)	Current in amperes 220 volts	440 volts
1	3,600	2.9	1.5
	1,800	3.2	1.6
	1,200	3.7	1.9
	900	4.1	2.1
1½	3,600	4.3	2.1
	1,800	4.6	2.3
	1,200	5.2	2.6
	900	5.8	2.9
2	3,600	5.6	2.8
	1,800	6.0	3.0
	1,200	6.5	3.3
	900	7.3	3.6
3	3,600	8.2	4.1
	1,800	8.7	4.4
	1,200	9.2	4.6
	900	10.3	5.2
5	3,600	13.3	6.7
	1,800	14.0	7.0
	1,200	14.6	7.3
	900	16.2	8.1
7½	3,600	19.4	9.7
	1,800	20.3	10.2
	1,200	20.9	10.5
	900	23.0	11.5
10	3,600	25.5	12.8
	1,800	26.6	13.3
	1,200	27.1	13.6
	900	29.8	14.9
	600	34.0	17.0
15	3,600	37.7	18.9
	1,800	39.0	19.5
	1,200	39.3	19.7
	900	43.1	21.6
	600	49.1	24.6
20	3,600	49.6	24.8
	1,800	51.0	25.5
	1,200	51.4	25.7
	900	55.8	27.9
	600	63.6	31.8
25	3,600	61.5	30.8
	1,800	62.8	31.4
	1,200	63.3	31.7
	900	68.5	34.3
	600	77.8	38.9
30	1,800	74.7	37.4
	1,200	75.0	37.5
	900	80.7	40.4
	600	91.8	45.9

See footnote at end of table.

TABLE 4–10.—*Ampere ratings of three-phase, 60-cycle a.c. induction motors*[1]—Continued

Hp	Syn. speed (r/min)	Current in amperes 220 volts	440 volts
40	1,800	98.0	49.0
	1,200	98.4	49.2
	900	105.0	52.5
	600	119.0	59.5
50	1,800	122.0	61.0
	1,200	123.0	61.5
	900	130.0	65.0
	600	146.0	73.0
60	1,800	145.0	72.5
	1,200	146.0	73.0
	900	153.0	76.5
	600	172.0	86.0
75	1,800	179.0	89.5
	1,200	180.0	90.0
	900	188.0	94.0
	600	210.0	105.0
100	1,800	235.0	118.0
	1,200	236.0	119.0
	900	247.0	124.0
	600	273.0	137.0

[1] The ampere ratings of motors vary somewhat, depending upon the type of motor, but the values given here can be considered average for the various types. In the case of high-torque squirrel cage motors, the ampere ratings will be at least 10 percent greater than the values given.

static pressure (P_s). Now move horizontally to the left and read 11.5 inH_2O on the Y-axis.

If you wish to increase the volume of air to 5,000 cubic feet per minute, the necessary speed of the fan can be calculated with equation 1:

$$\frac{\text{Original capacity}}{\text{Final capacity}} = \frac{\text{original speed}}{\text{final speed}}.$$

$$\frac{4{,}500}{5{,}000} = \frac{1{,}800}{\text{final speed}}.$$

$$\text{Final speed} = 2{,}000 \text{ r/min.}$$

The new horsepower and static pressure can now be determined from the performance curves in figure 4–14, and as previously discussed.

If fan performance curves are not available, the new conditions can be calculated if the original speed, static pressure, volume of air flow and motor current are known. This is done by using the basic laws of fan performance.

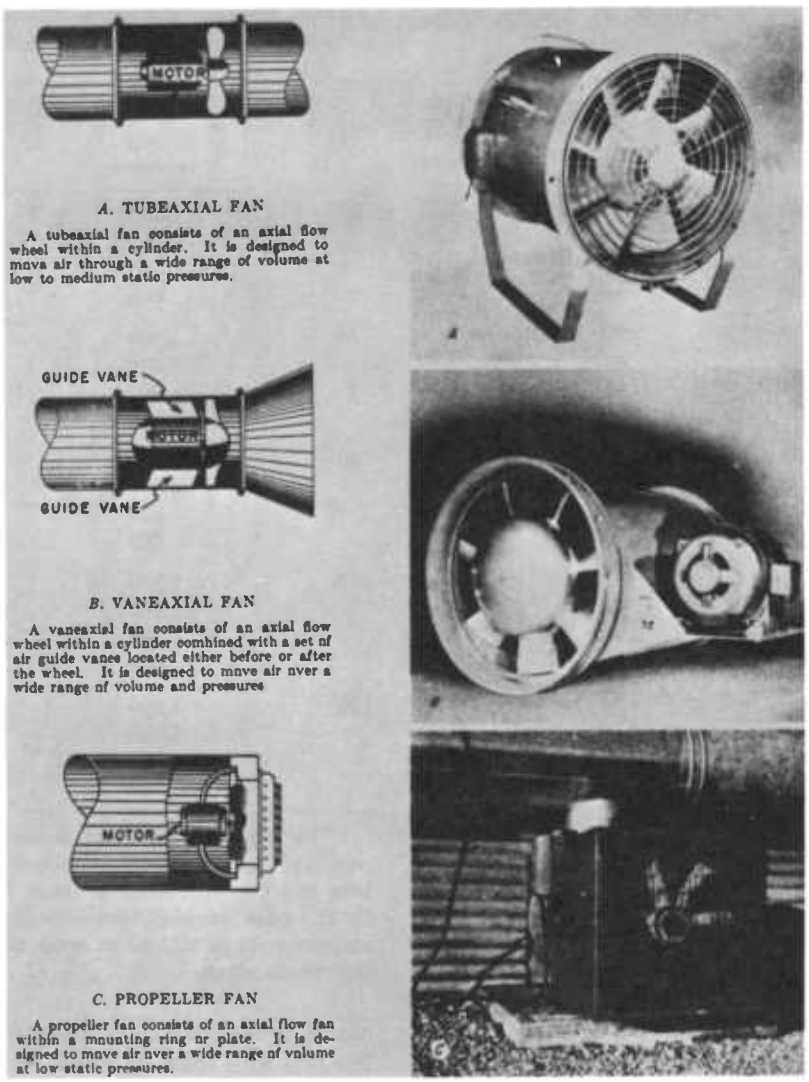

PN-5241

FIGURE 4–15.—Three types of axial flow fans.

EXAMPLE:

Original conditions for a size No. 40 straight blade fan:

Fan speed is 1,800 r/min measured with a tachometer.

Static pressure is 11.5 inH_2O measured with a pitot tube and manometer.

Volume of airflow is 4,500 ft^3/min measured with a pitot tube and manometer.

Motor current is 23 A measured with a loop-around ammeter.

SOLUTION: Volume of airflow desired is 5,000 ft^3/min.

Using equation 1:

$$\frac{4{,}500\ \text{ft}^3/\text{min}}{5{,}000\ \text{ft}^3/\text{min}} = \frac{1{,}800\ \text{r/min}}{\text{final speed}}$$

$$\text{Final speed} = 2{,}000\ \text{r/min}.$$

Using equation 2:

$$\frac{(1{,}800\ \text{r/min})^2}{(2{,}000\ \text{r/min})^2} = \frac{11.5\ \text{in}H_2O}{\text{final pressure}}.$$

$$\text{Final pressure} = 14.2\ \text{in}H_2O.$$

Using equation 3:

$$\frac{(1{,}800\ \text{r/min})^3}{(2{,}000\ \text{r/min})^3} = \frac{23\ \text{A}}{\text{final motor current}}.$$

$$\text{Final motor current} = 31.5\ \text{A}.$$

Table 4–10 can be used to determine whether the electric motor will be overloaded with this increase in speed.

AXIAL FLOW FANS

Axial flow fans include those fans which produce motion of the air by the thrust effect of the inclined blades. The air enters axially at the leading edge of the blade, and the flow is essentially parallel to the impeller shaft. In addition, the air is given a rotating motion about the shaft axis as a center. Fans in this category are usually classified into tubeaxial, vaneaxial, and disk or propeller (fig. 4–15). Propeller fans are rarely used in cotton gins.

A tubeaxial fan consists of a relatively large hub with helical blades rotating within a cylinder, and will operate against resistance pressures of 2 or 3 inches of water. These are sometimes referred to in the ginning industry as clean-air or duct fans.

Vaneaxial fans consist of an axial flow impeller within a cylinder, combined with a set of guide vanes located either before or after the impeller. These guide vanes assist in recovering the energy imparted as tangential acceleration and, therefore, fans of this design are capable of operating against static pressures up to 6 or 7 inches of water.

Axial flow fans are sized by the diameter of the cylinder housing. The basic fan laws, which were discussed in connection with centrifugal fans, also apply to these fans. Performance curves can be used in the same manner as for centrifugal fans.

One of the distinguishing characteristics of axial flow fans is that they generally have a drooping horsepower curve, with *the horsepower being a maximum at no flow. This is the opposite of centrifugal fans, which have minimum horsepower at no flow.*

Unlike the centrifugal fan, axial flow fans cannot handle material through the fan impeller. They are used in cotton gins primarily on low-pressure systems such as lint-cleaner condensers and battery condensers. An access door should be provided in the air duct on both sides of the fan to facilitate inspection for lint fly buildup, especially on the fixed vanes.

Mechanical Conveyors

By D. M. Alberson

The mechanical conveyors used in cotton gins fall into three main categories: (1) belt conveyors, (2) screw conveyors, and (3) chain conveyors.

Belt conveyors, although formerly used in seed-cotton distributors, are now used primarily for conveying cottonseed from under the gin stands to a dropper discharging into a small-pipe pneumatic conveyor line. The principal advantage of using the belt conveyor under the gin stands is that it is self-cleaning. In installations ginning cotton for planting seed, use of the belt conveyor enables the ginner to keep seed varieties separated with a minimum of cleaning. The belt conveyor is efficient, requires relatively small horsepower, and has a high carrying capacity. A properly designed belt system has a long service life, and although the initial cost is usually high, installation is recommended where amortization of the initial cost is assured through reduced cleaning costs or for other reasons. Seed belt conveyor capacities are flexible because of the relatively high belt speeds permissible. An 8-inch belt running at a speed of 100 feet per minute in a 6-inch-deep trough will handle over 18 tons of seed per hour at 75-percent capacity.

Screw conveyors and screw lifts are the most common mechanical handling devices used in cotton ginning, being used to convey cottonseed, gin trash, and seed cotton. Screw conveyors are simple and relatively inexpensive but require more power than belt conveyors. The standard pitch screw has a pitch approximately equal to the diameter and is used on most horizontal installations and on inclines up to 20°. Horizontal screw conveyors are usually operated in a U-shaped trough with the screw supported at various standard spacings. Screw elevators are enclosed in cylindrical housings. The tube is operated full with no brackets used between ends. Screw elevators are normally used in the gin only to convey cottonseed. Concise formulas and data are not available for individual designs; however, the empirical equation given below can be used.

$$\text{Cubic feet per hour} = \frac{(D^2 - d^2)}{36.6} \times P \times \text{shaft revolutions per minute,}$$

where D=screw diameter (inch),
d=shaft diameter (inch),
and P=screw pitch (inch)—normally equal to D.

The actual capacity will be much less than the theoretical because of screw-housing clearance, fluid characteristics of material, screw length, material head, and lift. When specific operating data are not available, an estimate of 50 to 60 percent of the theoretical capacity should be used.

In some areas of the Cotton Belt, chain or scraper conveyors are used to elevate cottonseed from the seed pile into trucks for transfer to the mill. These scraper conveyors are similar to grain elevator conveyors; however, flights are normally shallow and have widths ranging from 12 to 18 inches. The capacity of such conveyors will depend on the incline needed. A rule of thumb for chain belt capacity is: horizontal, 115 percent of conveyor flight volume; 20° incline, 77 percent of flight volume; 30° incline, 55 percent of flight volume; and 40° incline, 33 percent of flight volume.

Theoretical horsepower requirements for flight conveyors can be determined by the following equation:

$$\text{Horsepower} = \frac{2_v L_c W_c F_c + Q\,(LF_m + H)}{33{,}000},$$

where v=speed of conveyor (feet per minute),
L_c=horizontal projected length of conveyor (feet),
W_c=weight of chain and flights (pounds per foot),
F_c=coefficient of friction for chains and flights,
Q=pounds of material to be handled per minute,
L=horizontal projected length of loaded conveyor (feet),
F_m=coefficient of friction for material,
and H=height of lift (feet).

The coefficients of friction range from approximately 0.25 for metal-to-metal contact to 0.50 for metal-to-wood contact. The materials coefficient of friction for cottonseed to metal is estimated to be approximately 0.80.

The power requirement of a screw conveyor is a function of its length, elevation, type of hangers, type of flights, internal resistance or viscosity of the material, coefficient of friction of the material on the flights and housing, and weight of the material. Consideration should also be given to the extra power required to start a full screw and to free a jammed screw. An approximation of the power required to operate a normal horizontal screw can be determined by the following equation.

$$\text{Horsepower} = CLWF/33{,}000,$$

where C=conveyor capacity (cubic feet per minute),
L=length of conveyor (feet),
W=bulk material weight (pounds per cubic foot) (cottonseed=25–30 pounds per cubic foot, average trash weight=10–12 pounds per cubic foot, seed cotton=4–6 pounds per cubic foot),
and F=material factor (cottonseed=0.9 and gin trash=0.9).

Screw conveyor size, capacity, and recom-

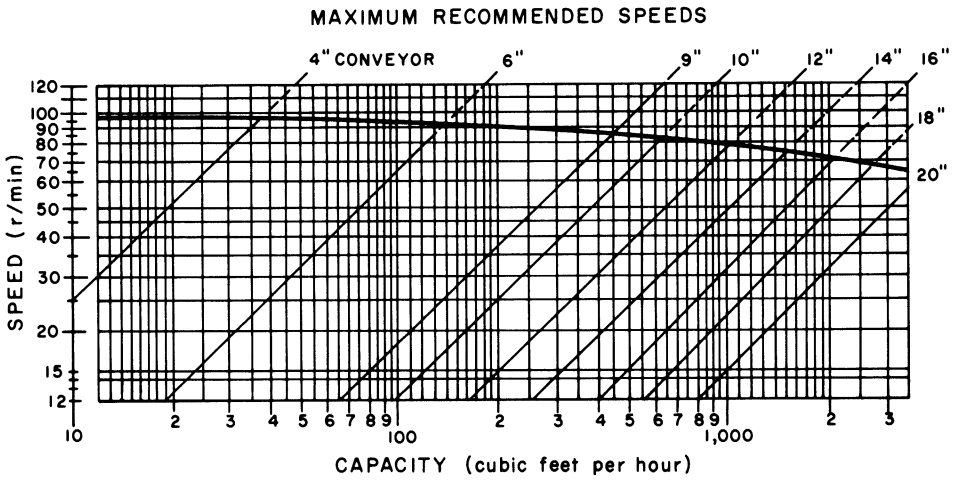

FIGURE 4–16.—Capacity of screw conveyors.

mended speeds for normal gin operations are given in figure 4–16.

Normally, a 16-inch, 5-horsepower unit is capable of loading 30 to 40 tons of cottonseed an hour into an average-height truck and trailer. Some provision should be made for raising and lowering the incline section to adjust to the height of the sideboards.

Materials handling is a highly specialized enterprise. Its procedures and details have developed largely from usage and experience in cotton gins. Large installations should be designed and installed by a materials-handling engineer. Smaller, less involved installations can be designed and installed by local mechanics or by plant supervisors and engineers.

Cottonseed Handling

By S. T. Rayburn, Jr., G. N. Franks, and C. S. Shaw

Seed at gins may be handled readily by gravity, belts, screw conveyors, or pneumatic piping. Belt and pneumatic conveying systems are self-cleaning, but screw conveyors must be hand-cleaned between the ginning of different varieties if the seed are to be segregated by variety. The use of belt or pneumatic conveyors is therefore desirable if any appreciable quantity of seed is to be saved for planting.

Where vertical lifts are employed, screw elevators are generally satisfactory. In some instances seed may be conveyed by belts or low-pressure piping. Conveying seed by air in small pipes is now the general practice (Bennett and Franks 1948).

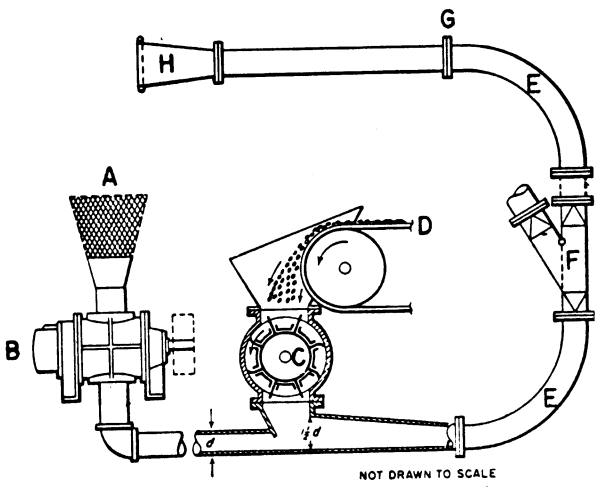

Figure 4–17.—Small-pipe system for conveying cottonseed, *A*, 16-mesh air filter, or screen box. *B*, Rotary positive-pressure blower. *C*, Dropper, or vacuum-wheel feeder, with eight or more shallow pockets. *D*, Gin-stand seed belt. *E*, Long-sweep, large-radius elbows. *F*, Valve for diverting seed to bin or storage. *G*, Six-bolt flange and rubber gasket. *H*, Funnel discharge for efficient delivery. (Diameter at *d* may be 4 to 8 inches.)

Small-pipe systems are economical to operate and relatively trouble-free. They enable the cotton producer and ginner to maintain pure varieties of cottonseed because the apparatus is self-cleaning. They have adequate capacity for moving as much as 500 pounds of seed per minute, as fast as the cotton is ginned. They may also be used for carrying seed to storage bins and for moving it later for grading, sterilizing, and other processes at rates to suit plant capacity. Cottonseed has been successfully handled by small-pipe blowing systems for distances up to 700 feet at operating costs lower than larger pipe and fan methods.

A small-pipe system is shown in figure 4–17. A self-cleaning seed belt is used to feed the system dropper that introduces the seed into the air pipe. A valve enables the operator to divert the seed to truck bin or to storage, and flanged piping and elbows provide the piping runs to points of delivery.

AIR-CONVEYING PRINCIPLES AND CALCULATIONS

Pipes 4 to 8 inches in diameter have proved large enough for handling cottonseed in gins and delinting plants. Table 4–11 gives the seed-handling capacity of such pipes.

For preliminary calculations to determine total resistance pressures that the pump must overcome, it is customary to allow 16 ounces of

Table 4–11.—*Cottonseed handling capacities of different diameter pipes*

Pipe diameter (inches)	Volume of air[1] (ft^3/min)	Capacity[2]		
		Lb/min	Tons/h	Bales/h
4	436	128	3.8	9.6
5	682	200	6.0	15.0
6	982	288	8.6	21.6
8	1,745	512	15.4	38.4

[1] Based on a velocity of 5,000 ft/min.
[2] Based on 800 lb of seed per bale.

resistance (or 1 pound per square inch) for each 200 linear feet of piping. In calculating, each short elbow and each valve must be considered equivalent to approximately 15 feet of straight pipe. For a more accurate estimate on which the factory can provide the blower unit and suggest its speed, the pressure losses for the individual elements that make up the system may be estimated as follows:

	Estimated pressure loss in ounces per square inch
4-inch piping, each 100 feet	6.0
5-inch piping, each 100 feet	5.0
6-inch piping, each 100 feet	3.0
8-inch piping, each 100 feet	2.0
For both 4- and 5-inch pipes:	
Elbows	.8
Base and tapered discharges from dropper	2.0
Cyclone collector and sacker at end of pipe	1.0
For both 6- and 8-inch pipes:	
Elbows	.5
Base and tapered discharges from dropper	2.0
Cyclone collector and sacker at end of pipe	1.0

Average air velocities in small seed pipes are in the range 4,200 to 5,200 feet per minute, with 5,000 feet per minute as the common figure. Air volumes of about 4 cubic feet per pound of cottonseed have been used in short piping systems with an air pump, but it is advisable to allow 5 cubic feet where pipe length exceeds 250 feet.

For horizontal blowing of cottonseed, the air velocity in the pipe should not be less than 4,000 feet per minute. No seed should pass through the blower.

BLOWERS

Since the operating air pressure range for small-pipe systems is usually 1 to 4 pounds per square inch, the two-lobe rotary air pump (fig. 4–18) is the type most commonly used; it is known in the trade as a positive-pressure blower. These blowers can purge the piping to overcome minor chokages by a temporary increase in air pressure.

Performance data for the rotary positive-pressure blowers now being used successfully at cotton gins and seed establishments are given in table 4–12.

A screened intake or air filter is imperative on cottonseed-handling blowers to protect the lobes and casing from excessive wear. Screened-intake filters may be either factory built or homemade. Large areas of close-mesh bronze screen wire are necessary for homemade intake filters; these filters should have at least 5 square feet of gross screen area, all accessible for daily or more frequent cleanings.

Relief valves are seldom used on positive-pressure blowers because they prevent purging the system at higher pressures when chokages threaten. If used, they should be set to pop off (release) at double the working pressures.

FEEDING SEED INTO PRESSURE PIPES

Cottonseed may be satisfactorily fed into a small-pipe pressure system by means of a dropper, or rotary sealed wheel (sometimes called a vacuum wheel), that mechanically drops the seed into the air line on the discharge side of the pump or blower. "Seed plugs" of the auger type have also been used successfully.

Speeds of the rotary sealed wheel, or dropper, should be relatively low—30 to 60 revolutions per minute—and internal seals at the ends and pocket divisions are necessary to prevent serious air leakage. It is customary to provide an independent drive for the hopper, because its speed is much slower than that of a rotary positive-pressure blower. A taper of 20 inches or more should be used on feeder base outlets or jet boxes to prevent chokage. Jet boxes must be set as close to the feeder as possible.

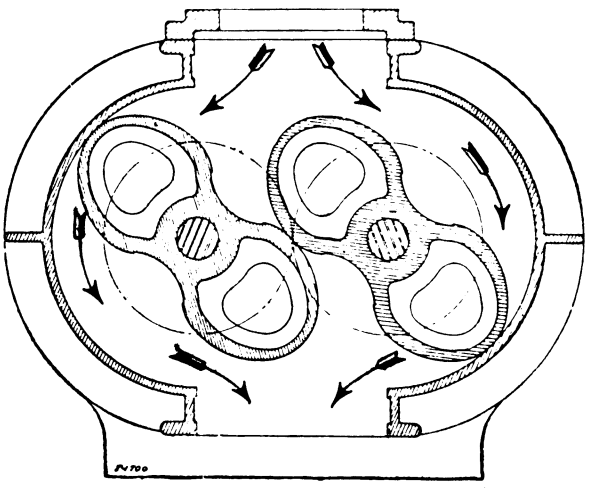

FIGURE 4–18.—Cross section of a typical positive-pressure two-lobe rotary air pump used for conveying cottonseed. Rotation may be reversed if desired.

TABLE 4–12.—*Performance data for rotary positive-pressure cottonseed blowers*[1]

Seed capacity (lb/min)	Size No.[2]	Pipe diameter (inches)	Speed (r/min)	Pressure[3] 1 lb/in²g Capacity (ft³/min)	1 lb/in²g Brake horsepower	2 lb/in²g Capacity (ft³/min)	2 lb/in²g Brake horsepower	3 lb/in²g Capacity (ft³/min)	3 lb/in²g Brake horsepower	3½ lb/in²g Capacity (ft³/min)	3½ lb/in²g Brake horsepower	4 lb/in²g Capacity (ft³/min)	4 lb/in²g Brake horsepower
Up to 100	615	4	575	292	1.9	256	3.5	228	5.2	217	6.0	–	–
			690	368	2.3	332	4.3	304	6.3	292	7.2	–	–
			1,080	626	3.6	590	6.7	562	9.7	550	11.2	–	–
Up to 175	717	5	575	555	3.2	511	6.1	478	8.9	464	10.4	–	–
			690	687	3.8	643	7.3	610	10.7	596	12.5	–	–
			925	956	5.2	912	9.7	879	14.4	866	16.9	–	–
Up to 250	717	6	1,200	1,275	6.4	1,225	12.8	–	–	1,175	21.8	–	–
			1,400	1,500	7.5	1,450	15.0	–	–	1,400	25.2	–	–
			1,620	1,750	9.0	1,650	17.0	–	–	1,600	29.1	–	–
Up to 500[4]	820	8	1,000	–	–	1,520	14.0	–	–	–	–	1,440	28.0
			1,200	–	–	1,680	17.0	–	–	–	–	1,600	34.0
			1,450	–	–	2,070	20.0	–	–	–	–	2,020	40.0

[1] Adapted from tables published by manufacturers.
[2] One of several trade designations.
[3] 4 ft³ of air per pound of seed may be allowed at 1 lb/in²g. At all higher pressures, allow 5 ft³.
[4] At maximum capacity operating at a velocity of 5,000 ft/min at a pressure of 2 lbf/in², limiting conveying distance will be 500 ft.

PIPING

Aluminum is the most commonly used piping material, but standard 20-gage galvanized pipe or galvanized lightweight tubing may be used where the piping is to be exposed to the weather. Joints should be flanged wherever seed passes through the pipe. Six-bolt companion flanges with rubber gaskets are recommended. On the blower intake and discharge, or at points ahead of the seed dropper, standard threaded pipe and fittings can be used for handling the compressed air.

Seed-handling elbows should be 18 gage or heavier and must be of the long sweep type to give satisfactory service without chokage. A 36-inch radius is recommended for pipes 4, 5, and 6 inches in diameter, and a 48-inch radius for pipes 8 inches in diameter.

Risers, or lifts, in seed piping should preferably be on an incline rather than vertical, both to keep the angles at elbows as large as possible and to save the piping length that diagonals afford in comparison with right-angle runs.

Pipe should not be allowed to slope downward in the direction of flow. Downward slopes may cause chokages.

VALVES, BRANCHES, AND DISCHARGES

Valves for small-pipe systems frequently give trouble in operation unless they are of good workmanship and are well fitted for tightness. Not more than two valves should be used in the ordinary cottonseed system, because leakage and careless adjustments invite trouble.

For lines containing vane-type seed valves, the takeoff angle should not exceed 30°. The deflector vane should be of adequate thickness and should be well fitted into the body of the valve, with the seated end adjusted to prevent seed chokage by lint or by seed build-up at the valve intake.

The discharge funnel (fig. 4–17, H) materially assists airflow through the pipe to open bins, but it should not be directed at a wall or any obstacle that might cause the seed to crack.

Cyclone collectors of seed for delivery to sackers may be used at the ends of small-pipe systems. The downspouts from these collectors should be 8 inches or more in diameter to prevent choking or bridging of seed at their bases.

OTHER FEATURES OF SMALL-PIPE SYSTEMS

Approximate distances for conveying cottonseed efficiently with small-pipe systems are 200 to 700 feet of piping. Since no two systems are exactly alike in length and number of risers and elbows, the limitations of pressure and volume peculiar to the type of blower must be carefully considered in the design of any small-pipe system.

Power cost is usually about half that of ordinary cotton-gin fan systems. Initial cost of small-pipe systems using positive-pressure blowers is somewhat lower than that of the gin fan system.

The efficiency of the small-pipe handling system depends on correct installation.

MEASURING EQUIPMENT

Most modern gins are equipped with devices for measuring cottonseed from each bale before or during its discharge into the conveying system. A common type of cottonseed measuring device consists of a pocket wheel that receives the seed from the gins and dumps automatically when each succeeding pocket of the wheel has received a specified amount of seed. Depending on the size of the unit, each 10 or 20 pounds of seed is measured as it is dumped, and the device can be equipped to signal the completion of each bale.

REFERENCE

Bennett, C. A., and Franks, G. N. 1948. Cottonseed handling with small air pipes. U.S. Dep. Agric. Circ. 768, 8 pp.

Cottonseed Aeration and Storage

By L. L. Smith and S. T. Rayburn, Jr.

Mechanical harvesting and modern high-capacity gins have increased the need for bulk storage of cottonseed. In recent years more and more emphasis has been placed on maintenance of cottonseed quality, for both planting and oil mill purposes. Aeration systems are now being made to engineering designs rather than by trial and error, helping to reduce seed losses. Properly designed aeration systems help prevent free fatty acid formation and maintain initial seed viability. With improved system de-

signs, selection of proper equipment, and good operating procedures, cottonseed quality can be maintained efficiently and effectively.

STORAGE

Most of the cottonseed from the ginning process goes into storage either for oil mill processing or for planting. A small amount will be returned to the farm for cattle feed. Approximately 5 million tons of cottonseed were produced in the United States in 1973, of which about 4 percent (197,600 tons) was stored and processed for planting. The remainder was used primarily in the milling industry. Storage methods are similar for preserving quality for either purpose. Proper aeration is the key to minimizing storage losses and quality deterioration. Storage methods vary in different geographic areas.

Mechanically harvested cotton when ginned may have a seed moisture content (wet basis) as low as 6 percent and as high as 18 percent, with the majority within the range of 10 to 15 percent. These moisture contents, in most storage areas, present no problems for safe storage with proper aeration and cooling. However, cottonseed for planting purposes should not go into storage with a moisture content above 12 percent.

The highest moisture content in seed will usually occur at the beginning of the harvest season. Most ginners and storage warehousemen, at the beginning of the season, will exercise their prerogative of sending this high-moisture seed to the oil mill. The drier seed will go into storage for planting-seed processing later in the year.

Most present-day cottonseed storages have moisture-proof concrete floors. The structural framing may be either wood or steel, with the outside clad with sheet steel. Some planting-seed storages may have walls faced on the inside. Facing gives some protection from extreme temperature changes that may occur in steel-clad buildings. However, cottonseed is a good insulator and wide temperature changes occur only in a relatively thin layer along the walls.

Cottonseed storage capacities may range from 400 to several thousand tons. In computing storage capacity, a density of 80 cubic feet per ton is used for seed depths of 24 feet or less. A density of 75 cubic feet per ton is used for depths of 24 to 50 feet. For depths of 50 feet or more, a density of 70 cubic feet per ton is used. Table 4–13 gives the capacities of shallow, flat storages with depths to 24 feet, commonly used for planting seed.

Calculating the capacities of Muskogee-type (deep, peaked) storages is more complicated than calculating for shallow, flat storages. Following is an equation for computing the approximate capacities of Muskogee-type storages using the assumptions given:

1. All roof slopes are 45°.
2. Head house is 10 feet wide.
3. Any space lost to aeration system, filling and unloading systems (tunnel etc.) and internal building structural losses is disregarded.
4. House is filled to the roof.
5. All dimensions are inside building.
6. Density is 70 cubic feet per ton for tightly packed seed over 50 feet deep.

Calculate as follows:

$$\text{Volume in ft}^3 = WL(S+H) - H^2(L+W-1.333H),$$

$$\text{Capacity in tons} = \frac{\text{volume in ft}^3}{70\ \text{ft}^3/\text{ton}},$$

where S=sidewall depth (feet),
H=maximum depth of seed less depth of sidewall (feet),
L=length of storage (feet),
and W=width of storage (feet).

AERATION AND COOLING

One difficulty encountered in the past in designing aeration systems for moving small amounts of air through stored cottonseed was the lack of information on the resistance that cottonseed offers to air flowing through it. Research in recent years has established some values for static pressure losses or resistance to airflow by cottonseed at depths of 10 to 80 feet and airflow rates of 2 to 20 cubic feet per minute per ton of seed. Table 4–14 gives some comparative values for three depths and three airflow rates and the resulting static pressures and approximate horsepower requirements. Additional static pressure values and horsepower requirements at various depths are given in USDA Marketing Research Report No. 1020, "Aeration of Cottonseed in Storage."

An airflow rate not less than 10 cubic feet per minute per ton is recommended for cotton planting seed. At this rate, cottonseed having 12 percent moisture can be cooled sufficiently with ambient air to maintain seed quality.

Many certified seed producers use an airflow rate of 15 cubic feet per minute per ton. However, at this rate, the static pressure is approximately 65 percent greater and the horsepower requirement increases by about 140 percent over that for 10 cubic feet per minute per ton. Research results indicate that 10 cubic feet per minute per ton is sufficient to cool cottonseed to not less than 50° F, as recommended for planting seed.

In large Muskogee-type storages for oil mill processing, the depth of the cottonseed usually is a limiting factor in the amount of air that can be moved economically. For example, with cottonseed 80 feet deep and an airflow rate of 2 cubic feet per minute per ton, the static

TABLE 4–13.—*Capacities of flat cottonseed storages*

Inside width (feet)	Capacity per linear foot (tons)	Average depth of seed (feet)	Capacity in tons when length of house in feet is—						
			80	100	120	140	160	180	200
30	4.50	12	360	450	540	630	720	810	900
	5.25	14	420	525	630	735	840	945	1,050
	6.00	16	480	600	720	840	960	1,080	1,200
	6.75	18	540	675	810	945	1,080	1,215	1,350
	7.50	20	600	750	900	1,050	1,200	1,350	1,500
	8.25	22	660	825	990	1,155	1,320	1,485	1,650
	9.00	24	720	900	1,080	1,260	1,440	1,620	1,800
36	5.40	12	432	540	648	756	864	972	1,080
	6.30	14	504	630	756	882	1,008	1,134	1,260
	7.20	16	576	720	864	1,008	1,152	1,296	1,440
	8.10	18	648	810	972	1,134	1,296	1,458	1,620
	9.00	20	720	900	1,080	1,260	1,440	1,620	1,800
	9.90	22	792	990	1,188	1,386	1,584	1,782	1,980
	10.80	24	864	1,080	1,296	1,512	1,728	1,944	2,160
40	6.00	12	480	600	720	840	960	1,080	1,200
	7.00	14	560	700	840	980	1,120	1,260	1,400
	8.00	16	640	800	960	1,120	1,280	1,440	1,600
	9.00	18	720	900	1,080	1,260	1,440	1,620	1,800
	10.00	20	800	1,000	1,200	1,400	1,600	1,800	2,000
	11.00	22	880	1,100	1,320	1,540	1,760	1,980	2,200
	12.00	24	960	1,200	1,440	1,680	1,920	2,160	2,400
45	6.75	12	540	675	810	945	1,080	1,215	1,350
	7.87	14	630	787	945	1,102	1,260	1,417	1,575
	9.00	16	720	900	1,080	1,260	1,440	1,620	1,800
	10.12	18	810	1,012	1,215	1,417	1,620	1,822	2,025
	11.25	20	900	1,125	1,350	1,575	1,800	2,025	2,250
	12.37	22	900	1,237	1,485	1,732	1,980	2,227	2,475
	13.50	24	1,080	1,350	1,620	1,890	2,160	2,430	2,700
50	7.50	12	600	750	900	1,050	1,200	1,350	1,500
	8.75	14	700	875	1,050	1,225	1,400	1,575	1,750
	10.00	16	800	1,000	1,200	1,400	1,600	1,800	2,000
	11.25	18	900	1,125	1,350	1,575	1,800	2,025	2,250
	12.50	20	1,000	1,250	1,500	1,750	2,000	2,250	2,500
	13.75	22	1,100	1,375	1,650	1,925	2,200	2,475	2,750
	15.00	24	1,200	1,500	1,800	2,100	2,400	2,700	3,000
60	9.00	12	720	900	1,080	1,260	1,440	1,620	1,800
	10.50	14	840	1,050	1,260	1,470	1,680	1,890	2,100
	12.00	16	960	1,200	1,440	1,680	1,920	2,160	2,400
	13.50	18	1,080	1,350	1,620	1,890	2,160	2,430	2,700
	15.00	20	1,200	1,500	1,800	2,100	2,400	2,700	3,000
	16.50	22	1,320	1,650	1,980	2,310	2,640	2,970	3,300
	18.00	24	1,440	1,800	2,160	2,520	2,880	3,240	3,600

pressure is approximately 20 inches (water gage), as given in figure 4–19. Research results also indicate that this airflow rate is sufficient to cool cottonseed 80 feet deep to temperatures of 40° to 45° F by late December or January.

Usually no additional aeration is necessary once the seed has been cooled to the desired temperature. Even so, seed temperatures should be monitored throughout the storage period, especially in planting seed, since hot spots occasionally develop. Usually a few hours of additional aeration will remove the heat from the trouble spot, provided it is discovered promptly.

Many planting-seed storages use commercially available systems for monitoring temperatures of stored cottonseed. Systems using thermocouples are probably the most common. Thermocouple cables can usually be fastened to some part of the roof or truss structure and suspended to near the floor. A breakaway cable hanger is recommended to prevent structural damage to the building in case of excessive force on the cable caused by seed settling. The sensing points in each cable may be spaced 3, 4, or 5 feet apart, depending on the depth of seed and the number of sensing points desired. The distance between horizontal cables is optional, but is usually 20 feet in each direction lengthwise and crosswise of the storage.

Measuring temperatures in deep-stored cottonseed is much more difficult. Thermocouple cables are sometimes used by placing them in the cottonseed horizontally during the filling process; these cables will tend to shift with the seed and make it difficult to determine where the sensing points are located. Another common method is to drive a pipe or heavy conduit vertically into the cottonseed at selected locations and hang mercury thermometers, tied to a heavy cord at desired intervals, inside the pipe or conduit. When temperature readings are needed, the cord is rapidly removed from the pipe and each thermometer read as it is removed. When all thermometers have been read and the temperatures recorded, the thermometers are returned to place and left until the next reading time. This method will give a reasonable estimate of the temperatures in the seed surrounding the pipes.

Aeration system designs fall into two general types, manifold and central duct. The manifold system has several aeration ducts spaced on the floor and connected to a fan. This type of system makes it possible to select sections or combinations of sections of the storage to be aerated at any one time, since each aeration duct is provided with a gate or slide valve that can be opened or closed as needed. The central-duct system has one or two large aeration ducts in or near the center of the storage, lengthwise of the building. A supply pipe from the center of the central duct connects to a fan outside the building. In most central-duct systems, the unloading tunnel is covered with perforated metal or some other material that will enable

TABLE 4–14.—*Resistance of cottonseed to airflow at specified rates of flow and depth of seed in level storage*

Depth of cottonseed (feet)	Airflow rate (ft^3/min/ton)	Static pressure (inH_2O)	Horsepower required per 1,000 tons
20	5	2.8	3.5
	10	6.4	19.0
	15	10.6	43.0
30	5	6.5	10.0
	10	15.8	42.5
	15	26.5	100.0
40	5	12.3	17.0
	10	30.5	86.0
	15	52.5	210.0

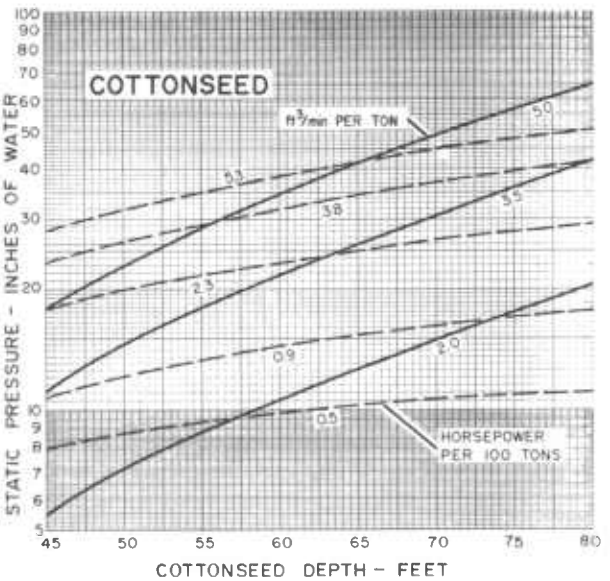

FIGURE 4–19.—Fan horsepower and static pressure requirements for aerating cottonseed at three airflow rates at depths ranging from 45 to 80 feet.

it to serve as part of the aeration duct. With this type of system, aeration may be restricted to that time when the tunnel is covered with cottonseed. Additional aeration ceases once the tunnel is uncovered for moving seed out of the storage.

DESIGN OF AERATION SYSTEMS

Most aeration systems have these principal parts: (1) one or more fans to supply the required volume of air at a specified static pressure, (2) ducts to move the air into or out of the cottonseed, (3) supply pipes to connect the fans and ducts, and (4) a motor to drive the fan.

The primary factors that influence design of a system and selection of aeration equipment are (1) the size and type of structure in which the system is to be installed, (2) the depth of cottonseed through which the air will be moved, (3) the airflow rate per cubic foot (or per ton) to be provided, and (4) the quantity of seed to be served by each fan.

After these points have been settled, the following may be determined: (1) total air volume to be supplied, (2) the static pressure against which the fan must operate, (3) the type and size of fans and motors, and (4) the type and size of aeration ducts and supply pipes.

Most aeration systems are designed with the airflow downward through the cottonseed. Downward airflow eliminates moisture condensation and accumulation in the top layers of cottonseed, which can occur when warm, moist air moves upward into the cold top layers of seed. Downward airflow also counteracts any convectional air movement that might take place. In addition, temperature and odor of the exhaust air from the fan can give some indication of seed quality to the experienced warehouse operator.

Airflow rates used herein are based on research reported in USDA Marketing Research Report No. 1020. In designing an aeration system it should be recognized that uniformity of airflow is impossible to achieve in most aerated storages, especially in Muskogee-type or peak-loaded storages where seed depths may vary from 10 feet at the sidewalls to 100 feet or more at the peak of the mass. Since air moves along the path of least resistance, the ducting should be so designed to equalize the air paths as nearly as possible and to assure

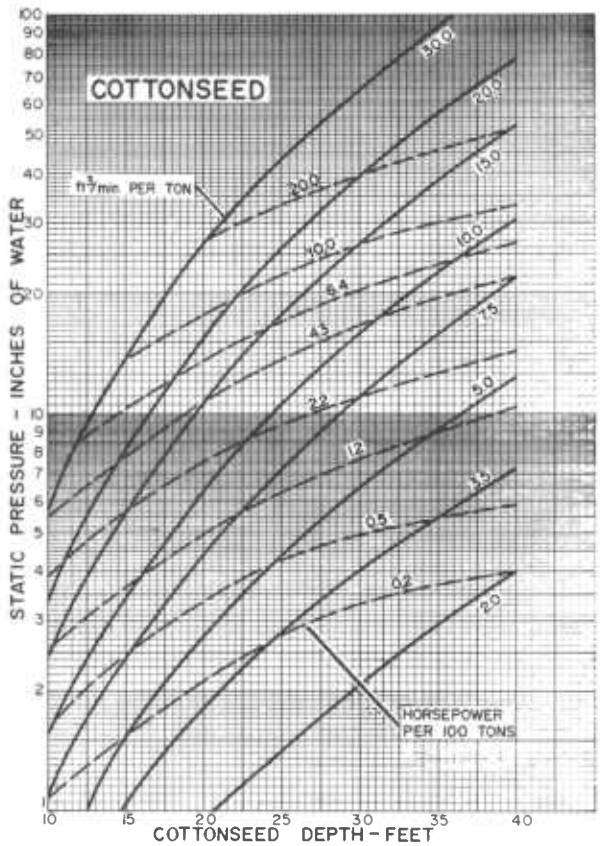

FIGURE 4–20.—Fan horsepower and static pressure requirements for aerating cottonseed at various airflow rates and at cottonseed depths from 10 to 40 feet.

at least the desired airflow through the seed at all locations.

The following design criteria are used in selecting the aeration ducts, supply pipes, fan sizes, and motor sizes. To determine the required aeration-duct surface area, a velocity of 10 to 20 feet per minute at the duct surface is assumed. To calculate supply-pipe sizes, an air velocity of 1,500 to 2,000 feet per minute is used, except that a velocity of 2,500 feet per minute is permissible in short pipes (5 to 10 feet in length). Fan sizes are determined by the total amount of air each fan is to deliver and the static pressure, depending on the airflow rate and depth of seed (figs. 4–19 and 4–20). The approximate horsepower required for each fan can also be estimated from figures 4–19 and 4–20, once the airflow rate and cottonseed depth are known. Fan manufacturers' capacity tables will give the horsepower required for their fans under specific conditions.

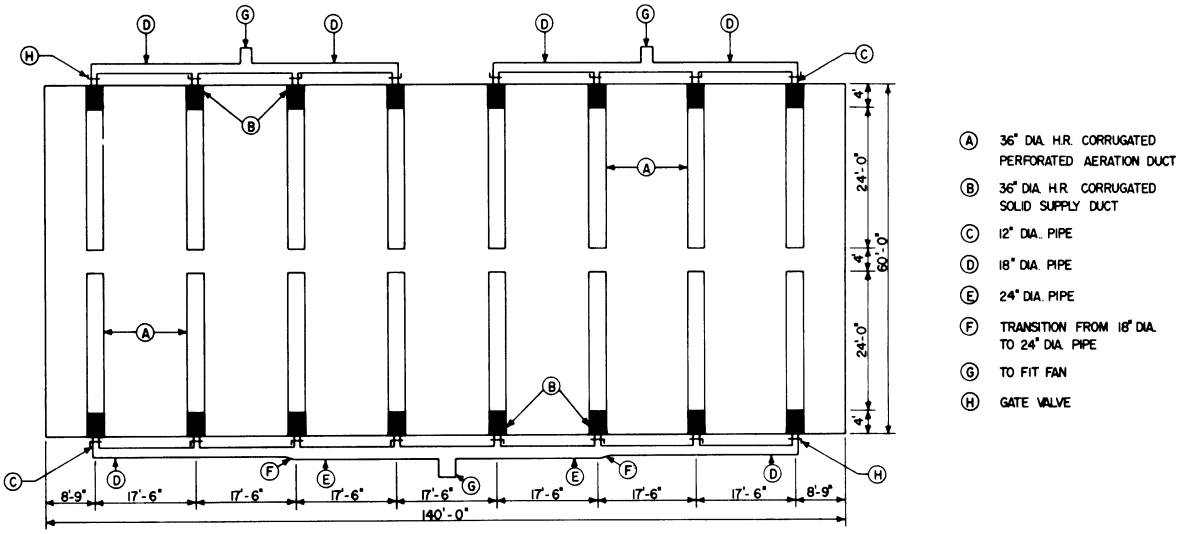

FIGURE 4–21.—Plan view of aeration layout in a flat storage.

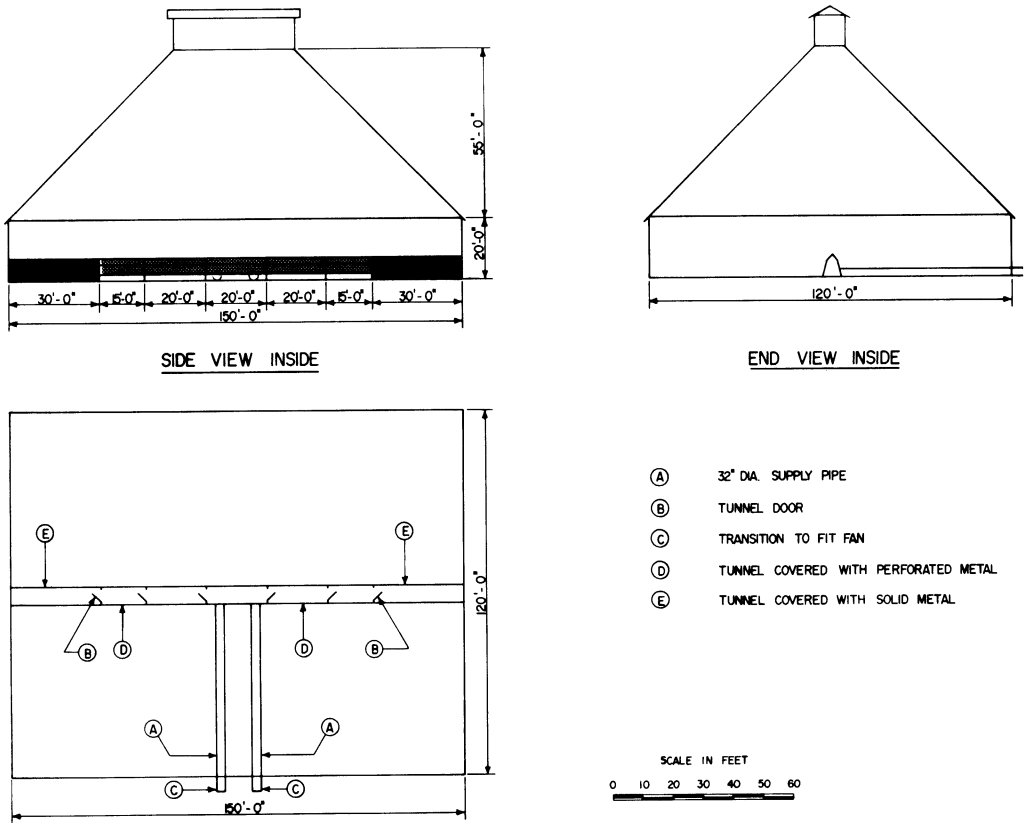

FIGURE 4–22.—Aeration layout of a Muskogee-type, or peak-loaded, storage.

For example, figure 4–21 is a flat storage for planting seed, 60 feet wide and 140 feet long, with cottonseed 16 feet deep. The capacity of this storage is 1,680 tons at density of 80 cubic feet per ton. Using a design airflow rate of 10 cubic feet per minute per ton, the total volume of air required is 16,800 cubic feet per minute. The amount of aeration-duct surface area required, using an air velocity at the duct surface of 10 feet per minute, is 1,680 square feet. Any combination of duct diameters and lengths that provides this amount of area would be satisfactory. The distance between ducts on the floor should not be greater than 1½ times the cottonseed depth. In this storage 36-inch-diameter, half-round, perforated, corrugated ducts were selected. All ducts are 24 feet long and spaced 17.5 feet apart on the floor (fig. 4–21).

With this system, either two or four fans manifolded on each side of the building may be used. Using two fans, each is required to deliver 8,400 cubic feet per minute. The static pressure against which the fans must operate, determined from figure 4–20, for a depth of 16 feet at an airflow of 10 cubic feet per minute per ton is approximately 3.9 inches (water gage). The horsepower required (fig. 4–20) is approximately 1.2 per 100 tons, or 10 horsepower per fan using two fans. Whether using two or four fans, the static pressure that the fans will operate against is the same—3.9 inches (water gage). Using four fans, each fan will be required to deliver only one-half the volume required when using two fans.

In designing an aeration system for a Muskogee-type or peak-loaded storage, the same calculations are used as for the flat storage. Figure 4–22 illustrates a storage 120 by 150 feet, with 20-foot sidewalls and cottonseed to a maximum depth of 75 feet. The capacity of this storage is approximately 11,000 tons, calculated as above. Because of the cottonseed depth and the static pressures and horsepower requirements, the system in this storage is designed to deliver 2 cubic feet per minute per ton. The total required volume of air is 22,000 cubic feet per minute at a static pressure of approximately 17.5 inches (water gage) (fig. 4–19). One or two fans may be used; two are used in this design. Each fan is required to deliver 11,000 cubic feet per minute at 17.5 inches (water gage) of pressure and will require approximately 50 horsepower. The center 90 feet of the unloading tunnel is used as the aeration duct. This part of the tunnel is covered with perforated or expanded metal to allow airflow through it. Tunnel doors provide for starting aeration as soon as the center portion of the tunnel is covered with seed. Thirty feet on either end of the tunnel are sealed against any air movement to eliminate short-circuiting of the air through the shallow seed directly over the tunnel near the outside wall.

TYPES OF FANS

The most commonly used fans for aerating cottonseed are of the centrifugal (radial flow) type. Propeller (axial flow) fans may be used where the static pressure is not more than 3 or 4 inches (water gage). Centrifugal fans must be used to aerate deep storages.

Three types of centrifugal fans are shown in figure 4–23. The forward-curve fan has a large number of blades and operates at relatively low speed. One disadvantage of this fan is that the motor may be overloaded if the static pressure is decreased, causing an increase in air delivery; it is not commonly used for aerating cottonseed when the motor load will vary considerably between the beginning of the season, with a partially filled storage, and the end of the season, when the storage is full.

The backward-curve centrifugal fan is a high-speed fan that usually has 12 blades. It is slightly more efficient than a forward-curve or straight-blade fan. One of its advantages is a self-limiting horsepower characteristic; when used near the point of maximum efficiency with a motor of adequate size, there is no danger of motor overload.

A centrifugal fan with straight blades, sometimes called a pressure fan, or, more commonly, an industrial exhauster, is widely used in aerating cottonseed. It has some overloading characteristics when the static pressure is reduced, but will not overload as much as a forward-curve fan. A slide gate or damper placed in the supply pipe leading to the fan can be adjusted to maintain a relatively constant static pressure on this fan, as the amount of cottonseed varies.

Three types of axial flow fans are shown in figure 4–15. Basically, they are low-pressure fans, but certain designs are suitable for up to medium-pressure operation.

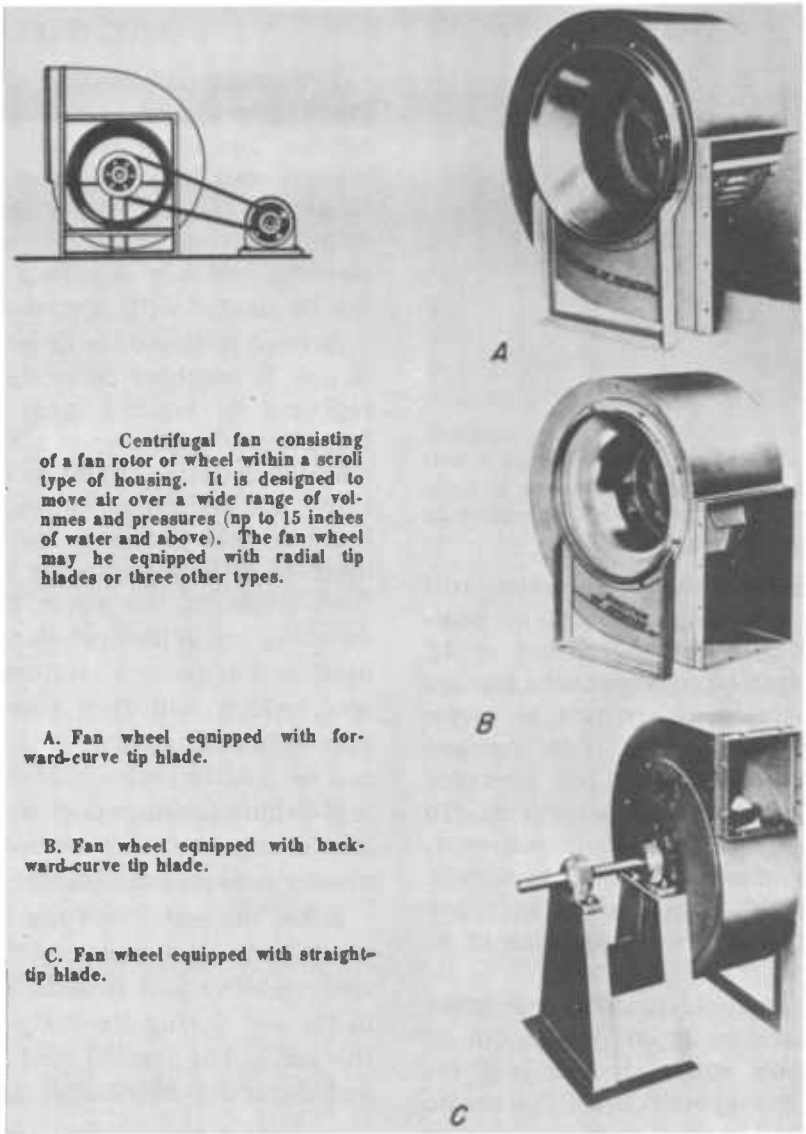

PN-5242

FIGURE 4-23.—Centrifugal fans showing various type wheels.

The centaxial fan (fig. 4–24), relatively new in design, is being used in some of the latest aeration systems. The combination design has the characteristics of both the basic axial and centrifugal fans. The housing is cylindrical with a venturi inlet and guide vanes at the discharge. The impeller has airfoil blades that combine the characteristics of the airfoil propeller fan and the back-curved centrifugal fan. It has a low noise level and is nonoverloading. This fan offers the installation simplicity of an axial flow design and the performance of the centrifugal. Its efficiency is very good, and it will perform in pressure ranges of up to 17 inches (water gage) at relatively low speeds.

Fans should be selected on the basis of performance ratings supplied by the manufacturers. A performance rating specifies the volume of air delivered by the fan at various static pressures. Reliable performance ratings are assured if the fans have been rated in accordance with the testing code of the Air Moving and Conditioning Association.

HANDLING PLANTING COTTONSEED

Cottonseed to be used for planting requires some additional consideration during storage.

PN-5243

FIGURE 4-24.—Centaxial fan with airfoil blades. It will move air through a wide range of volume at pressures up to 16 inches of water while operating at relatively low speeds.

Seed from mechanically harvested cotton will usually go into bulk storage without any additional cleaning at a moisture content of 12 percent or less. It may be conveyed into storage by mechanical methods with a belt or screw conveyor or pneumatic system. Less damage will occur to the cottonseed in a belt conveyor than in either of the other two methods. To minimize seed damage in a pneumatic conveyor, all interior pipe surfaces should be as smooth as possible. Impact damage can be kept low by making all pipe turns with a radius of at least 4 feet.

The nonflowing characteristics of cottonseed causes a major problem in moving it out of storage. Considerable hand labor in conjunction with portable conveyors is used. Pneumatic removal is being used in some storages. In most of these cases, however, the size and weight of the suction pipes are so great that very little if any reduction in labor is realized.

TREATING AND DELINTING COTTONSEED

Processing and treating of planting seed will start after the harvest season, usually in December. The cottonseed will be moved from the storage and into the processing plant where it will be cleaned. After cleaning, it may be delinted by one of several processes. The best planting methods require a delinted seed that can be planted with precision accuracy.

Several methods for delinting cottonseed are in use. In machine delinting, the cottonseed is reginned to remove some additional linters from the original ginned cottonseed. Following machine delinting, flame delinting may be used to remove additional linters and fuzziness and helps to make the seeds flow more easily. Close machine delinting removes more of the linters than either of the above two methods. Acid delinting has gained popularity in recent years, because it removes all linters, leaving the black seed, which will flow like grain. The most precise planting control in existing planters can be obtained with acid-delinted seed. Since acid-delinted seed cannot be stored as long as seed delinted by other methods, acid delinting is usually done as near planting time as possible.

After the cottonseed has been delinted, it is treated with the necessary chemicals to protect seed viability and to reduce bacterial activity in the soil during the early growing stages of the plant. The treated seed is bagged, labeled, and stored for distribution and sale. Because of the controls and precautions necessary in the treatment and delinting processes, most planting seed is processed in commercial seed facilities.

Collection and Disposal of Gin Waste

By OLIVER L. MCCASKILL, R. V. BAKER, and R. A. WESLEY

In the research program of the U.S. Department of Agriculture, an effort is made to anticipate the future needs of the ginning industry. Currently, one of the most pressing needs is for air-pollution abatement equipment for waste collection and disposal. This need has been in the forefront since the passage of the Federal Clean Air Act of 1970.

At most gin plants, the only pollutant emitted into the atmosphere is particulate matter, either exhausted directly into the atmosphere or escaping from some type of abatement equipment. Additional pollutants in the form of smoke and fly ash are emitted from gin plants that incinerate the collected waste material. At the present time, all cotton-producing States are operating under some form of process-weight standard having an allowable emission level based on the total weight of material being processed.

The actual levels of gin emissions vary, depending on the time and method of harvest. During the 1973–74 cotton-harvesting season, 63 percent of the crop was machine-picked and 36 percent was machine-stripped. The amount of foreign matter removed by gin equipment is quite variable, ranging from an average low of 107 pounds per bale for hand-picked cotton to an average high of 740 pounds per bale for machine-stripped cotton (table 4–15).

The conveying systems in modern cotton gins are predominantly pneumatic and require large volumes of air to move the cotton through the processing sequence. A gin with a capacity of 12 to 15 bales per hour requires approximately 100,000 cubic feet of air per minute to operate properly. Trash removed from the seed cotton by the gin's cleaning equipment is usually carried out of the gin by these pneumatic systems.

The ginner's waste problem is twofold. First, he must collect the material, and second, he must dispose of it. Both operations must be performed without causing excessive air pollution.

HIGH-EFFICIENCY CYCLONES

Cyclones, the most widely used collection equipment on high-pressure discharges, collect the bulk of the waste being discharged. Cyclones are used extensively because they are effective, inexpensive, and require little maintenance. They are essentially cylindrical, with a long,

TABLE 4–15.—*Average weight of foreign matter removed during ginning a 500-pound bale (gross weight) from cotton harvested by various methods*

	Method of harvest			
	Hand-picked	Machine-picked	Machine-stripped	Hand-snapped
Percentage of crop[1]	<0.5	63	36	<0.5
Av. waste weight, lb[2]	107	203	740	615

[1] Percentages from "Charges for Ginning Cotton, Costs of Selected Services Incident to Marketing, and Related Information, Season 1973–74," U.S. Dep. Agric., Econ. Res. Serv. [Rep.] ERS–2, August 1974.

[2] Averages calculated from seed-cotton weights, using the seed-lint ratio furnished by cotton breeders and correcting it for 3 percent seed-cotton moisture removal during ginning. Weighted waste averaged for the crop: 322 pounds per bale.

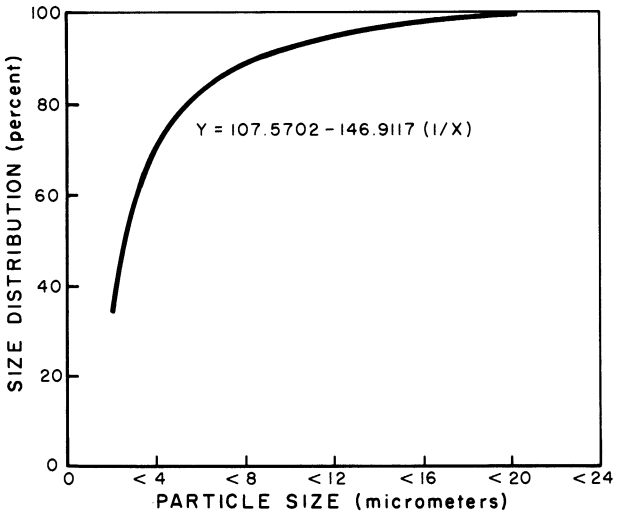

FIGURE 4–25.—Percentage of various sizes of gin trash particles emitted from exhaust of a small-diameter cyclone.

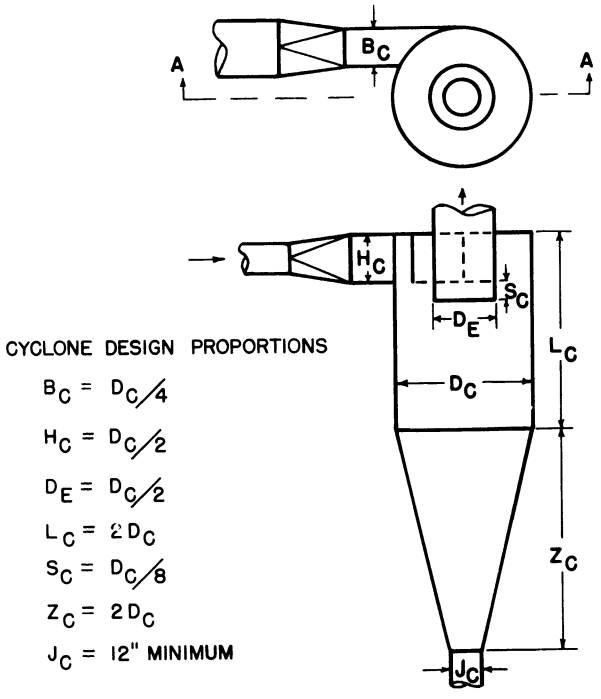

FIGURE 4–26.—Relative dimensions for a small-diameter design cyclone.

conical hopper bottom and a center cylinder through which the air escapes. The trash-laden air enters tangentially near the top. Centrifugal force caused by the whirling action of the trash and air pushes the trash outward and into the conical hopper below. The air passes up and out through the center cylinder.

A properly sized high-efficiency cyclone collects 99.9 percent of the total trash introduced and virtually 100 percent of the trash that is larger than 30 micrometers in diameter (fig. 4–25) (Wesley et al. 1972).

Cyclone size and arrangement depend on several variables, the most important of which is the volume of air to be handled. This can be measured by the use of a pitot tube and manometer. In general, low-volume fans require only a single cyclone installation; however, as air volume is increased, two to four parallel-mounted cyclones are required to insure high efficiency and keep the sizes within practical limits. A diameter of 34 inches is considered optimum. Figure 4–26 illustrates relative dimensions for small-diameter cyclone designs. Table 4–16 is a guide to the selection of cyclone size and arrangement based on air volume, and figures 4–27, 4–28, and 4–29 illustrate typical cyclone arrangements.

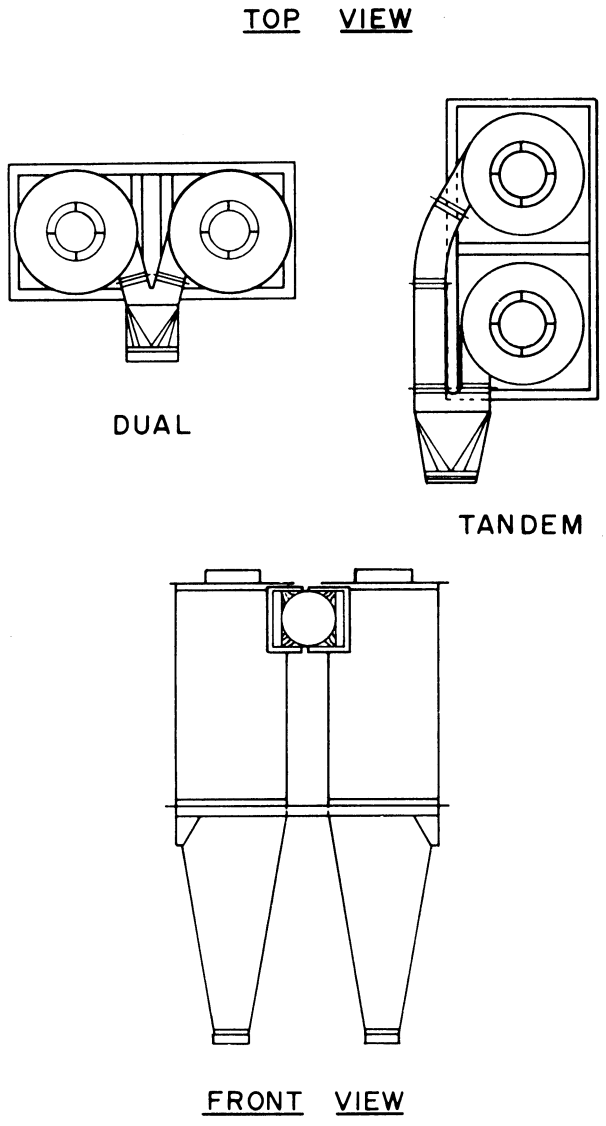

FIGURE 4–27.—Double cyclone arrangement.

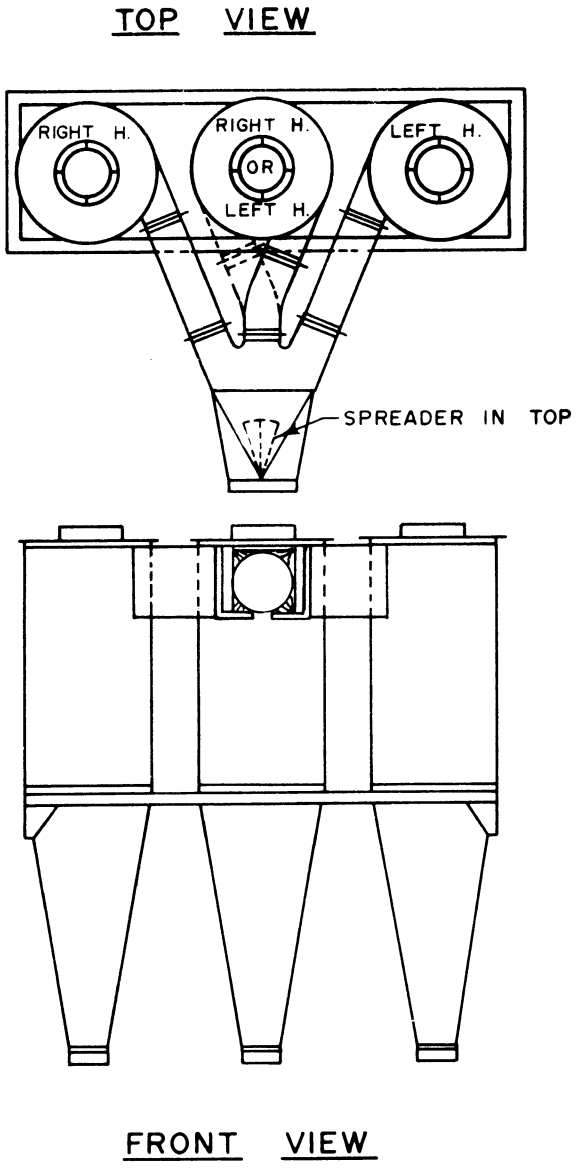

FIGURE 4–28.—Triple cyclone arrangement.

The pressure resistance the fan is capable of overcoming is another important item in cyclone sizing. A minimum inlet air velocity of 3,000 feet per minute is recommended for efficient removal of the trash and dust. The calculated pressure drop in cyclones designed for an inlet air velocity of 3,000 feet per minute is 4.3 inches of water, which is within the normal operational limits of straight-blade centrifugal fans.

Figure 4–30 shows the optimum velocity range for operating cyclone collectors and gives approximate sizes required for various applications. Selection should be made from this graph between the dotted lines to provide a good compromise of collecting efficiency to horsepower load or pressure drop. These limits are from 3 to 5 inches of pressure as measured on the water gage and correspond to the recommended inlet velocities of 3,000 feet per minute.

Space and height limitations will be factors in choosing a multiple mount. A 4-foot-diameter cyclone will be a minimum of 17 feet high (8-foot body, 8-foot cone and at least 1 foot for the clean-air exit pipe), whereas a 2-foot-diameter cyclone will only be 9 feet high.

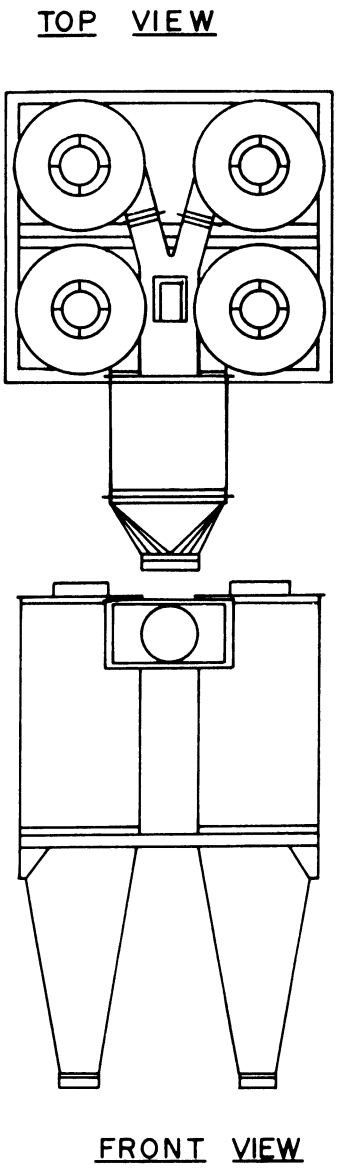

FIGURE 4–29.—Quadruple cyclone arrangement.

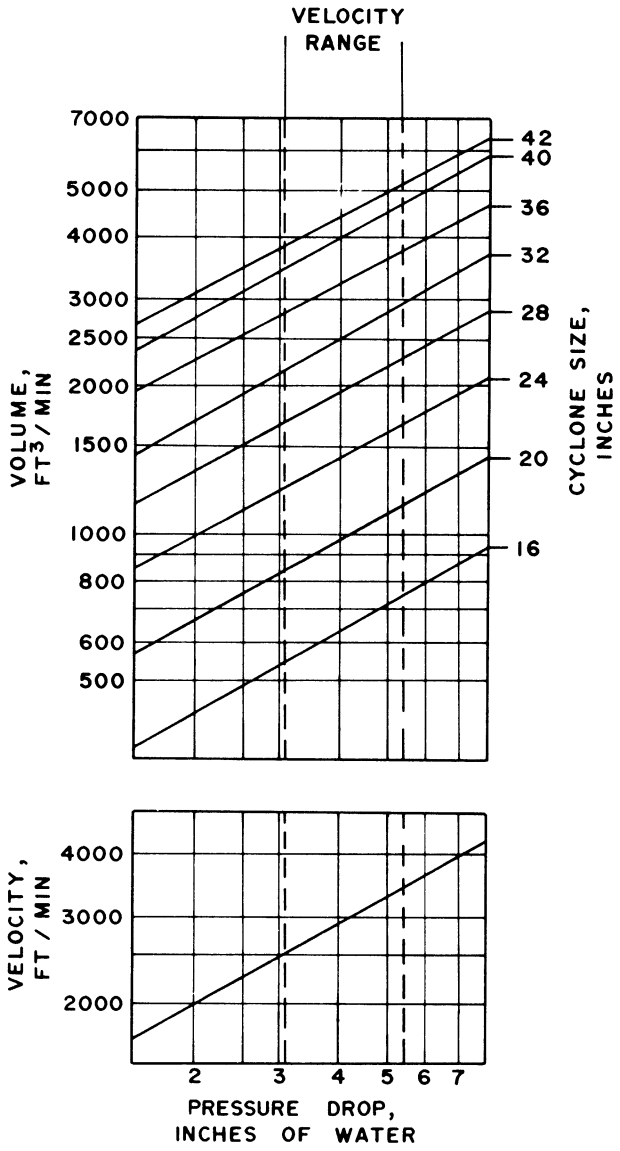

FIGURE 4–30.—Small-diameter cyclone selection chart.

TABLE 4–16.—*Cyclone sizing and arrangements recommended for average ginning conditions*

Air volume (ft^3/min)	Single		Double		Triple		Quadruple	
	Diameter, D_c (inches)	Approximate height (feet)	Diameter, D_c (inches)	Approximate height (feet)	Diameter, D_c (inches)	Approximate height (feet)	Diameter, D_c (inches)	Approximate height (feet)
1,500	24	9	...	...	...	...	...	...
2,000	28	10	20	8	...	...	...	...
2,500	31	11	22	8	...	...	...	...
3,000	34	12	24	9	20	8	...	...
4,000	40	14	28	10	23	8	20	8
5,000	44	16	31	11	26	10	22	8
6,000	48	17	34	12	28	10	24	9
7,000	...	...	37	13	30	11	26	10
8,000	...	...	40	14	32	12	28	10
9,000	...	...	42	15	34	12	29	11
10,000	...	...	44	16	36	13	31	11
11,000	...	...	46	16	38	14	32	12
12,000	...	...	48	17	40	14	34	12
14,000	...	...	...	...	42	15	...	...
16,000	...	...	...	...	45	16	40	14
18,000	...	...	...	...	48	17	42	15
20,000	...	...	...	...	...	...	44	16
22,000	...	...	...	...	...	...	46	16
24,000	...	...	...	...	...	...	48	17

For cyclones discharging into screw conveyors, care should be taken to provide sufficient conveyor size and speed to prevent stoppages. Conveyors mounted beneath trash-collecting cyclones should be equipped with a hopper to accommodate temporary overloads.

Since the splitter inlet transition on multiple-cyclone arrangements is a potential source of trouble, a single cyclone should be used on each lint-cleaner waste fan whenever possible. If the cyclones discharge into a screw conveyor, the lint-cleaner waste cyclone should be located near the outlet end of the conveyor to minimize conveyor chokage.

INLINE FILTERS

Inline filters were developed specifically for controlling fly lint and dust emissions from condenser exhausts. Three designs of inline filters are available (figs. 4–31 and 4–32). In one of these, the stationary-screen design, a fixed filtering screen is mounted in an arc to match a rotating brush reel. In another, the filtering screen covers a revolving drum, which is cleaned by a rotating brush cylinder located near the bottom of the drum. In the third design, called a round air filter, a flat circular screen is cleaned by a brush attached to a rotating arm.

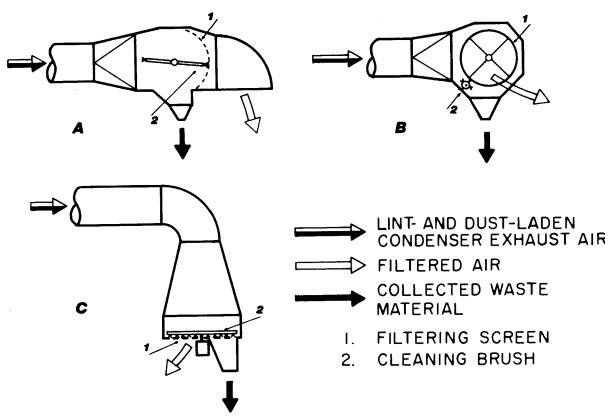

FIGURE 4–31.—Schematic diagrams of three designs of inline air filters. *A*, Stationary screen type. *B*, Revolving drum type. *C*, Round air filter.

All three designs operate on the same basic filtering principle. Fly lint and small-leaf trash are strained from the exhaust air by a fine-mesh filtering screen. Fly lint accumulates on the screen, forming a filtering batt for the separation of fine dust particles. Periodically, the accumulated material must be removed from the screen to prevent the buildup of excessive back pressure.

Inline filters are most efficient when operated on a collecting-cleaning cycle controlled by a pressure-differential switch. The switch auto-

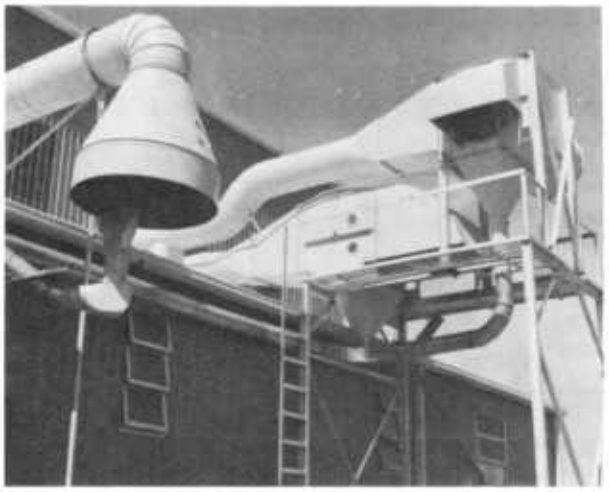

PN-5244

FIGURE 4–32.—Three designs of inline air filter. *Left to right*: round air filter, stationary screen type, and revolving drum type.

matically starts the screen-cleaning action when the pressure reaches a predetermined level and then stops the cleaning action when the pressure is relieved. This system allows an efficient dust-filtering batt to form before the screen is cleaned, which improves the dust-collecting ability of the inline filter. In those instances in which inline filters are operated without a pressure-differential switch, the filter-cleaning mechanism is allowed to operate continuously, simplifying the system but significantly lowering dust-collection efficiency.

Switches should be adjusted to start the cleaning action before the pressure reaches a level that would critically affect exhaust fan performance. The critical pressure varies from installation to installation. However, experience has shown that vaneaxial fans can usually operate satisfactorily against pressures of 1 to 1½ inches of water over normal operating pressure. Tubeaxial fan systems usually operate satisfactorily when pressures do not exceed ¾ inch of water. Final adjustment of the pressure-differential switch should be made under actual operating conditions.

The collection efficiency of an inline filter also depends upon the amounts of fly lint and dust in the exhaust air. Tests in New Mexico using machine-picked cotton showed an overall collection efficiency of 87 percent for a stationary-screen inline filter on the exhaust of a first-stage lint cleaner (Alberson and Baker 1964). Efficiencies of approximately 81 percent were obtained in Texas when ginning machine-stripped cotton (Baker and Parnell 1971). The Texas tests also showed no significant differences in collection efficiency among the three inline filter designs. Generally, an inline filter can be expected to collect all of the fly lint and up to about 70 percent of the fine dust.

TABLE 4–17.—*Specifications for bolting-grade wire cloth*

Mesh of screen (wires/inch)	Wire diameter (inch)	Size of opening (inch)	Open area (pct)	Pressure drop at 750-ft/min face velocity (inH_2O)
40 by 40	0.0065	0.0185	54.8	0.04
70 by 70	.0037	.0106	54.9	.05
105 by 105	.0030	.0065	46.9	.10

Inline filters require fine-mesh filtering screens with high open area percentages. Bolting-grade stainless steel or monel wire cloth has proved to be effective. Dimensions of wire cloth that have been successfully employed in inline filters are given in table 4–17.

Inline filters should be sized according to the volume of condenser exhaust air to be filtered. Screen face velocities of approximately 750 feet per minute have been satisfactorily employed. This velocity results in initial added pressure (screen resistance and shock losses) of 0.3 inch of water or less. Lower face velocities can be used, but the size of the filter must be increased. High face velocities create higher pressures. Recommended screen sizes for various air volumes are given in table 4–18.

Proper selection and adjustment of brushes are required for effective cleaning of the filtering screen. Soft bristles, such as horsehair, are not stiff enough; nylon bristles approximately 0.02 inch in diameter and 1 inch long have the necessary stiffness for satisfactory cleaning of filter screens. The brush should be adjusted so that the tips of the bristles firmly contact all of the screen surface area. Any part of the screen that the brush fails to touch will not be cleaned well and will tend to become clogged. Brush reels for stationary-screen filters and brush arms for round air filters should be driven at speeds of about 12 revolutions per minute. Brush cylinders on revolving drum filters should operate at approximately 30 revolutions per minute.

Inline filters should be inspected daily

TABLE 4–18.—*Screen-sizing table for inline filters*

Condenser capacity (bales/h)	Exhaust volume[1] (ft^3/min)	Exhaust fan diameter and type[2] (inches)	Gross screen area required[3] (ft^2)	Stationary screen[4]		Revolving drum diameter[5] (inches)	Round filter diameter (inches)
				Radius (inches)	Width (inches)		
Up to 2	Up to 3,000	V18	5.3	15	30	20	31
2 to 4	3,000 to 6,000	V18 to V21	10.6	21	42	30	44
4 to 6	6,000 to 9,000	V21 to T36	15.9	25	50	35	54
6 to 8	9,000 to 12,000	V24 to T42	21.2	29	58	41	62
8 to 10	12,000 to 15,000	V26 to T42	26.5	32	64	46	70
[6]10 to 15	15,000 to 20,000	T42	35.6	38	76	53	81
[6]15 to 20	20,000 to 25,000	T42	44.4	42	84	59	90

[1] Exhaust volume measured without lint in the system.
[2] Type of exhaust fan, vaneaxial or tubeaxial, indicated by letters V and T, respectively.
[3] Gross screen area based on 750 ft/min face velocity, assuming a 25-percent loss in area for screen supports.
[4] Based on a 120-degree screen arc.
[5] Length of revolving drum assumed to be equal to the diameter.
[6] Press condensers only.

throughout the active ginning season. Accumulations of lint on the brushes should be removed, and the waste exit should be kept clear of obstructions. Any part of the filtering screen which has become clogged should be cleaned with an airhose. Each year, before the ginning season starts, inline filters should be thoroughly cleaned and inspected for (1) good brush contact, (2) screen condition, (3) clearance through waste exit and mote lines, (4) correct tension and alinement of chain drives, and (5) accumulations of lint material in the electric motors.

CONDENSER DRUM COVERING

Short fibers and dust exhausted from condenser fans are probably the emissions most objectionable to gin employees and residents of the immediate area. This lint fly settles on electric lines, the gin yard, rooftops, and surroundings, causing not only a housekeeping problem but a serious fire hazard.

Tests at the U.S. Cotton Ginning Research Laboratory at Stoneville, Miss., have shown that the lint fly problems can be eliminated, for all practical purposes, by covering condenser drums with fine-mesh stainless-steel screen wire or replacing covering with fine, perforated metal (McCaskill and Moore 1966). The screen wire can be either 100 by 100 mesh with approximately 31 percent of open area or 70 by 70 mesh with approximately 54 percent of open area. The fine, perforated metal should have enough holes of 0.033-inch diameter to give approximately 20 percent of open area (table 4–19). The greater open area will result in less pressure on the system. The lint fly is eliminated, with only the very fine dust being discharged with the exhaust air. The slight increase in air resistance is not a problem where exhaust fans are used.

Figure 4–33 shows how this screen is applied to a standard condenser. The screen is stretched smooth over the condenser drum and soldered around both ends and longitudinally across the drum where seams are necessary. It will be necessary to adjust the doffing rollers to insure clearance to the drum.

CAUTION: Condenser drums that are blanked off with no more than one-fourth of the drum area exposed to the inlet air and lint should *not* be covered with screen. Ample exposed drum area is necessary to compensate

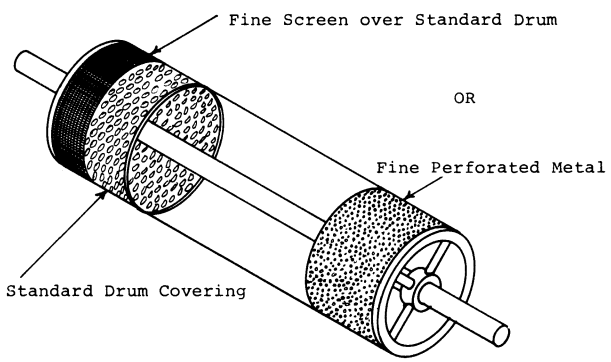

FIGURE 4–33.—Condenser drum covering.

TABLE 4–19.—*Dust and lint fly in emissions from a unit lint cleaner condenser exhaust with various types of coverings*

Type of drum covering and hole diameter	Holes per square inch	Open area (percent)	Lint fly and dust concentration (g/1,000 ft³)	Static pressure loss (inH_2O)
Perforated metal, 0.109-inch diameter (standard)	47	45	50.8	0.52
Perforated metal, 0.033-inch diameter	234	20	32.0	.70
100-by 100-mesh screen (31.4 percent open area) over standard drum (45 percent open area)	(1)	14	21.6	.75
70-by 70-mesh screen (54.9 percent open area) over standard drum (45 percent open area)	(2)	25	...	...

[1] 0.0056 inch between mesh.
[2] 0.0106 inch between mesh.

for the reduction in open area when fine screen is applied.

SKIMMERS

Skimmers are occasionally used instead of small-diameter cyclones for those fan exhausts that do not discharge large trash. Exhausts from unloader fans, overflow-suction fans, and separator-pull fans contain small-leaf trash, dust particles, and fly lint. Some of this small material can be collected by skimmers, but large trash such as burs and sticks clog the skimmer's narrow skimming slot.

Exhaust air enters the skimmer and follows the curved side walls along a circular arc 90° to 180° (fig. 4–34). The circular motion creates centrifugal forces that act on the entrained trash particles, pushing them toward the outside wall, where an adjustable vane and slot skims the particles and some of the air from the main airstream. The skimmed air must then be discharged into another trash-collection device, such as a cyclone collector, for final separation of the trash. The remainder of the main airstream is exhausted to the atmosphere.

The collection efficiency and pressure characteristics of a skimmer depend upon its radius of curvature, the air velocity, and the size of the skimming-slot opening. The size and weight of the particulate matter entrained in the air also affect collection efficiency. Higher collection efficiencies and pressure are associated with short radius of curvature, high velocity, and wide skimming slot. Thus, the design of a skimmer requires a compromise between collection efficiency, operating pressure, and the volume of skimmed air that requires further cleaning.

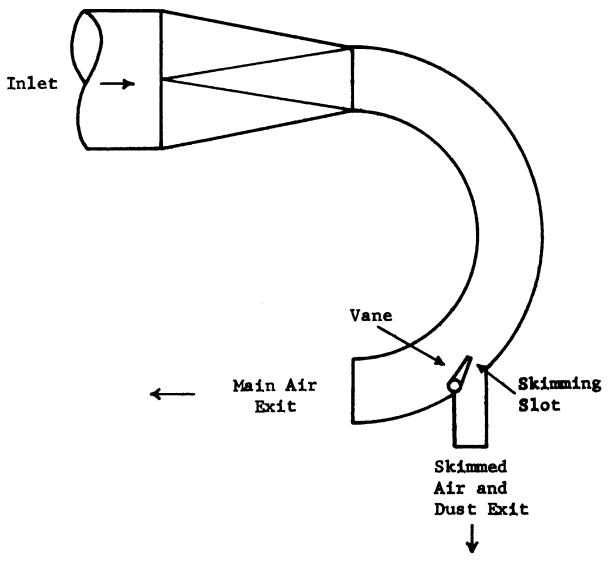

FIGURE 4–34.—Schematic diagram of a skimmer.

BUR HOPPERS

It is usually necessary for cotton gins to store gin trash temporarily prior to final disposal. Elevated bur hoppers provide a convenient means of accumulating truckloads of gin trash, and they also expedite the loading operation (fig. 4–35). Loading the trucks is accomplished by simply opening the bottom of the bur hopper and allowing the accumulated trash to fall into the truck.

Bur hoppers are available in lengths of 20,

PN-5245

FIGURE 4-35.—Typical bur hopper and spreader truck used extensively in stripper-harvesting areas.

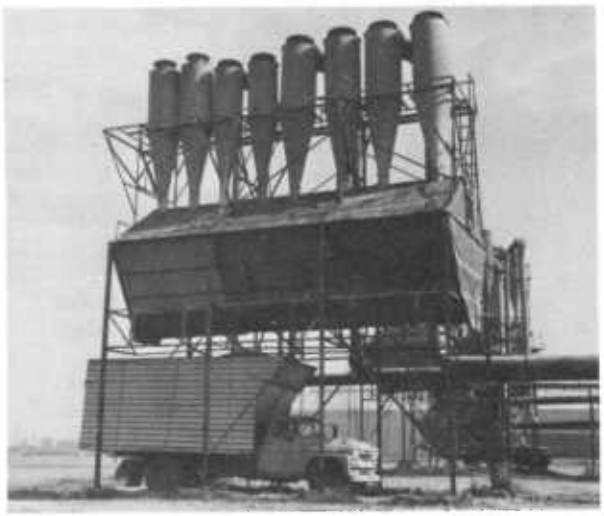

PN-5246

FIGURE 4-36.—Bur hopper with several pairs of cyclone collectors mounted on top.

30, and 40 feet. The hopper size required depends upon the type of cotton being ginned, the ginning rate, and the number of trucks being used to haul trash. Low-capacity gins processing less than eight bales of stripped cotton per hour or gins processing picked cotton usually find 20-foot hoppers satisfactory. Higher capacity gins, especially those ginning stripped cotton, require the 30- and 40-foot hoppers.

Trash can be blown directly into a bur hopper by one or more air lines or dropped into the hopper by cyclone collectors. The use of cyclone collectors is the preferred method. All of a gin's cyclone collectors may be mounted on top of the hopper (fig. 4-36). However, this practice has the disadvantages of inaccessibility to the collectors and a high risk of wind damage. In recent years, it has become common for gins to group most of their cyclones into a bank located close to the ground and to concentrate the separations from each collector into a single air line discharging into a single set of collectors on top of the hopper (fig. 4-37).

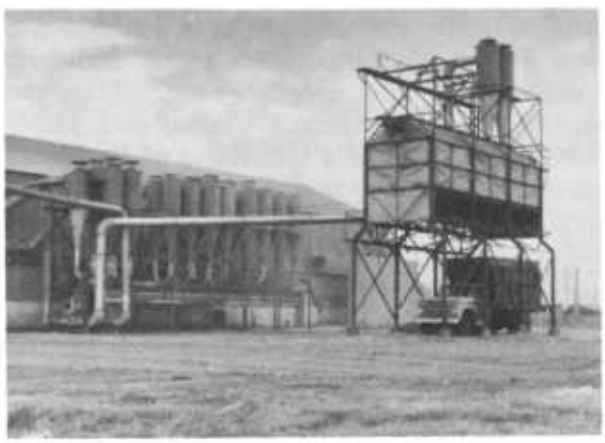

PN-5247

FIGURE 4-37.—A well-designed trash collection system with the main cyclone bank located near ground and one pair of cyclones loading the bur hopper.

LIVESTOCK FEED

In a few areas of the Cotton Belt, gin trash has become important as a livestock feed. On the High Plains of Texas, where concentrated cattle-feeding operations have been developed, the use of gin trash as a feed roughage has become commonplace. Gin trash is usually ground and mixed with the other rations at feed lots before feeding. However, some stockmen feed unground gin trash to their cattle as a supplemental roughage, usually allowing them to feed at will from piles of trash deposited on the ground.

Several cotton gins have installed elaborate grinding and pelleting equipment for gin trash (fig. 4-38). These systems produce pellets about one-fourth inch in diameter that can be

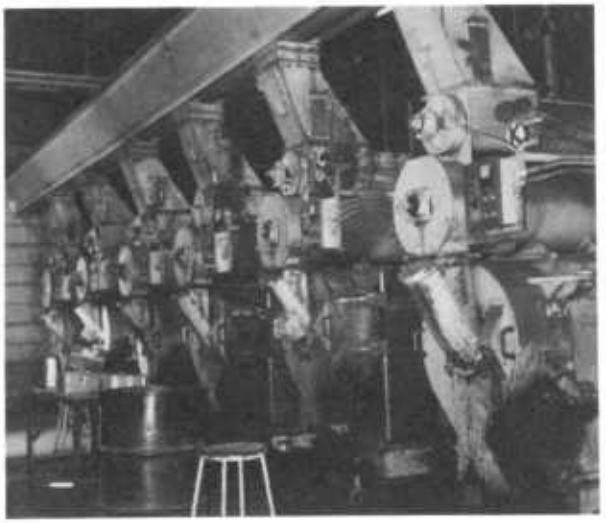

PN-5248

FIGURE 4–38.—Six bur pelleting machines at Acuff Co-operative Gin, Acuff, Tex.

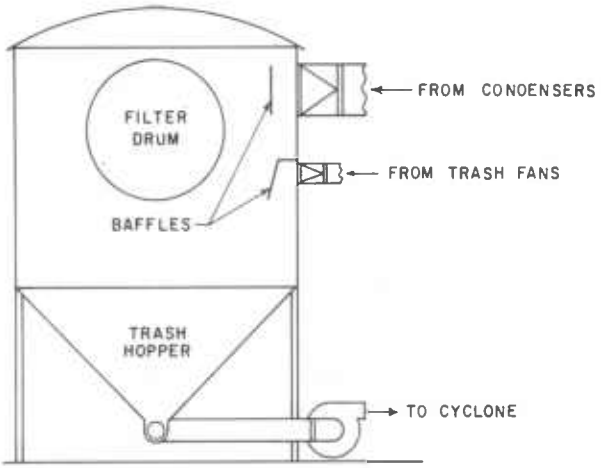

FIGURE 4–39.—Schematic of experimental filter enclosure.

easily handled, stored, and transported. Gin trash pellets, because of their high bulk density, can be economically shipped long distances; also, pellets are easier to handle and to mix with other feedstuffs than untreated gin trash. Storage is also simplified since pellets do not constitute as much of a fire hazard as untreated gin trash. Molasses or other materials can be added to gin trash during pelleting to increase its nutritional value and palatability.

UNIFILTER COLLECTION SYSTEM

A totally new system for collecting all waste from a cotton gin has been developed at the

PN-5249

FIGURE 4–40.—Vacuum nozzles doffing filter drum covered with nonwoven polyester media.

TABLE 4–20.—*Overall filter efficiency of the unifilter collection system for three ginning rates*

Ginning rate (bales/h)	Trash input (lb/h)	Overall efficiency (pct)
4	571	99.23
6	851	99.36
8	1,097	99.55

U.S. Cotton Ginning Research Laboratory (McCaskill and Wesley 1974). The unifilter trash-collection system is composed of a settling chamber equipped with an impinging baffle and a revolving drum covered with a filter medium. Figure 4–39 shows the arrangement of the components in the system. Light material and dust collect on the filter medium and are removed by vacuum nozzles (fig. 4–40). Cleaned air is discharged from both ends of the filter drum. After feasibility studies on small models indicated that the principle was sound, a model that would handle 25,000 cubic feet of air per minute was built and evaluated for overall collection efficiency (table 4–20).

A full-size trash collection system has been designed, fabricated, and installed for operational studies at a commercial gin whose ca-

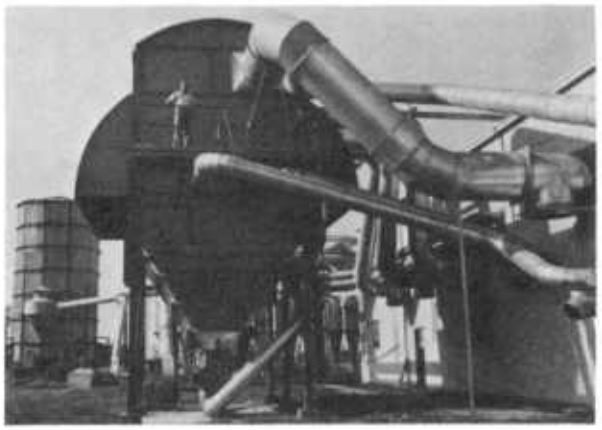

PN-5250

FIGURE 4–41.—Commercial-size experimental trash collection system.

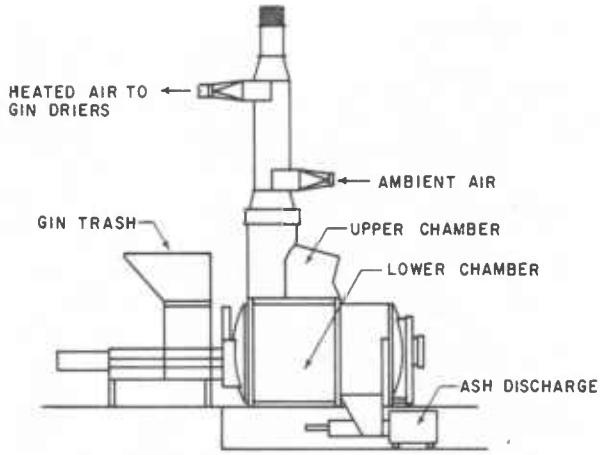

FIGURE 4–42.—Schematic of incinerator disposal system.

pacity is 15 to 20 bales per hour. The enclosure is 13 feet wide, 24 feet long, and 16 feet high, with a trash hopper underneath (fig. 4–41). A 12-inch-diameter screw conveyor is located in the bottom of the hopper to carry the heavy trash to a vacuum dropper, which removes the trash from the enclosure. Two filter drums, each 8 feet in diameter and 13 feet long, are located near the top of the enclosure. The filtered air is discharged from both ends of the drums to the atmosphere. The drums are covered with a nonwoven polyester medium which has a higher efficiency than polyurethane foam. The line carrying low-pressure condenser air is shown entering the enclosure above the filter drums, whereas the line for trash-laden, high-pressure air enters below the drums and is deflected down into the hopper to protect the medium. The low-pressure condenser air can be introduced into the enclosure below the filter drums, if desired, without affecting system efficiency.

All of the air discharged from the gin is piped into the enclosure for cleaning. A total of 111,000 cubic feet per minute of contaminated air is cleaned through 500 square feet of filter. This volume of airflow results in a face velocity of 222 feet per minute on the filter.

The light material and dust collect on the filter medium, which is continuously cleaned by 10 nozzles, each 24 inches wide. A No. 50 fan furnishes 700 cubic feet of air per nozzle per minute. This fan also handles the trash from the hopper.

The system was in operation for the entire 1973 season, during the ginning of over 7,000 bales of machine-picked cotton. It was found necessary to clean out the nozzles and remove the trash buildup on the nozzle supports every 200 to 300 bales, a job accomplished by 2 men in about 10 minutes on each occasion. Lint catching on parts of the nozzles can cause a problem, especially if lint-cleaner waste is collected with this system. These portions of the nozzles which cause problems should be removed if possible and the nozzles sanded smooth, especially around the ends where tags normally start to form.

The flexible plastic hose between the nozzle and the suction manifold should be a materials-handling type with a rubber liner.

Several rib fires occurred during the ginning season, and at least four major fires went through the filter to the trash pile. These fires caused no damage to the filter enclosure and only minor damage to the filter medium—not enough to require replacement.

The proper sizing of a unifilter system for a gin plant is dependent on the volume of air to be filtered and the face velocity at the filter medium. The efficiency goes up as the face velocity goes down. A face velocity of 150 to 250 feet per minute is satisfactory.

Table 4–21 gives the capacity at various face velocities for several drum sizes. The enclosure should be designed to fit the size and number of drums chosen for a particular installation.

RESEARCH ON INCINERATOR

Of the many disposal methods being tried, incineration is the simplest for the ginner; however, no incinerator installed at gins before

TABLE 4–21.—*Filter selection for unifilter collection systems, based on air volume and face velocity at filter medium*

Drum diameter (ft)	Filter area (ft^2)	Number of nozzles	Air volume (ft^3/min) at face velocity of— 100 ft/min	150 ft/min	200 ft/min	250 ft/min
4	50.4	2	5,040	7,560	10,080	12,600
4	75.6	3	7,560	11,340	15,120	18,900
5	62.8	2	6,280	9,420	12,560	15,700
5	94.2	3	9,420	14,130	18,840	23,550
5	125.6	4	12,560	18,840	25,120	31,400
6	75.2	2	7,520	11,280	15,040	18,800
6	112.8	3	11,280	16,920	22,560	28,200
6	150.4	4	15,040	22,560	30,080	37,600
7	88.0	2	8,800	13,200	17,600	22,000
7	132.0	3	13,200	19,800	26,400	33,000
7	176.0	4	17,600	26,400	35,200	44,000
7	220.0	5	22,000	33,000	44,000	55,000
8	150	3	15,000	22,500	30,000	37,500
8	200	4	20,000	30,000	40,000	50,000
8	250	5	25,000	37,500	50,000	62,500
8	300	6	30,000	45,000	60,000	75,000
9	169.8	3	16,980	25,470	33,960	42,450
9	226.4	4	22,640	33,960	45,280	56,600
9	283.0	5	28,300	42,450	56,600	70,750
9	339.6	6	33,960	50,940	67,920	84,900
10	188.4	3	18,840	28,260	37,680	47,100
10	251.2	4	25,120	37,680	50,240	62,800
10	314.0	5	31,400	47,100	62,800	78,500
10	376.8	6	37,680	56,520	75,360	94,200

1975 meets the strict emission standards now in force. Incinerators approved for all types of standard waste are available on the market, but none have been approved specifically for gin waste.

The Cotton Ginning Research Laboratory at Stoneville, Miss., has installed a small, multichamber incinerator to study its ability to dispose of gin waste (McCaskill and Wesley 1974). This system is composed of an automatic loader, two burning chambers, an automatic ash removal system, and a heat exchanger in the stack (fig. 4–42).

The incinerator operates on the controlled-air principle. Waste is heated in the lower chamber by controlling the introduction of air which, in turn, controls the temperature. This system results in very low air velocities so that ash particles are not entrained and carried to the upper chamber. Only smoke, unburned gases, and very small particles pass into the upper chamber. In the upper chamber the smoke is reheated and additional air is introduced so that the gases and smoke particles are oxidized rapidly. The high-temperature stack gases leave the upper chamber and enter the heat exchanger, where they are cooled by air passing over the wall of the exchanger. As the waste moves across the lower chamber, it is reduced to ash and discharged from the incinerator by the ash removal cylinder.

A pound of gin trash contains approximately 7,000 Btu of heat, depending on composition and moisture content. Based on an average of 203 pounds of trash per bale from machine-picked cotton and 740 pounds per bale from machine-stripped, the total potential heat value per bale would be 1,421,000 Btu for machine-picked cotton and 5,880,000 Btu for machine-stripped cotton.

If the heat exchanger is capable of operating at 40 percent efficiency, a 10-bale-per-hour gin plant could possibly reclaim 5,684,000 Btu per hour from machine-picked cotton and 23,520,000 Btu per hour from machine-stripped cotton. This amount of heat should be adequate for drying cotton under almost all conditions when ginning machine-picked cotton and more than adequate when ginning machine-stripped cotton. Reclaiming this heat would help offset

the initial investment in an incinerator equipped with a heat exchanger.

REFERENCES

Alberson, D. M., and Baker, R. V. 1964. An inline air filter for collecting cotton gin condenser air pollutants. U.S. Dep. Agric., Agric. Res. Serv. [Rep.] ARS 42–103, 16 pp.

Baker, R. V., and Parnell, C. B. 1971. Three types of condenser exhaust filters of fly lint and dust control at cotton gins. U.S. Dep. Agric., Agric. Res. Serv. [Rep.] ARS 42–192, 13 pp.

McCaskill, O. L., and Moore, V. P. 1966. Elimination of lint fly. The Cotton Gin and Oil Mill Press 67(27): 5–7.

———, and Wesley, R. A. 1974. The latest in pollution control. The Cotton Ginners' Journal and Yearbook 42(1): 34–38.

Wesley, R. A., Mayfield, W. D., and McCaskill, O. L. 1972. An evaluation of the cyclone collector for cotton gins. U.S. Dep. Agric. Tech. Bull. 1439, 13 pp.

Pink Bollworm Control in Gin Operations

By I. W. Kirk

Some cotton-production areas, primarily in the Southwestern United States, are infested with pink bollworms, *Pectinophora gossypiella* (Saunders). The pink bollworm is an insect that can cause severe damage to cotton. The U.S. Department of Agriculture, cooperating with State departments of agriculture, requires that certain regulations be observed to prevent the buildup and spread of this destructive cotton pest. These regulations pertain to the treatment and movement of cotton, cottonseed, and their byproducts within and from regulated areas. Producers, ginners, and seed processors are affected by these regulations. Those regulations pertaining to gin operations are discussed here.

PINK BOLLWORM QUARANTINE AND REGULATIONS

Quarantines and regulations are enforced by States and the Animal and Plant Health Inspection Service, Plant Protection and Quarantine Program (USDA). Assistance with specific problems or information on current regulations may be obtained by calling local APHIS representatives listed under United States Government, Department of Agriculture, in the telephone book.

The Code of Federal Regulations, Title 7, Chapter III, Part 301, Section 301.52–2a, as revised February 20, 1976, designated certain States or parts of certain States as pink bollworm regulated areas. The regulated areas are divided into generally infested areas and suppressive areas as follows:

Arizona

(1) Generally infested area: Entire State.
(2) Suppressive area: None.

Arkansas

(1) Generally infested area: None.
(2) Suppressive area:
Clay County. The entire county.
Conway County. The entire county.
Craighead County. The entire county.
Crittenden County. That portion of the county lying north of U.S. Highway 70, west of Interstate 55, and south of State Highway 42.
Franklin County. The entire county.
Green County. The entire county.
Independence County. The entire county.
Jackson County. The entire county.
Jefferson County. The entire county.
Johnson County. The entire county.
Lafayette County. The entire county.
Lawrence County. The entire county.
Lincoln County. That portion of the county lying north of U.S. Highway 65.
Little River County. The entire county.
Logan County. The entire county.
Lonoke County. The entire county.
Miller County. The entire county.
Mississippi County. That portion of the county lying north of State Highway 118, east of State Highway 77, south of State Highway 158, and west of the Mississippi River.
Poinsett County. That portion of the county lying west of the St. Francis River.
Pope County. The entire county.
Pulaski County. The entire county.
Randolph County. The entire county.
Washington County. The entire county.
Woodruff County. The entire county.
Yell County. The entire county.

California

(1) Generally infested area:
Imperial County. The entire county.
Inyo County. That portion of the county lying east of the east boundary of Range 4 East, SBBM.
Los Angeles County. That portion of the county lying east of the east boundary of Range 15 West and north of the north boundary of Township 4, North, SBBM.
Riverside County. The entire county.
San Bernardino County. That portion of the county lying east of the east boundary of Range 4 East, SBBM.
San Diego County. The entire county.

(2) Suppressive area:
Fresno County. The entire county.
Kern County. The entire county.
Kings County. The entire county.
Madera County. The entire county.
Merced County. The entire county.
Tulare County. The entire county.

Florida

(1) Generally infested area: None.
(2) Suppressive area:
Broward County. The entire county.
Charlotte County. The entire county.
Collier County. The entire county.
Dade County. The entire county.
DeSoto County. The entire county.
Glades County. The entire county.
Hardee County. The entire county.
Hendry County. The entire county.
Highlands County. The entire county.
Hillsborough County. The entire county.
Lee County. The entire county.
Manatee County. The entire county.
Martin County. The entire county.
Monroe County. The entire county.
Okeechobee County. The entire county.
Palm Beach County. The entire county.
Pinellas County. The entire county.
Sarasota County. The entire county.
St. Lucie County. The entire county.

Louisiana

(1) Generally infested area: None.
(2) Suppressive area:
Bienville Parish. The entire parish.
Bossier Parish. The entire parish.
Caddo Parish. The entire parish.
Catahoula Parish. The entire parish.
DeSoto Parish. The entire parish.
Grant Parish. The entire parish.
Natchitoches Parish. The entire parish.
Rapides Parish. The entire parish.
Red River Parish. The entire parish.
Webster Parish. The entire parish.

Missouri

(1) Generally infested area: None.
(2) Suppressive area:
Butler County. The entire county.
Dunklin County. The entire county.
Mississippi County. The entire county.
New Madrid County. The entire county.
Pemiscot County. The entire county.
Ripley County. The entire county.
Scott County. The entire county.
Stoddard County. The entire county.

Nevada

(1) Generally infested area:
Clark County. The entire county.
Nye County. The entire county.
(2) Suppressive area: None.

New Mexico

(1) Generally infested area: Entire State.
(2) Suppressive area: None.

Oklahoma

(1) Generally infested area: Entire State.
(2) Suppressive area: None.

Texas

(1) Generally infested area: Entire State.
(2) Suppressive area: None.

The following articles may not be moved interstate from any regulated area except with an appropriate certificate or permit:

1. Cotton and wild cotton, including all parts of such plants.
2. Seed cotton.
3. Cottonseed.
4. Cottonseed hulls.
5. Cotton lint.

   Baled cotton lint is exempt if compressed to a minimum of 22 pounds per cubic foot.

   Baled cotton lint moving from the generally infested area into the suppressive area is exempt if the lint is from seed cotton produced in the suppressive area and moved to the generally infested area for ginning, provided the identity of the baled cotton lint is maintained.

   Samples of cotton lint of the usual trade size are exempt. The samples may be assembled in a single package for shipment.
6. Cotton linters.

   Linters are exempt if compressed to a minimum of 22 pounds per cubic foot.

   Samples of cotton linters of the usual trade size are exempt. Samples may be assembled in a single package for shipment.
7. Cotton waste produced at cotton gins, cottonseed oil mills, and cotton textile mills.

   Lint cleaner waste is exempt if compressed to a minimum of 22 pounds per cubic foot.
8. Cotton gin trash.
9. Used bagging and other used wrappers for cotton.
10. Used cotton harvesting equipment and used cotton ginning and cotton oil mill equipment.
11. Okra and kenaf, including all parts of such plants *except* canned or frozen okra.

    Edible okra is exempt if produced during the period December 1 to May 15 inclusive, *except* that okra consigned to California is exempt only if produced during the period of January 1 to March 15 inclusive.
12. Any other products, articles, or means of conveyance of any character whatsoever, not covered by the above, when it is determined by an inspector that they present a hazard of spread of the pink bollworm

and the person in possession thereof has been so notified.

However, treatments and attachment of certificates or permits are not required to move the above materials interstate from a generally infested area to a contiguous generally infested area or from a suppressive area to a contiguous generally infested area.

Cottonseed.—In general, cottonseed can move freely to oil mills within the generally infested or suppressive regulated areas without treatment.

Cottonseed may be eligible for movement outside the regulated area provided it is (1) heated to 150° F for at least 30 seconds or 145° F for at least 45 seconds or (2) fumigated with methyl bromide, hydrocyanic acid, or aluminum phosphide. Most cotton planting-seed acid delinting plants qualify seed for movement under 1 above.

Cottonseed may also be eligible for movement, for processing on arrival, by APHIS permit during host-free periods from a generally infested area to a suppressive area or from a suppressive area to a nonregulated area.

Gin trash.—The ginner is affected by quarantine regulations in disposing of gin trash. Several approved methods of treatment may be used, but the single-fan treatment method is used most extensively.

Research has shown that if gin trash is passed through the wheel of a conventional trash fan operating according to pink bollworm quarantine regulations, the action of the fan will kill the pink bollworms in the trash. These specified conditions are:

1. No fan shall be used with a wheel diameter of less than 19 inches.
2. The housing or scroll shall be constructed of plate steel or cast iron.
3. Patching of housing shall be by welding or plate or cast insertions. No patching shall be done with belting, sacks, rubber, or any other shock absorbing substance, but the fan housing or scroll and piping elbows may be lined with rubber if desired.
4. No gin trash wheel shall be used in an oversized casing, but oversized or standard wheels may be used in standard casings only.
5. The wheel must be laterally centered to have equal clearance front and back.

TABLE 4–22.—*Federal pink bollworm quarantine requirements regarding wheel diameter, inlet size, and speed of operation of single fans for treating gin trash*

Fan wheel diameter (inches)	Maximum inlet size (inches)	Minimum speed (r/min)	Maximum safe speed (r/min)
19	10 to 10½	2,760	3,020
19½		2,690	2,940
20		2,620	2,860
20½	10½ to 11	2,560	2,790
21		2,490	2,730
21½		2,430	2,660
22		2,380	2,610
22½		2,330	2,550
23		2,280	2,490
23½	11½ to 12	2,230	2,440
24		2,180	2,390
24½		2,140	2,340
25		2,090	2,290
25½		2,100	2,250
26		2,060	2,200
26½		2,020	2,160
27	12 to 12½	1,980	2,120
27½		1,940	2,080
28		1,910	2,050
28½		1,880	2,010
29		1,840	1,980
29½		1,810	1,940
30		1,790	1,910
30½		1,750	1,880
31		1,725	1,850
31½		1,700	1,825
32		1,700	1,790
32½		1,700	1,760

6. The fan wheel may be either a standard straight, forward, reverse, or curved tip having not less than six blades.
7. Trash must enter at a 90° angle to the fan wheel. This may be accomplished by the use of either a straight inlet pipe or a 90° elbow (fig. 4–43); however, previously approved banjo-type elbows and adapters are acceptable.
8. Fan wheel speeds shall comply with the speed in table 4–22. Fans of larger diameter than shown in the table shall have a minimum speed of 1,700 revolutions per minute.
9. In the event that the inlet pipe is smaller in diameter than the fan housing inlet, the same pipe size should be maintained to the fan housing and protrude inside as shown

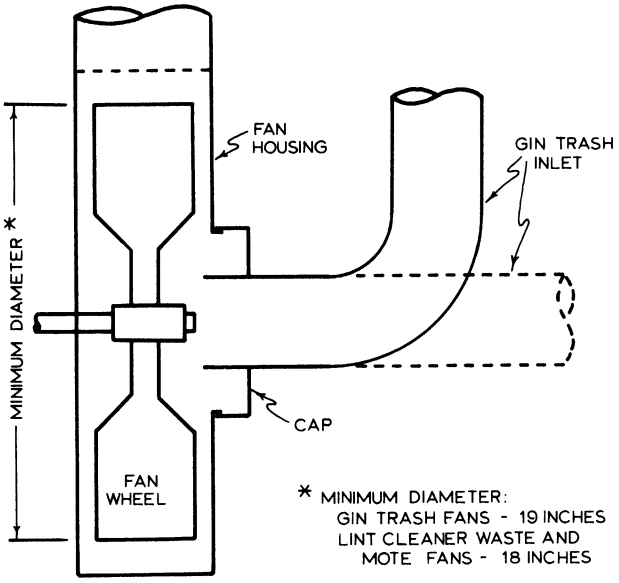

FIGURE 4–43.—Approved fan inlet connections.

in figure 4–43. Tapered cone inlet adapter for pipe connections to fan should not be used, unless the inlet pipe is larger in diameter than the fan housing inlet. The inlet pipe should extend at least five-eighths inch past the fan housing.

10. Inlet pipe to the fan shall not exceed the diameter of the pipe bringing material to the fan.

Lint-cleaner waste and motes.—Lint-cleaner waste and motes are not considered the same as gin trash. However, quarantine requirements for handling these materials are essentially the same as for handling gin trash. The single-fan method of treatment as specified above for gin trash is appropriate for handling lint-cleaner waste and motes with the following exceptions:

1. Minimum fan wheel diameter may be 18 inches. (Minimum speed for 18-inch-diameter lint-cleaner waste or mote fan is 2,550 revolutions per minute.)
2. Minimum fan speeds may be reduced 12 percent from those shown in table 4–22.

SAFETY WARNING: Fans must not be operated above their design maximum safe speed. Fan-manufacturing companies can supply this information. As a general rule, tip speed of gin trash fans should not exceed 15,000 feet per minute for safe operation.

Gin machinery and equipment.—Mechanical cotton-processing machinery that has been used in regulated areas must be fumigated with methyl bromide according to APHIS regulations before it may be transported to nonregulated areas. However, storage of unused gin equipment for 2 years prior to shipment will also be approved as adequate treatment.

EVALUATING GIN SYSTEMS FOR PINK BOLLWORM KILL POTENTIAL

A high percentage of pink bollworms are killed during the cotton-ginning process. Research has shown increasing kill percentage with increasing complexity of the gin setup. This research has also shown that the capability of a system for killing pink bollworms during processing could be related to the number of

Equipment item	Equivalent cylinders (each)	Number of items	Total cylinders
Drier[1]	2	_____	_____
Cleaner	Actual	_____	_____
Bur extractor or stick machine	3	_____	_____
Separator	4	_____	_____
Extractor feeder	6	_____	_____
Gin[2]	10	_____	_____
Seed blow system	3	_____	_____
Total			_____
Percent kill			_____

[1] Based on 24-shelf drier without heat.
[2] If gin is operating below 600 r/min it is not rated because of low kill.

FIGURE 4–44.—Sample form for rating gins for pink bollworm kill.

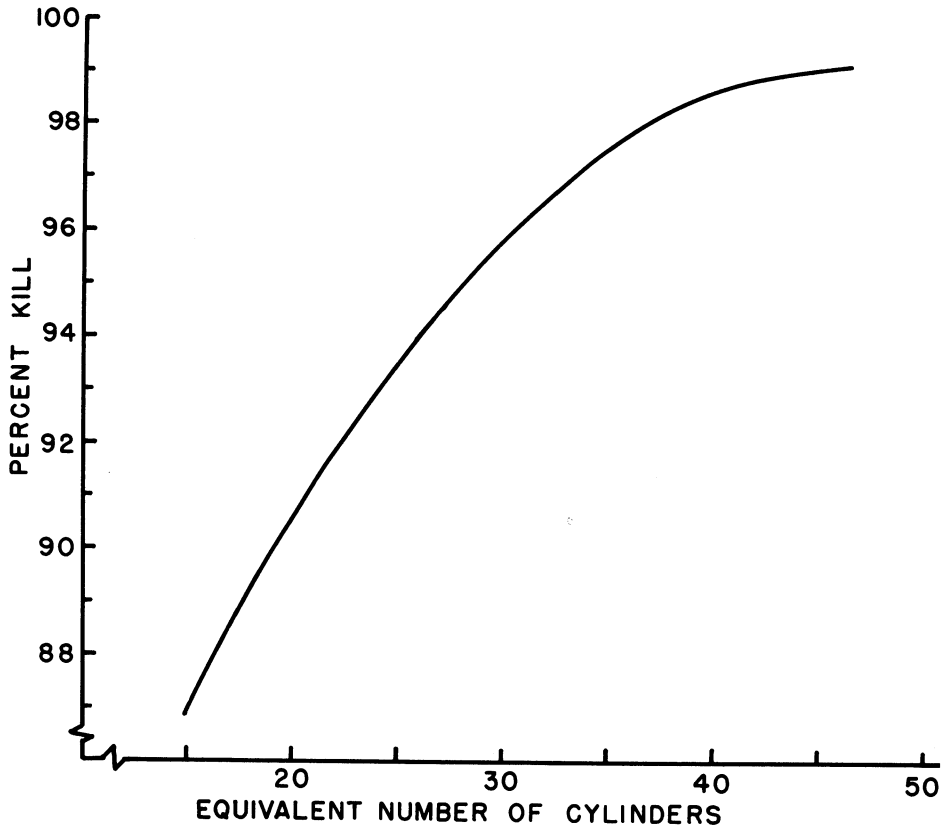

FIGURE 4–45.—Percentage of expected pink bollworm kill in a ginning system for various numbers of equivalent cleaning cylinders in the system.

cleaning cylinders in the overhead cleaning system plus conversion factors equivalent to cylinders of cleaning for the remainder of the various pieces of equipment in the system.

Figure 4–44 shows the cylinder conversion equivalents and a tabulation form for rating the gin system. The expected percentage of pink bollworm kill for a rated gin system is found in figure 4–45 from the equivalent total cylinders for the gin system.

REFERENCES

Graham, H. M., Robertson, O. T., and Stedronsky, V. L. 1967. A method of evaluating cotton gins for pink bollworm kill. U.S. Dep. Agric., Agric. Res. Serv. [Rep.] ARS 33–121, 5 pp.

Robertson, O. T., Martin, D. F., Alberson, D. M., Stedronsky, V. L., and McEachern, D. M. 1963. Pink bollworm kill with improved gin equipment. U.S. Dep. Agric. Prod. Res. Rep. 73, 8 pp.

———, Stedronsky, V. L., and Currie, D. H. 1959. Kill of pink bollworm in the cotton gin and the oil mill. U.S. Dep. Agric. Prod. Res. Rep. 26, 22 pp.

SECTION 5.—POWER: MOTORS AND ENGINES

By W. E. Garner

As elsewhere in industry, energy shortages and high fuel prices have focused attention on ways to reduce the cost of power in cotton gins. The advantages and disadvantages of the most common sources of power are presented here, to assist ginners in evaluating these factors, so as to select the most economical and efficient sources of power for a given installation.

The principal characteristics required of cotton-gin power units are constant speed, ample capacity to handle overloads, durability, and economy in operation and maintenance. The most common sources of power are electric motors and diesel, natural gas, and liquefied petroleum (bottled) gas engines. Each has significant advantages and disadvantages.

A 1974 survey of gin equipment in the United States by the USDA Agricultural Marketing Service showed that the percentages of each source of power for the main engine or motor were as follows:

	Percent
Electricity	83.6
Diesel fuel	6.8
Natural gas	6.6
Bottled gas	2.9
Other	0.1

Several factors should be considered in selecting a power unit for a given installation. Among these are amount of power required, initial cost of equipment, cost of fuel or electric energy, cost of lubrication, kind of labor needed, expense of maintenance, probable service life, and decrease in power capacity resulting from use.

Diesel, natural gas, and LPG engines have much to recommend them for the seasonal service of cotton ginning. In selecting such engines, the purchaser should allow for a liberal margin in power over that which is normally required, to accommodate peak loads and future expansion. Most manufacturers have a continuous rating for their engines. This rating should be applicable for continuous-duty cotton-gin service without further derating.

Table 5–1 lists the brake horsepower and other characteristics of several engines designed for continuous cotton-gin service.

Figure 5–1 shows a diesel engine installed in a cotton gin as the main source of power.

The amount of electrical energy required varies considerably, depending on how constant and intermittent loads are handled and on how much fans and other accessories are used. In electrically operated gins, it is highly advisable to have separate motors to carry the intermittent work loads of pumps, presses, and seed loading rather than have the main motor carry these loads. (In large gins, this tends to result in numerous motors for individual drives. Electric power companies usually offer consulting and testing services to their patrons, to assist them achieve the most economical use of electricity.)

Manufacturers of cotton-ginning machinery publish data sheets giving the recommended horsepower for their machines, such as gin stands, separators, cleaners, and condensers, operating at varying capacities. These data

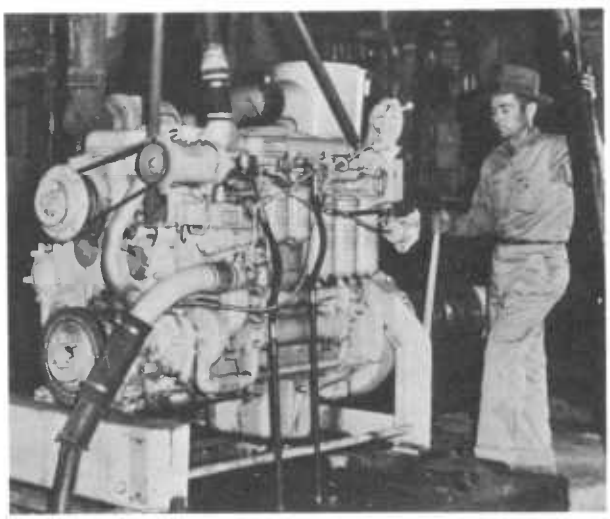

PN-5251

Figure 5–1.—A diesel engine used as the main source of power in a cotton gin.

TABLE 5–1.—*Characteristics of several engines designed for continuous cotton-gin service*

Model[1]	Configuration—No. of cylinders	Bore		Stroke		Displacement		Maximum rating[2]			Continuous rating[3]			Peak torque			Altitude capability[4]	
		Inches	mm	Inches	mm	Cubic inches	Liters	hp	(kW)	@r/min	hp	(kW)	@r/min	lb-ft	(N•m)	@r/min	Feet	Meters
V-378-P155	V-6	4⅝	117	3¾	95	378	6.2	149	(111)	@3,300	124	(93)	@3,000	289	(392)	@1,900	500	152
V-504-P210	V-8	4⅝	117	3¾	95	504	8.3	202	(150)	@3,300	166	(123)	@3,000	387	(525)	@1,900	500	152
N-855-P235	In line—6	5½	140	6	152	855	14.0	235	(174)	@2,100	195	(145)	@1,800	647	(877)	@1,500	500	152
NT-855-P335	In line—6	5½	140	6	152	855	14.0	335	(250)	@2,100	265	(178)	@1,800	930	(1,261)	@1,500	12,000	3,660
NTA-855-P360	In line—6	5½	140	6	152	855	14.0	360	(268)	@2,100	280	(207)	@1,800	990	(1,342)	@1,500	12,000	3,660
NTA-855-P400	In line—6	5½	140	6	152	855	14.0	400	(297)	@2,100	323	(240)	@1,800	1,150	(1,559)	@1,600	7,500	2,280
KT-1150-P450	In line—6	6¼	159	6¼	159	1,150	18.9	450	(334)	@2,100	365	(270)	@1,800	1,350	(1,831)	@1,500	12,000	3,660
KTA-1150-P600	In line—6	6¼	159	6¼	159	1,150	18.9	600	(445)	@2,100	470	(347)	@1,800	1,650	(2,237)	@1,600	10,000	3,050
VTA-1710-P700	V-12	5½	140	6	152	1,710	28.0	700	(522)	@2,000	545	(404)	@1,800	1,925	(2,610)	@1,500	8,500	2,590
VTA-1710-P800	V-12	5½	140	6	152	1,710	28.0	800	(597)	@2,100	620	(460)	@1,800	2,200	(2,983)	@1,550	7,500	2,280
KT-2300-P900	V-12	6¼	159	6¼	159	2,300	37.8	900	(691)	@2,100	700	(522)	@1,800	2,475	(3,356)	@1,500	12,000	3,660
KTA-2300-P1200	V-12	6¼	159	6¼	159	2,300	37.8	1,200	(895)	@2,100	940	(698)	@1,800	3,300	(4,470)	@1,600	12,000	3,660

[1] Models with T in designation are turbocharged; those with TA are turbocharged and aftercooled; all others are naturally aspirated.

[2] Maximum output without engine-driven fan. Rating is applicable to intermittent applications and conforms with SAE standard J816b; British Standard overload BS 649; and DIN 6270 continuous rating B.

[3] Continuous rating without engine-driven fan. Rating is applicable to continuous 24-hour-a-day service and conforms with BS 649 and DIN 6270 continuous rating A.

[4] Maximum power is delivered up to the altitudes shown. Above these altitudes, naturally aspirated engines should be derated 3% per 1,000 feet and turbocharged engines should be derated as noted on certified curves for specific models. Continuous ratings of naturally aspirated engines are attainable to approximately 6,500 feet (1,980 m).

Source: Cummins Engine Co.

sheets usually show both the recommended size for an individual electric motor and the horsepower to be used for calculating total horsepower requirements for a central engine-driven plant. The horsepower for purposes of calculation in a central engine-driven plant is less than the recommended horsepower for individual electric motors. This is due to the fact that normally an individual machine will require much less horsepower than is required to overcome periodic surges of flow through the equipment. In a central engine-driven plant, the surges will average out at any one time so that the overall load on the central engine will never need to be as great as the sum of the horsepowers of the individual electric motors.

Electric motors for powering cotton gins must be able to operate in air heavily laden with dirt and lint, which is common to cotton gins. Also, the ambient temperatures, particularly in the upper areas of a cotton gin, often become very high. In addition, it is impossible to obtain uniform power requirements for the various machines in the gin plant, even though bulk feed-control units have done much to level out extreme surges in power requirements. Uniformity in these conditions is difficult for any one type of electric motor to attain.

Totally enclosed motors are protected from dust and lint, but even fan-cooled enclosed motors do not have the overload capacity of open motors, which can dissipate heat more easily. The totally enclosed motor may give more trouble because of overheating than the open motor will give because of contamination from dust and lint. A compromise may be a motor built in a large frame that has large openings to prevent clogging by lint and dust. The large frame enables this motor to dissipate heat more readily. Thus, the motor can operate under overloads of up to 25 percent for short periods of time to overcome the incalculable surges that sometimes develop in gin machinery. The cost of this large-frame, open motor is between the costs of a standard drip-proof motor and the totally enclosed fan-cooled motor, which is the most expensive. Despite apparent shortcomings, many standard drip-proof motors are giving satisfactory service.

REFERENCE

U.S. Agricultural Marketing Service. 1974. Cotton gin equipment, 3 pp.

SECTION 6.—GINNING RECOMMENDATIONS

Gins To Handle Specific Types of Cotton

By W. E. GARNER and R. V. BAKER

Numerous tests by the Agricultural Research Service's cotton ginning research laboratories and cooperating agencies of USDA have formed the basis for recommendations on the sequence and amount of gin machinery to be used with cotton harvested by various methods, to achieve satisfactory bale value for the producer on one hand and to preserve the inherent quality of the cotton on the other.

As a result of these findings, and considering premiums and discounts of the marketing system, recommendations for ginning machine-picked and machine-stripped cotton have evolved. These recommendations are primarily for ginning $\frac{15}{16}$-inch to $1\frac{1}{8}$-inch White and Light-Spotted cotton, but the principles apply to all cotton. Even though recommendations were developed using experimental gin setups handling three to eight bales per hour, they have also been found applicable for new high-capacity ginning plants installed in the past 10 or 12 years. Some variation from, or modification of, these recommendations will be necessary in certain areas of the Cotton Belt at certain times of the year or for special harvesting conditions. High grades will result from cotton coming from clean fields and harvested by machines in good condition, while grassy, weedy fields and poor harvesting practices will result in lower grades.

MACHINE-PICKED COTTON

Research has shown that machine-picked Upland cotton varieties from across the Cotton Belt have similar cleaning characteristics. The basic ginning recommendation for sequence and amount of machinery for machine-picked cotton is as follows:

1. Rock and green-boll trap.
2. Feed control.
3. Tower drier or equivalent.
4. Cylinder cleaner: five to seven cylinders.
5. Stick and green-leaf machine.
6. Tower drier or equivalent.
7. Cylinder cleaner: five to seven cylinders.
8. Cylinder cleaner: five to seven cylinders (optional).
9. Feeder, extractor type.
10. Saw gin stand.
11. Saw-cylinder lint cleaner.
12. Saw-cylinder lint cleaner.
13. Press.

The optional cylinder cleaner (item 8) is recommended for the difficult-to-clean cottons of the irrigated West. A gin flow chart for machine-picked cotton is shown in figure 6–1.

MACHINE-STRIPPED COTTON

Because machine-stripped cotton contains 6 to 10 times as much foreign matter as machine-picked cotton, ginning systems in stripper areas have to be more elaborate than those in picker areas. Additional extraction equipment is required to cope with large amounts of burs and sticks which, unless removed, will seriously lower gin stand performance. Provisions also have to be made for removing green bolls and

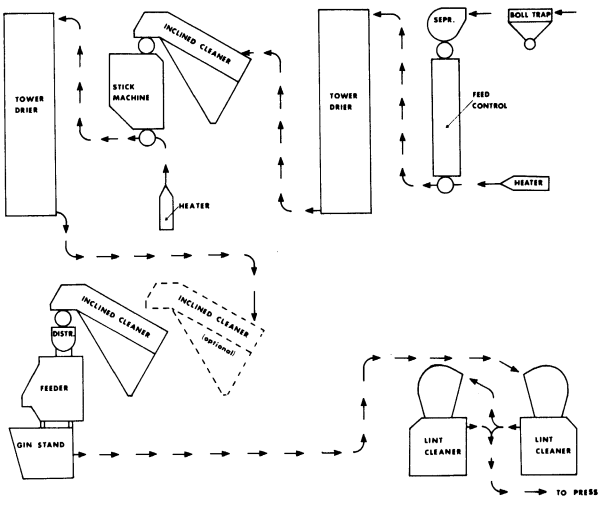

FIGURE 6–1.—Recommended gin machinery arrangements for machine-picked cotton.

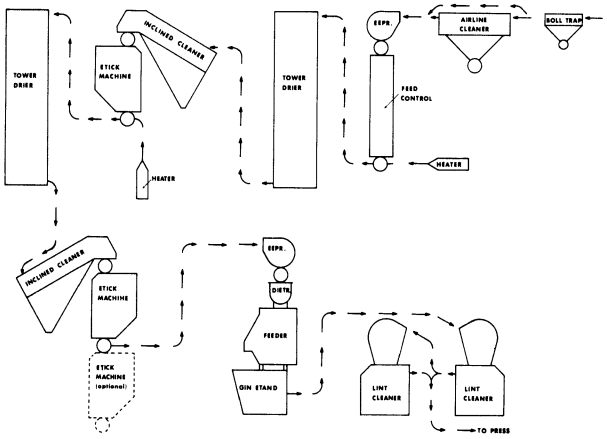

FIGURE 6–2.—Recommended gin machinery arrangements for stripped cotton.

sand from stripped cotton. Green-boll traps and air-line cleaners located early in the cleaning sequence perform these functions.

Even though the cleaning characteristics of stripped cottons vary slightly from variety to variety, the following array of gin machinery has been found to be near optimum for most varieties:

1. Green-boll trap.
2. Air-line cleaner.
3. Feed control.
4. Tower drier or equivalent.
5. Cylinder cleaner: five to seven cylinders.
6. Stick machine.
7. Tower drier or equivalent.
8. Cylinder cleaner: five to seven cylinders.
9. Stick machine.
10. Optional stick machine.
11. Feeder, extractor type.
12. Saw gin stand.
13. Saw-cylinder lint cleaner.
14. Saw-cylinder lint cleaner.
15. Press.

The optional stick machine (item 10) is recommended only for stripped cotton containing in excess of 32 percent foreign matter. This range of foreign matter content is approximately equivalent to a lint turnout of 22 percent or less. A flow diagram of the recommended machinery for a stripper gin is shown in figure 6–2.

BYPASSES

The recommendation above represents the maximum amount of machinery that should be needed. Obviously, any machinery which is not necessary for the particular lot of cotton should be bypassed. Driers, seed-cotton cleaners and extractors, and lint cleaners should be provided with bypasses to allow selection of less drying, cleaning and lint cleaning when extra-clean, dry cotton is brought to the gin. For example, hand-picked cotton now represents less than 1 percent of the total crop, but may be significant in a few areas. Appropriate bypasses should be used in handling this cotton, especially if it is clean and dry. Also, in irrigated areas, certain varieties have better cleaning characteristics, which often require use of only one lint cleaner to produce satisfactory quality. Special market conditions will sometimes influence the amount of equipment used, also.

A necessary part of the ginning machinery recommendation is that the driers should be adjusted to produce lint at the gin stand with a moisture content from 7 to 8 percent. Research has shown that cotton at this moisture level is more able to withstand tensile stresses without breaking than cotton at lower moisture contents.

Judicious use of the gin machinery combinations discussed here should yield good returns to the producer and provide grades acceptable to the spinning mills.

Effects of Gin Machinery on Cotton Quality

By ANSELM C. GRIFFIN, JR.

Cotton possesses its highest fiber quality and best potential spinning performance when it is on the stalk. Lint quality of the cotton in the bale coming from the gin press depends on many factors, including (1) variety of cotton, (2) soil type and weather conditions, (3) cultural and harvesting practices, (4) moisture and trash content, and (5) ginning treatments and processes. Usually, the first four factors exert greater influence on lint quality than extremes in ginning treatment.

Nevertheless, any mechanical handling, up to and including spinning, may modify the natural qualities or characteristics of cotton. Ginning is a series of thermopneumatic and mechanical processes and, at best, can only

preserve qualities and characteristics inherent in the cotton when it enters the ginning plant.

Lint grade, staple length, fiber fineness and maturity (micronaire), and fiber strength—in the order listed—are the factors that determine the selling price of cotton. Lint grade is determined principally by color and amount of foreign matter present. Ginning processes may do little to change the color of cotton, and they can change the staple length to only a limited extent. Ginning does not affect fineness and maturity.

In addition to its principal function of separating lint from seed, the modern cotton gin is equipped to remove from the cotton a large percentage of the foreign matter that would significantly reduce the selling price of the ginned lint. Today's ginner must have a twofold objective: (1) to produce ginned lint of grades satisfactory to the grower and (2) to gin the cotton with minimum reduction in fiber spinning quality, so that it will meet the demands of its ultimate users, the spinner and the consumer.

Research has shown that, above certain limits, the strength of individual fibers decreases as the fibers become drier and warmer and that, for a given quantity of gin machinery, increased drying may increase fiber breakage and thus reduce length uniformity.

Yarn strength, yarn appearance, and spinning-end breakage are three of the most important spinning quality elements. All are affected by length uniformity and, therefore, by the proportion of short or broken fibers. These three elements are usually preserved best when cotton is ginned with minimum drying and minimum use of other gin machinery.

The relations between gin drying, lint grade, yarn strength, and yarn appearance are shown in figure 6–3. Grade increases attributable to drying come from two sources. The grade increase that occurs when moisture is reduced from above 7 to about 7 percent is due to moving from rough to smooth preparation. As the fiber moisture content goes below 7 percent, foreign matter removal by the cleaners increases, but at a declining rate, so there is no real advantage to lint grade by drying below the 5-percent fiber-moisture level.

Yarn strength continuously decreases as drying increases (or as the fiber moisture content decreases) because of the increased amount of

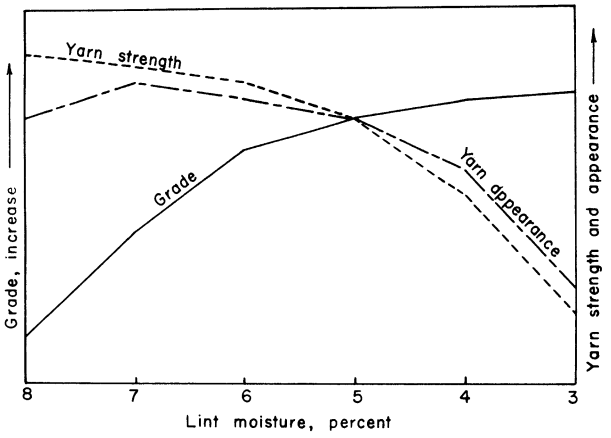

FIGURE 6–3.—Effects of gin drying on lint grade, yarn strength, and yarn appearance.

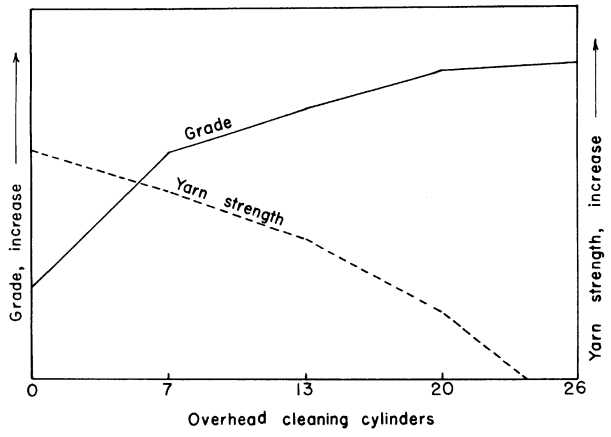

FIGURE 6–4.—Effects of seed-cotton cleaners on lint grade and yarn strength.

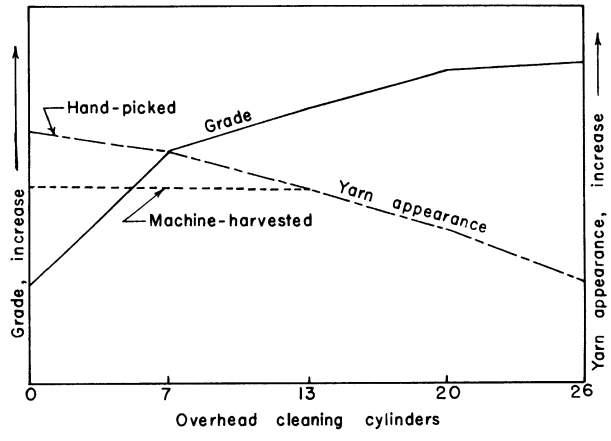

FIGURE 6–5.—Effects of seed-cotton cleaners on lint grade and yarn appearance for hand-picked and machine-picked cotton.

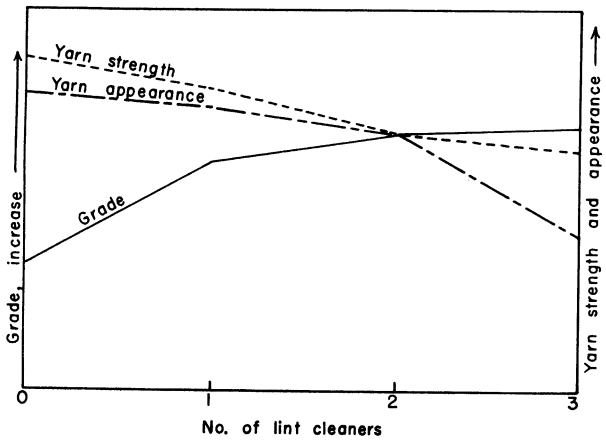

FIGURE 6–6.—Effect of lint cleaners on lint grade, yarn strength, and appearance.

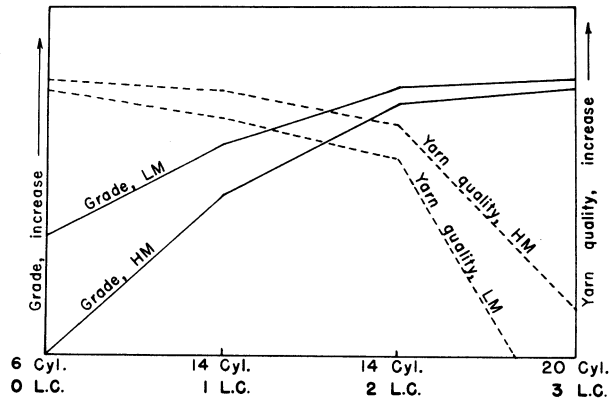

FIGURE 6–7.—Effects of seed-cotton cleaning and lint cleaning on lint grade and yarn quality for cotton of two fiber-moisture levels during gin processing. Yarn quality includes yarn strength, yarn appearance, and spinning breakage.

short fiber in the ginned lint. Below the 5-percent moisture level at ginning, the rate of fiber breakage increases rapidly with corresponding decreases in yarn strength.

Yarn appearance improves with drying up to a point, because of increased foreign-matter removal. But the effect of increased short fiber content (and perhaps other factors) on yarn appearance outweighs the benefits resulting from foreign-matter removal.

The effects of seed-cotton cylinder cleaners on lint grade, yarn strength, and yarn appearance are shown in figures 6–4 and 6–5. As the number of cleaning cylinders increases, the lint grade usually increases. The cleaning efficiency of each cylinder is relatively constant; less foreign matter is removed and less grade improvement is expected from each succeeding cylinder. Twelve to fourteen cylinders are considered adequate when two lint cleaners are used and the cotton is dried to the 5- to 7-percent fiber moisture level. The first cleaner should not have more than seven cylinders, to prevent roping of inadequately dried seed cotton. The yarn strength decreases steadily as the number of cleaning cylinders increases.

For cleanly picked cotton, the yarn appearance curve also shows a steady downward trend because of the machined effect, whereas the machine-picked cotton curve shows an upward trend because of foreign-matter removal, until the machined effect overrides the foreign-matter effect at about 13 cylinders.

The effect of lint cleaning on lint grade, yarn strength, and yarn appearance is shown in figure 6–6. Lint grade classification shows some grade increase as the number of lint cleaners increases, but each succeeding lint cleaner gives less grade improvement than the preceding one. In addition to removing fine trash, the lint cleaners often blend Light-Spotted cotton so that it passes into the White grades. The lint cleaners also remove some short fiber. Hand stapling and machine measurements often show a slight increase in length. This length increase usually reduces manufacturing waste but has little, if any, effect on yarn strength.

Yarn appearance is usually affected adversely by lint cleaner treatment. The effect is usually slight when only one or two lint cleaners are used, but appearance declines rapidly as additional cleaners are used.

The overall effect of ginning processes on grade and yarn quality is shown by figure 6–7. This chart shows the effects of gin drying and four different combinations of machinery on lint grade and yarn quality. Because of the usually rapid decline in lint grade improvement and in yarn quality after the 14-cylinder and 2-lint-cleaner combination is used, that combination is recommended as the maximum ginning machinery compatible with acceptable yarn quality. Use of this machinery combination results in little grade improvement in low-moisture cotton as compared to high-moisture cotton, whereas the spinning quality of low-moisture cotton rapidly decreases as additional machinery is used.

SECTION 7.—MISCELLANEOUS CONSIDERATIONS

Fuel Value of Gin Wastes

By ANSELM C. GRIFFIN, JR.

The fuel value of a material is also known as its calorific value, heat content, or heat of combustion. All these terms refer to the amount of heat liberated by a unit mass of a material when it oxidizes. The gross heat of combustion may be obtained by using an oxygen bomb calorimeter; the gross value is then converted to a net heat of combustion value at normal atmospheric pressure. The net heat of combustion value is thus considered the same as fuel value.

Heat of combustion values were determined in 1973 at the U.S. Cotton Ginning Research Laboratory, Stoneville, Miss., for gin wastes from machine-picked cotton harvested from mid-October to mid-December (table 7–1). These values may be considered typical for Upland cotton, and the mean value of 7,928 Btu per pound is useful as an overall average for dry ginning wastes.

To apply these data, one must take into account the moisture content of the material at the time it is incinerated. For example, if the boll hulls have a moisture content of 16 percent when cotton is ginned, their fuel value would be less than the tabular value of 8,194 Btu per pound. The proper value may be easily found by converting the moisture content (wet basis) to moisture regain (dry basis) and making a correction to the tabular value by using equations 1 and 2.

Moisture content (M) may be converted to moisture regain (R) by the formula

$$R=100M/(100-M), \qquad (1)$$

where R=moisture regain (dry basis) in percent

and M=moisture content (wet basis) in percent.

For example, when $M=16$, $R=1600/84.0=19$.

The fuel value of ginning wastes at a specified moisture content may be calculated from table 7–1 by using the formula

$$H_R=100H_D/(100+R), \qquad (2)$$

where H_R=fuel value at specified moisture regain in Btu per pound,

H_D=fuel value of dry material (table 7–1) in Btu per pound,

and R=moisture regain in percent.

For example, when boll hulls have a moisture content (wet basis) of 16 percent, their fuel value will be $H_{19}=819{,}400/119.0=6{,}886$ Btu per pound. Thus, the moisture content of hulls may have a considerable effect on their fuel value.

The fuel value of other types of ginning wastes at the time of incineration may also be calculated by using equations 1 and 2. If we arbitrarily assume certain moisture contents for the materials listed in table 7–1 and calculate their fuel values on that basis, more realistic values are obtained (table 7–2).

TABLE 7–1.—*Heat of combustion values for dry specimens of cotton-gin wastes from machine-picked cotton, Mississippi Delta crop of 1973*[1]

Type of waste	Heat of combustion[2] (Btu/lb)
Leaf	7,831
Lint	7,758
Sticks, stems, and hulls	8,194
Mean	7,928

[1] Average of samples from 3 harvestings collected at 6 locations within the gin.

[2] Net value equivalent to fuel value.

TABLE 7–2.—*Fuel value of cotton gin wastes at specified moisture contents, Mississippi Delta machine-picked cotton, crop of 1973*

Type of waste	Moisture content (pct)	Fuel value (Btu/lb)
Leaf	12	6,893
Sticks, stems, and hulls	16	6,886
Lint and motes	11	6,902

TABLE 7–3.—*Type and quantity of ginning wastes and their fuel values obtained from Mississippi Delta spindle-picked cotton and Texas High Plains stripper-harvested cotton per 500 pounds of lint ginned*

Type of waste	Spindle-picked			Stripper-harvested		
	Quantity[1] (lb)	Moisture content[1] (pct)	Fuel value[2] (Btu)	Quantity[1] (lb)	Moisture content[1] (pct)	Fuel value[2] (Btu)
Leaf	21	12	144,800	100	11	696,700
Sticks, stems, and hulls	35	16	241,000	570	12	4,111,400
Motes and lint-cleaner waste	42	11	289,900	30	10	209,500
Total	98	...	675,700	700	...	5,017,600

[1] Estimated from various laboratory observations.
[2] Rounded to nearest hundred.

Because ginnery production rates are customarily measured in units of bales per hour, it is useful to calculate ginning waste fuel values in units of Btu per bale so that these data may be readily converted to Btu per hour by simply multiplying the per-bale heat content by the ginning production rate. Thus, it is necessary to take into account the actual quantities of gin wastes as well as their type and moisture content. For example, a typical machine-picked bale in the Mississippi Delta area might contain about 100 pounds of waste, of which about one-third would be sticks, stems, and hulls at a 16-percent moisture content; whereas, a stripper-harvested bale might contain 700 pounds of waste, with about 570 pounds being sticks, stems, and hulls at 12-percent moisture (table 7–3). By applying the data of table 7–1 to typical ginning wastes and using equations 1 and 2, the wastes from first-pick spindle-harvested and stripper-harvested bales may be shown to have fuel values of approximately 675,700 and 5,017,600 Btu, respectively.

A quick method of estimating the fuel value of ginning wastes is to multiply the estimated quantity of ginning waste by 0.87 (to adjust for moisture content) and by 7,900 (an overall value for the fuel value of dry ginning wastes). Thus, 98 times 0.87 times 7,900 gives 673,600 Btu as the fuel value for gin trash from a bale of first-pick spindle-harvested cotton, and 700 times 0.87 times 7,900 gives 4,811,100 Btu as the fuel value of ginning waste from a bale of stripper-harvested cotton.

Fire Prevention Considerations

By J. E. VAUGHN

Cotton and cotton products are important links in the chain of our national economy and care must be exercised to preserve and protect this product of nature against needless loss. One peril causing staggering losses to this commodity each year is fire. Thus, fire prevention and fire protection are of ever-increasing importance in maintaining the position of cotton and cotton products at the marketplace.

Fire-insurance premiums on cotton gins and cotton products reflect the fire losses suffered by the industry. Preventing fires, then, is an important consideration in keeping insurance costs to ginners and manufacturers to a minimum, as well as in protecting employees from injury and avoiding economic dislocation in the community.

To prevent inordinate economic loss to individual ginners and plant owners in case a fire does occur, it is important that plant, machinery, and products be reevaluated periodically to determine that these values and investments are adequately insured. Consultation with the insurance carrier is advised on this and other matters pertaining to coverages.

Fire insurance inspection and rating organizations located throughout cotton-growing areas and insurance company underwriters should be consulted on matters pertaining to arrangement or layout, construction, hazard control, and protection. Standards prescribed for cotton

gins are fundamentally the same in all cotton-growing areas, but they may vary in detail.

Detailed information on the following items pertaining to fire prevention and protection may be obtained through the inspection and rating organization having jurisdiction in your State. For safety-to-life features and compliance with OSHA standards, you should consult with experts in those fields.

ARRANGEMENT OR LAYOUT

Auxiliary buildings.—These buildings should be located at a minimum of 40 feet (clear space) from the gin building.

Open cotton-storage yards.—These yards should be located at least 200 feet from gin yards or structures.

Entire gin plant.—The entire plant should be separated from outside exposures (structures not a part of the gin plant and highways) as far as is economically feasible.

CONSTRUCTION

Buildings.—Buildings should be constructed of fire-resistant and noncombustible material, securely erected. Buildings so erected have a materially lower fire insurance rate and maintenance cost. Floors, platforms, and decks, as well as auxiliary buildings and structures, should also be constructed of noncombustible materials.

Machinery.—All-metal machinery, installed in accordance with manufacturer's specifications and arranged so as to be readily accessible and free from congestion, should be used throughout.

POWER, LIGHTING, AND HEATING FACILITIES

Electric wiring and equipment.—Electric wiring and equipment should be installed in accordance with National Electric Code (NFPA No. 70).

Electric motors.—Unless separated from the ginning section to avoid dust and lint, electric motors of the type approved for class III (National Electric Code) should be used.

Internal combustion engines.—Internal combustion engines should be in a separate room, free from dust and lint. If liquid fuel is used, it must be supplied by pump and not by gravity. Exhaust should be discharged to outside of building with a minimum clearance from combustible material of 9 inches.

Fuel tanks and piping.—Fuel tanks and piping should be installed in accordance with the National Fire Protection Association's Standard No. 30, "Flammable and Combustible Liquids Code." If liquefied petroleum gas is used, comply with NFPA Standard No. 58, "Storage and Handling of Liquefied Petroleum Gases," and NFPA Standard No. 54, "Gas Appliances and Gas Piping."

Heaters.—Open-flame heaters should not be used. Inspection and rating organizations have detailed standards for suitable types of heating arrangements.

Hydraulic press fluids.—Only those hydraulic press fluids that have the proper quality and a sufficiently high flashpoint should be used. (U.S. Bureau of Mines has recommended certain fluids to avoid explosions and fires.)

SPECIAL HAZARDS

Trash disposal.—Gin trash (burs, sticks, etc.) should be collected in adequate, noncombustible hoppers, equipped with cyclone or other type separators. The trash should be removed as it accumulates. To avoid a sizable charge for improper handling, consult your inspection and rating organization for the proper type of equipment and location on gin premise.

Heating units for cotton driers.—Heating units for cotton driers should be installed in a separate room, free from dust and lint, in accordance with the manufacturer's specifications. Proper heat and fuel controls are necessary for fire prevention and quality control.

PROTECTION

Fire protection for cotton gins varies with the types of construction, the availability of water, and the economic factors involved in each case. Standards for outside and inside protection and the credits applicable for their observance are important data and are available at the State rating bureau.

Outside protection (public or private).—Standards for outside protection, including the amount of water available, the size of the mains, the number of hydrants, and the most practical layout arrangements, are described in detail by your inspection and rating organization.

Inside protection.—For inside protection, casks, pails, and approved types of portable

and wheeled extinguishers should be installed in required numbers (usually based either on area of building or on number of gin stands) and should be maintained as prescribed. Extinguishers are "approved" for the class of fires they are expected to combat, as follows: class A—ordinary combustible fire; class B—oil fire; and class C—electrical fire. See NFPA Standard No. 10.

Automatic sprinkler systems.—One important prerequisite for an automatic sprinkler system is an adequate water supply. Plans prepared by a qualified installer for specific systems should be submitted to the insurance inspection and rating organization for approval prior to installation and for field inspection after installation.

Fixed-type carbon-dioxide systems.—Fixed-type carbon-dioxide systems should be installed in accordance with prevailing standards. Plans prepared by a qualified installer should be submitted to the insurance inspection and rating organization for approval before installation and for field inspection after installation.

Inside standpipe and hose.—Where sufficient water is available, inside standpipes and hoses may supplement other protective devices. Consult your insurance inspection and rating organization for their recommendations.

Magnetic separators.—Magnets used shall be those listed by Underwriters' Laboratories, to assure proper strength. Locate as prescribed by the inspection and rating organization.

ADMINISTRATIVE PRECAUTIONS

For maximum efficiency of production and minimum fire hazard, premises should be kept clean and free of weeds and grass.

Machinery and equipment should be installed as prescribed by the manufacturer and by the insurance inspection and rating bureau and should be kept in good working order.

All employees should be trained in the proper use of all fire-protection equipment. In case of fire, first the alarm should be given, and then the rules learned in practice should be applied.

Congestion in yards by trailers and cotton products should be avoided. A recent development is to bring seed cotton onto the gin yard in modules containing 8 to 12 bales. Care should be exercised in arranging the modules in the yard and until Cotton-Belt-wide standards are developed, your insurance company underwriters should be consulted as to the preferable arrangement for a particular yard or situation.

If baled cotton is stored overnight, a minimum of 40 feet of clear space from the gin building should be provided.

"No Smoking" and "Restricted Smoking" signs should be posted in designated areas.

Every precaution should be taken to avoid fire-packed bales. When a bale is "suspect," all concerned should be notified.

Gin Safety

By J. H. Tony Price

Injuries to cotton gin employees are a direct result of unsafe work practices and unsafe conditions existing in the ginning operation. Employees must be motivated, and trained when necessary, to observe correct work practices, which will produce efficient operations as well as prevent injuries. A well-planned and carefully executed program with the objective of preventing injuries is as important to good ginning practice as any other factor in gin operation.

While safe practices and procedures must be adapted to fit individual gin operations, emphasis can be placed on two general areas: (1) inspection of machinery and facilities, and (2) establishment of contact with employees—to promote and maintain safe practices and conditions.

An initial inspection by management should precede the repair season. Unsafe conditions should be located and corrections made or the hazardous area properly identified if repairs or replacements are not possible. Inspection should be repeated periodically throughout the season, with employees encouraged to report all unsafe conditions they cannot correct.

The establishment of communication with employees must come from the management level and is best accomplished at the time the employee is hired. This personal contact can furnish the employee with his orientation to the particular gin operation. Continuous personal contact, making employees aware of management's interest in their well-being, is the next step in motivating employees to take pride

in their work and perform their jobs in a manner that will promote efficiency and prevent injuries. Weekly meetings with employees are an additional tool for keeping in touch with employees and bringing safe work practices to their attention.

SAFE WORK PRACTICES

Safe work practices that must be observed by employees in all gins include:

1. Wearing comfortable, close-fitting clothes. Sleeves should not be rolled and should fit snugly at the wrists. Gloves should not be worn in the gin.
2. Treating scratches, cuts, minor scrapes, and sprains immediately, and seeking professional care for major injuries. At least one employee should be trained in a certified first-aid course.
3. Keeping all work areas free of trash, debris, tools, and any objects that obstruct safe and normal passage. Tools should be returned to designated storage areas or racks as soon as they are no longer needed.
4. Cleaning up oil and grease slicks as they appear.
5. Permitting only qualified personnel to repair and adjust machinery.
6. Making sure that fellow employees are clear of machinery before power is turned on. Management should devise a lockout system that will prevent accidental start of machinery when repairs are in progress.
7. Seeing that all guards and covers are replaced before a machine is started.
8. Stopping machinery before changing belts. Belts should not be thrown on or off while machinery is running, but rolled onto pulleys and flywheels by hand. Extreme caution must be used in this operation.
9. Raising gin breast before dumping seed rolls. Seed should be raked out with a stick when rolls are dumped.
10. Stopping gin stand before cleaning air nozzles. Gin stands should not be operated with exposed saw cylinders.
11. Keeping fingers at least 6 inches from saw cylinders. When work on saws is necessary, the power should be shut off. Panels, doors, or guards should be removed or opened only after the saw shafts have stopped turning.
12. Keeping press doors closed until the ram stops. Tramper foot should not be cleaned while it is in motion and tramper belt should not be guided by using a stick or rod while it is in motion.
13. Seeing that turning press is carefully watched and employees in area are warned of movement. Presses not equipped with power turning devices should be pushed with hands and not shoulders.
14. Using ladders to enter and exit trailers. Employees handling trailers should not attempt to guide the trailer tongue by hand and should stand with their feet clear while handling the tongue. There must be close visual coordination between tractor driver and yardman where trailers are being hooked, moved, or parked.
15. Seeing that motors are shut off while refueling vehicles.
16. Permitting no riders other than operator on yard tractors.

SAFE WORK CONDITIONS

Safe work conditions to be maintained in cotton gins include:

1. Machinery must not be allowed to operate with worn parts, cracked belts, or defective chains. Loose fittings and couplings must be corrected. An unsafe condition which cannot be corrected or repaired immediately should be brought to the attention of employees who will be working in the area.
2. Basic first-aid supplies in a dust-tight enclosure should be readily available to all employees.
3. Line shafts and conveyors that cross normal walkways must be covered. Those at floor level, unless guarded by location which will prevent access, should be covered with removable grids or plates that will support a minimum weight of 250 pounds.
4. Firefighting apparatus designed for extinguishing textile or electrical fires should be located in clearly marked areas that have easy access. The condition of the extinguisher must be inspected frequently.
5. All belt and chain transmissions should be guarded to a height of 7 feet above working levels.
6. Guards should be of strong enough construction so as not to give way or collapse when leaned on or shoved against.
7. Drives between gin stands may be guarded by barriers which will prevent accidental or intentional access into the areas.

8. Projecting shaft ends must present a smooth edge and end and not project more than one-half the diameter of the shaft unless guarded by nonrotating caps or safety sleeves.

9. Gin stands must be provided with a permanently installed guard designed to preclude contact with the gin saws while in motion.

10. Moving saws on lint cleaners having access doors to the saws must be guarded by bar or grid-type barrier guards that will preclude contact of fingers with saws.

11. A device must be installed on all bale presses to prevent the upper gates from being opened while the tramper is operating.

12. Top panels of bur extractors must be hinged and equipped with a positive latch.

13. A warning device to sound an audible signal before the gin is started must be installed in all gins.

14. Catwalks and other elevated work surfaces or passageways must be equipped with guardrails and toe boards. Newly constructed guardrails should have a top rail 42 inches above the work surface and a midrail. Toe boards 2 to 6 inches in height must be installed on surfaces 6 feet or more above normal working or passage areas.

15. Stair rails should consist of a top rail 30 inches vertically above the nose of the tread and a midrail.

16. Ladders should support at each rung a minimum concentrated load of 200 pounds. Cages must be provided on ladders more than 20 feet in height.

☆ U.S. GOVERNMENT PRINTING OFFICE : 1977 O—232-824

U. S. DEPARTMENT OF AGRICULTURE
AGRICULTURAL RESEARCH SERVICE
HYATTSVILLE, MARYLAND 20782

OFFICIAL BUSINESS
PENALTY FOR PRIVATE USE, $300

POSTAGE AND FEES PAID
U. S. DEPARTMENT OF
AGRICULTURE
AGR 101