487
Ag84Ah
C2

268.44: 332.3:249
Serial Library

Agriculture Handbook No. 487
U.S. Department of Agriculture
Forest Service

1977 APR 23 P 5

Mechanical Methods Of Chaparral Modification

Library
Forestry Sciences Laboratory
P. O. Box 909, Juneau, AK 99801

Mechanical Methods of Chaparral Modification

George A. Roby, District Ranger,
Arroyo Seco District, Angeles National Forest
and
Lisle R. Green, Supervisory Range Scientist
Pacific Southwest Forest and Range Experiment Station

Agriculture Handbook No. 487
April 1976

U.S. Department of Agriculture

Forest Service

Roby, George A., and Lisle R. Green

1976. Mechanical methods of chaparral modification. U.S. Dep. Agric., Agric. Handb. 487, 46 p., illus.

Chaparral modification is undertaken for a variety of land-management purposes. To help land managers in selecting equipment and methods for such work, practitioners in county, State, and Federal modification projects were asked for evaluations of equipment and techniques they had used. This handbook describes the alternative techniques and equipment, provides information on operations, reports production rates and on-site costs, and explains the advantages and limitations of equipment used for brush crushing, compacting, chopping, and shredding and for grass seeding. Tools for hand methods of clearing and stump sprout control are also described.

Oxford: 432.17:332.3—087:187x424.5(794). Key words: chaparral, fuel modification equipment, fuel management, California.

Contents

	Page
PREFACE	iv
SUMMARY	v
INTRODUCTION	1
CRUSHING AND PILING EQUIPMENT	3
Bulldozer Straight Blade and Tomahawk Crusher	3
Brush Rake	5
Chains	9
Modified Chain Between Two Tractors	11
Ball and Chain	16
CHOPPING AND SHREDDING EQUIPMENT	23
Brushland Disks	23
Roller Chopper	29
Tritter Brush Shredder	31
HAND TOOLS FOR BRUSH CLEARING AND STUMP SPROUT CONTROL	32
Cutting and Piling	32
Stump Treatment	33
GRASS SEEDING EQUIPMENT	35
Rangeland Drill	36
Hand Seeding	37
Aerial Seeding	37
CONTRACT RECOMMENDATIONS	37
LITERATURE CITED	39
APPENDIX A Comparative Specifications of Industrial Track-Laying Tractors	41
APPENDIX B Suggested Form for Summarizing Costs of Chaparral Modification	43
APPENDIX C Relation of Production Rate to Swath Width and Speed of Implement	44
APPENDIX D Contract Specifications for the Modified Chain	45

Preface

This handbook brings together the experience gained in a variety of chaparral modification projects. Such sharing should make for better planning and more efficient use of limited funds. The handbook is designed to help land managers who must select equipment and methods for chaparral management work. It presents the alternatives, gives advice on operations, reports average production rates and costs, and points out the advantages and disadvantages of the equipment described. All the conclusions are based on direct consultation with those who conducted projects on the ground and on the experience of the authors. Most of those who reported were interviewed face to face by the senior author; a few gave us information by telephone or mail.

Reports were gathered from 19 projects representing five agencies. We are indebted to the following persons for the information they provided:

From the USDA Forest Service, California Region, Angeles National Forest: Gilbert H. Easter, Gordon N. Foster, William Harper, Woody Hite, Jack Lane, Gordon Rowley, David G. Spiro, Jesse C. Yarbrough; Cleveland National Forest: Harold Allum, Lawrence Compton, Thomas E. Lundgren, Robert Parker, Richard F. Raybould, Robert Robbins, Lowell Smith, Marvin Stout, Richard Wenstrom; Los Padres National Forest: James W. Acton, Mark L. Linane, Robert Nelson, Robert Righetti; Mendocino National Forest: John Lorenzana, Paul T. Meischke; San Bernardino National Forest: Donald Adams, Franklin A Gaddy, E. L. Richardson, Daniel J. Swearingin, Patrick L. Wassell; Stanislaus National Forest: Riley Gilkey; San Dimas Equipment Development Center, Dan W. McKenzie.

From the U. S. Bureau of Indian Affairs: Glenn I. Ehrlich; the California Division of Forestry: John W. Gray; the Los Angeles County Fire Department: Russell Stallings; and the San Diego County Department of Agriculture: Karl Baker, Roy Kepner, Gary Reece.

This report necessarily identifies some equipment by the manufacturer or trade name. The evaluation given here is based solely on reports of users in particular projects. Use of trade names is for information only and does not constitute endorsement by the U. S. Department of Agriculture to the exclusion of other equipment not mentioned.

Summary

Chaparral modification activity has increased in recent years. This work has among its objectives reduction of fire hazard, more grazing for livestock and deer, habitat improvement for wildlife, and greater water yield. To help resource managers benefit by the experience of others, we asked workers on 19 chaparral modification projects for county, State, and Federal agencies in California about the equipment and techniques they used. Data on production rates and costs were requested, together with advice on sizes and types of equipment, capability, and safety precautions.

Equipment for land clearing by crushing and compacting brush, usually in preparation for burning, included the straight-blade bulldozer, the bulldozer with Tomahawk crusher, the brush rake, and the chain, used between two tractors or with a steel ball and one tractor.

The tractor with straight bulldozer blade is valuable for crushing brush in preparation for burning. The "Tomahawk" compactor crusher increases the production rate by in effect widening the tractor treads to the full width of the tractor. The tractor with brush rake is useful for uprooting and piling brush for burning. Costs in 1973 varied from $25 to $65 per acre in light brush, depending on steepness of slope, to $100 with heavy brush on steep slopes. Costs were nearly doubled when considerable oak was present.

Brush can be prepared for burning on favorable terrain by one or more passes of an anchor chain drawn between two large tractors or between a tractor and ball. Chain length depends on tractor size, chain and ball weight, and terrain. Best crushing, chopping, and uprooting of brush occurred when the chain was modified by welding crossbars across every link, or every third link. Bars welded only on alternate links are parallel and uproot less brush. When the modified chain is used with two tractors, a swivel at each end is connected to a few feet of smooth chain attached to the tractor. The modified chain was found effective in all mature chaparral types. Two passes, one in each direction, prepared the brush for safe burning; one pass may be enough. Two passes can be made at a rate ranging from 1 to 6 acres per hour, depending on terrain and brush size and density.

The ball and chain are used on steep side slopes below a ridgetop. A steel ball, 5 feet in diameter, is filled with water, or water and gravel. A D-8 size tractor is generally used. By moving along the ridgetop, towing the ball, the tractor crushes brush on the slope in a swath about half the length of the chain. Mature chamise chaparral was found most susceptible to crushing. Tough species, particularly oaks, did not crush well. Late summer or fall was the best season. Production was greatest on slopes of 50 percent, or steeper.

Equipment for land clearing by chopping or shredding brush so as to form a mulch included the brushland disk, roller chopper, and Tritter shredder. In the lighter fuels, prescribed burning is usually not necessary, but in heavy fuels follow-up burning may be indicated.

Brushland disks weighing 8,000 to 11,000 pounds have impressed observers with their effectiveness in mulching light brush with one pass, or heavy brush with two or three passes. Tractors of 130 to 270 net flywheel horsepowers were recommended for these disks. One pass generally required about an hour per acre, and subsequent passes, less.

Roller choppers, 8 to 10 feet wide, and weighing up to 37,000 pounds filled with water, appear useful in most fuel types if slopes are less than 20 percent. They effectively mulch light brush fuels, but burning is necessary in medium to heavy fuels unless several passes are made. Little production data were available.

Several brush beaters or brush shredders have been tried over the years. The latest, called the Tritter, was developed in Australia. Considerable modification has been required, but medium manzanita (about 5 feet tall, and dense) was shredded at a cost of $35 to $40 per acre on slopes under 35 percent. Burning is not usually necessary following the shredding, but sprout control with herbicides is indicated, as root crowns are not removed.

Clearing brush by hand becomes necessary under some situations in spite of the great cost. One hundred to 110 man-hours are required to cut and pile

an acre of light brush, and 250 to 300 man-hours per acre of very heavy brush. Costs of clearing medium brush are perhaps $750 per acre; light brush costs are half that amount and heavy brush as much as twice. The Homelite brush cutter, which features a motor carried in a pack on the operator's back, and a circular saw at the end of flexible drive shaft, was credited with speeding up hand cutting. Cut stumps are usually treated with herbicide to prevent sprouting. The most convenient tool is a sponge attached to a drip torch. There is no waste and no chance of drift.

Grass seeding equipment includes the rangeland drill and Cyclone seeders. The drill is effective when used on the contour on moderate slopes. Production rates are from 1 to 3 acres per hour, and costs from $8 to $25 per acre, depending on conditions. Battery-powered Cyclone seeders may be mounted on an all-terrain vehicle. For hand seeding, a Cyclone seeder with metal hopper is generally preferred, with seeding rates ranging from 1 to 2 acres per hour. Aerial seeding by both helicopter and fixed-wing aircraft is economical for large areas.

Introduction

The modification of chaparral is an increasingly important land management activity. Chaparral, as the term is used here, refers to dense stands of evergreen, shrubby vegetation. They are dominated by species that sprout vigorously after their aboveground parts are removed, and many of these species, as well as nonsprouting species, regenerate strongly from seed.

Chaparral modification is undertaken for various reasons, and the term covers operations ranging from relatively light thinning of brush to a virtually complete conversion from brush to grass. The information in this handbook was gathered primarily from projects that are part of an effort to combat the severe fire problem presented by chaparral lands in southern California. Modification has other values, however; it may provide forage and improved cover conditions for wildlife, grazing area for livestock, and improved conditions of soil cover and water use. It may also increase recreational values.

This handbook will be useful primarily to the land manager who must choose equipment to carry out a chaparral modification prescription. His choice is limited by the environmental analysis that has preceded the prescription, and also by the available funds and manpower. In selecting methods and equipment, he must recognize that results cannot be precisely estimated in advance. Even though he may expect to avoid prescribed burning, for example, he may find eventually that it is necessary after all. Again, he must realize that no one piece of equipment or technique is suitable for use over an entire project. Physical conditions and environmental concerns vary. The best combination to accomplish the desired objectives must be found.

For a long time, various agencies and individuals in southern California have been engaged in chaparral modification, and the pace of this work has quickened during the recent past. Much time and money has been spent, sometimes in a trial-and-error process, to develop tools and techniques that can accomplish desired results. Had project workers been able to benefit from others' experience, costly repetition of mistakes might have been avoided. This handbook is intended to prevent such duplication of effort by bringing together information gained at first hand from project workers. The successes and failures of others will guide the land manager's thinking and strengthen his decisions.

The plan of this handbook reflects the emphasis used in gathering data. Those who had used a particular kind of equipment were asked about its usefulness, for helpful advice on techniques they had employed, and about safety precautions to be observed. Average rates of production were sought for the various kinds of equipment, because land managers and planners indicated they could compute their local costs from these rates.

In reporting the results of our interviews, we have tried to stress the judgment of the majority. Differences of opinion were noted among project workers as to objectives and expectations, such as the definition of an "adequate job" with a certain piece of equipment. What pleased one manager was not clean enough to satisfy another. Consequently, extra passes with the equipment or follow-up burning were required by some managers but not others.

Variance in results was also a reflection of the operators' and managers' general lack of experience with the different types of equipment. It was difficult to find contractors and operators experienced with tools such as the brushland disk, ball and chain, or anchor chain. As we continue to use this type of equipment under wildland conditions, effectiveness and efficiency should improve for each method.

The handbook is devoted primarily to equipment used for land clearing in brushland. Hand methods are also discussed, including techniques for stump sprout control. Equipment used for grass seeding is briefly treated, and some recommendations for contract specifications are made.

The descriptions of the major types of equipment used in land clearing are grouped broadly according to the operation they are usually called upon to perform. Although there are no precise limits to the capabilities of a particular piece of equipment, some types are used primarily for crushing and piling brush in preparation for burning, and others

primarily for chopping and shredding brush to form a mulch that can be incorporated into the soil.

Because equipment efficiency is frequently linked to tractor size, information on this point follows the description of each equipment type. Most contracts are being written in terms of engine horsepower, or net horsepower at the flywheel, but horsepower at the drawbar is sometimes specified. This is roughly 20 percent less than flywheel horsepower for tractors commonly used in chaparral modification. A list of tractors and their horsepower is given as Appendix A.

The capability of the equipment, including such considerations as equipment performance under various conditions of vegetation, slope, and rockiness, and equipment maneuverability, is discussed in some detail. Then the range of production rates and costs reported by project workers is given. Precise data on production rates and costs were difficult to secure because of the variety in record-keeping methods. Most users of the equipment were trying to arrive at some figure for cost per acre or total job cost, but frequently the rate of production of a piece of equipment or the cost of swampers or of vehicles was hard to separate out of "total or other costs." Sometimes the separate costs could only be estimated.

The cost data given should be helpful for broad planning needs. Costs presented are the direct, or on-site costs in 1973. Not included are indirect costs such as mileage to and from a job, expense of moving to a work site, supervision and planning, and the cost of the environmental analysis reports, necessary in most current projects. These were estimated separately at 40 to 50 percent of on-site costs, and should be added to the direct costs when total project costs are needed.

For work planning, good data on rate of production are essential. Included as Appendix B is a form used for information gathering for this report. This, or a similar form, could improve record keeping and work planning.

In computing production rates and costs, percent slope and the volume of brush must be considered. A useful indication of volume is the fuel or vegetation type, as classified in the U.S. Forest Service California Region *Fireline Handbook (11)*. To some of the types designated, we have added quantitative estimates as follows:

7— Light to medium chamise, fuel loading generally 5 to 15 tons per acre, dry weight.
8— Brush mixtures with sage, frequently the coastal sage type, fuel loading generally 5 to 15 tons per acre.
11— Medium brush and oak, from 10 to 25 tons per acre, not including oak trees.
12— Heavy pure manzanita, chamise, or buckbrush, 20 to 30 tons per acre.
13— Heavy mixed brush, 20 to 35 tons per acre.
14— Heaviest mixed brush, 30 to 45 tons per acre.

These fuel type designations are used in the tables of production rates and costs.

As a general rule, the production rate of a piece of equipment can be estimated from the width of its swath and the speed at which it can be operated. A graph showing this relationship is given as Appendix C.

Some miscellaneous suggestions made by the project workers we interviewed have been included in the section titled "Comments." Special safety precautions and a comparative listing of the advantages and disadvantages of the equipment type are included. In this listing, features often mentioned as affecting choice of equipment were considered. These include the degree to which the topsoil is disturbed, the amount of soil left in piles, the degree to which plants are uprooted rather than merely broken off at the surface, the amount of soil left on the ground to absorb moisture and preserve nutrients, and the degree to which erosion may be encouraged.

Although every effort has been made to achieve reliable evaluations of the equipment described, all land managers will recognize that success with any piece of equipment depends strongly on field conditions and on the skill of the operator. Proper planning and supervision are essential.

Crushing and Piling Equipment

Under certain conditions of terrain, climate, and brush type, the indicated treatment for chaparral modification may be to crush and compact the brush. Prescribed burning is usually a follow-up procedure, and the crushing equipment may also gather the material into piles or windrows for burning. If brush is light, however, burning may not be necessary.

The most widely used types of equipment are the bulldozer straight blade, with or without the Tomahawk crusher; the brush rake; the chain between two tractors; and the ball and chain; all discussed below. A large I-beam or railroad rail pulled behind a tractor is sometimes used to crush brush, with the long axis of the beam at right angles to the direction of travel. The practice has been recommended for uprooting big sagebrush (*Artemisia tridentata*) in the Intermountain Region, but on the basis of limited information available to us, railing does not seem well suited for chaparral brush clearing. It may be effective in mature light fuels such as coastal sage species. A small area of light chamise in Los Angeles County (Rowher Flat) was railed with disappointing results, however. The practice was suggested as a means for covering seed, but no one in southern California seems to have used a rail for this purpose.

Bulldozer Straight Blade and Tomahawk Crusher

The use of straight bulldozer blades for clearing and piling brush is less frequent today than it once was in chaparral modification, because they often disturb the topsoil and mix an excessive amount of soil with the piled brush. Bulldozers with specialized blades are usually more effective.

The straight blade is sometimes used for compacting and crushing mature brush for broadcast burning, however, and could be more widely used for this purpose. The straight blade is raised a foot or two above the ground to knock the brush over or break it off just above the ground. The tractor tracks supply crushing action.

The Tomahawk crusher, which was designed for breaking up roadbeds, improves the crushing action of crawler tractors. It has been successful in coniferous forest precommercial thinning, and has been tried in brushfields in preparation for burning.

The Tomahawk consists of a series of spirally placed rings on an arbor 10 3/4 inches in outside diameter (fig. 1). The rings are 24 inches in outside diameter and are armed with protruding cutter and crusher segments. The Tomahawk comes in widths up to 9 feet, but the 6-foot model has been used more than the others, perhaps because it is the size needed to crush between tractor tracks. A hydraulic frame allows mounting on a bulldozer blade, or behind a tractor. The Tomahawk effectively extends the tractor tracks to the full width of the tractor. Thus, it can increase the tractor crushing rate by reducing the number of passes needed.

Tractor size required

The most commonly used tractor for crushing with the bulldozer blade is the D-7 or D-8 (180-275 net hp at flywheel). The blade width varies from 12 to 14 feet. The wider blades are somewhat more efficient in good terrain, but transportation may be inconvenient because of load width limitations.

Capability

The tractor with bulldozer blade is effective in crushing all vegetative types, except young flexible brush, on side slopes up to approximately 30 to 35 percent. Effectiveness varies, of course, with the rockiness of the site.

Small rocks do not interfere with the crushing operations, but rocks more than a foot high are a nuisance, can be dangerous, and decrease the amount of effective crushing. Large scattered boulders and rock outcroppings require special attention by the operator, but are not ordinarily troublesome.

The Tomahawk is most effective in mature, brittle brush. On the Groveland Ranger District of the Stanislaus National Forest, where some thinning slash was crushed, dry slash crushed much better than green; much of the fines were broken up and mulched into the soil, thus reducing fire hazard. In Oregon's ponderosa pine type, Dell and Ward (*3*) thought highly of the Tomahawk as a useful tool for reducing fire spread potential and resistance to control in both green and dry thinning slash.

F-522970

Figure 1.—The Tomahawk compactor-crusher effectively extends the crushing action of tractor tracks to the full tractor width.

Production rates and costs

Based on data from the Mendocino National Forest, production rates and costs of crushing with the bulldozer blade are estimated as follows:

Percent slope	Fuel type	Acres per hr	On-site costs, dollars per acre
0-30	12	3.0	12
0-30	13	2.5	14
0-30	14	2.0	17

Here the cost of a D-8 tractor and operator was $35 per hour; swamper was not included. The Mendocino experience agrees closely with rates and costs previously published (*7*), when these are equated to 1973 costs by a 40-percent upward adjustment.

Although little information is available as to on-site costs and rates of production for the Tomahawk, these should be slightly better than for crushing with tractor only, because of the increased crushing area.

Brush Rake

Many sizes and variations of brush rakes, root rakes, and rock rakes are available (*13*). Most rakes are commercially produced but some are homemade. Results reported with the various types are generally similar, but rakes with the least amount of blade surface appear to rake cleanest and are most efficient (fig. 2).

The sizes of rakes used vary from 12 to 14 feet. The wider rakes increase the production rate slightly, but transporting them may be difficult because of load width limitations. The wide blades must be hauled separately from the tractor.

Several types of brush rake attachments are available for regular bulldozer blades. These attachments are not considered equal to the brush rakes and rock rakes but have definite advantages over the straight blade. The rake attachments are helpful when a single tractor is used for roadwork, drainage, or grading in conjunction with the chaparral modification. Once the operator finishes clearing and stacking brush, he removes the attachment and in a few minutes is ready to use the straight blade (fig. 3).

Tractor size required

Brush rakes are generally mounted on tractors in the D-7 or D-8 range (180-275 hp). San Diego County workers reported that in one instance a D6-C

F-522971

Figure 2.—Brush rakes with the least amount of blade surface pick up a minimum of soil with the brush.

Fleco Corporation

Figure 3.—Brush rake attachments are generally less effective than brush rakes. They are useful, however, in projects where one tractor must be used for several kinds of work.

equipped with brush rake was better than larger equipment. It could be maneuvered under and around large oak trees in county parks with less damage to soil and vegetation than a D-8, particularly on steeper slopes.

Capability

The brush rake is highly effective in all fuel types, except perhaps very light brush (light sage and very light chamise), which tends to slip through the rake. Welding a root grubber across the rake tips could possibly overcome this problem (fig. 4). The rake is superior to the bulldozer blade in that less topsoil is scalped off and left in the piles. The actual amount of soil in the piles varies greatly depending on the skill of the operator.

With the brush rake, as with most other fuel modification equipment, there seems to be a strong tendency for both the operator and the project foreman to do "too clean" or "too neat" a job. This may be prompted at times by a desire to avoid follow-up sprout control treatment, an objective generally not achieved. In some brush rake projects, too little debris was left on the soil surface and the jobs were unnecessarily expensive. There was insufficient organic material remaining for raindrop energy dissipation and for reduction of overland flow during intense rainstorms. Much of the nutrients essential for plant growth in arid situations are tied up in

San Diego County Department of Agriculture

Figure 4.—A root grubber welded across the tips of a brush rake uproots or cuts off small or flexible shrubs that would otherwise not be removed.

small twigs, leaves, and herbaceous plants. Moving all such material to piles for burning prevents recycling of these nutrients in place, and they are lost in the atmosphere or in the soil erosion process. A less productive site and cost escalation are products of such misdirected zeal.

Small rocks do not appear to cause difficulty. Larger rocks—those that do not pass through the rake—slow production and are hard on equipment. The brush rake can work around large boulders and trees and can be more selective than some other types of equipment, such as the modified chain. Also, it is not difficult to leave an irregular edge, for visual effect (fig. 5).

Because excessive amounts of soil are left in the piles when soil is wet, raking should not be done until soil is dry enough to fall freely as the brush is moved along.

The maximum sidehill limitation is 30 to 35 percent for most brush rake operations. This limitation varies with the amount of rock, the soil conditions, and the prescription dictated by the environmental analysis.

Production rates and costs

The production rates reported varied from project to project. Rates of production in the lighter fuels ranged from 0.5 to 1.5 acres per hour, and in

F-522972

Figure 5.—Brush rakes can leave a clean seedbed and brush piles relatively free of soil. The irregular edge of brushfield is good for wildlife and for visual effect.

the heavier chaparral fuels from 0.2 to 1.0 acres per hour, the accomplishment decreasing as the slope increased (table 1).

On-site costs varied from $23 to $68 per acre in the lighter fuels and from $34 to $150 per acre in the heaviest fuels, not including large oak trees (table 1). These cost figures do not include burning of brush piles.

Comments

Advantages and disadvantages of the tractor with brush rake may be summarized as follows:

Advantages

1. Maneuverable around trees and boulders, in drainages, etc.
2. Effective for creating irregular edge effect—scalloping, feathering , etc.
3. Allows varying degrees of cleanup according to esthetic effects desired.
4. Produces piles or windrows for burning. Less manpower is needed than for broadcast burning. Piles may be covered until burning conditions are favorable. Some piles may also be left for benefit of wildlife.
5. Leaves less soil in burn piles or windrows than straight bulldozer blade does.
6. Economical to move between jobs, compared with heavier equipment.
7. Usually leaves a good seedbed.
8. Removes some roots and root crowns, reducing sprouting.

Disadvantages

1. Limited in application by slopes and soil conditions.
2. Can be relatively costly in thick brush or in steep or rocky terrain.
3. Can cause problems in burning operations; excess soil in piles makes mop-up difficult.
4. May stir and loosen topsoil, compact soil, or channel runoff water, thereby increasing erosion potential of heavy, long-lasting storms.
5. Encourages too thorough cleanup—not enough debris is left for energy dissipation of rainfall and runoff and for adequate nutrient recycling.

TABLE 1.—Estimated production rates and on-site costs[1] for brush rake clearing on two National Forests, in various fuel types[2]

Project	Percent slope	Types 7, 8		Types 11, 12		Type 13		Type 14		Type 14, with oaks	
		Acres per hour	Dollars per acre	Acres per hour	Dollars per acre	Acres per hour	Dollars per acre	Acres per hour	Dollars per acre	Acres per hour	Dollars per acre
Cleveland N.F.											
Palomar R.D.	0-25	1.5	23			1.0	34	1.0	34		
	25-35	1.0	34			1.0	34	1.0	34		
	35+	.5	68			.5	68	.5	68		
Trabuco R.D.	0-25	1.3	27								
San Bernardino N.F.											
San Jacinto R.D.	0-25			0.6	50	.5	60	.4	75	0.3	100
	25-35			.5	60	.4	75	.3	100	.2	150
	35+			.4	75	.3	100	.2	150	.1	300
San Gorgonio R.D.	25-35					.4	70				
Average	0-25	1.4	25	.6	50	.8	47	.7	55	.3	100
	25-35	1.0	34	.5	60	.6	60	.7	67	.2	150
	35+	.5	68	.4	75	.4	84	.4	109	.1	300

[1]Cost estimate covers tractor, operator, and swamper. To include mileage, planning, overhead, etc., add 40 to 50 percent.
[2]Fuel type designations are from USDA Forest Service, California Region, *Fireline Handbook* (*11*).

Chains

Chains have been used in some phases of land clearing for many years, but not until surplus Navy anchor chain became available were chains used much in California chaparral modification. Some 12 to 15 years ago, attempts were made to compact and crush brush for burning by dragging anchor chains across brushfields between two tractors. Some good results were reported (*4, 8*). Recently, chaining has been more widely used, both with two tractors and using a metal ball with one tractor on steep slopes.

Both smooth chains and chains modified by welding steel crossbars across the links are used. In general, users reported that the modified chain is more effective in dragging brush out of the ground.

Anchor chain, usually available only through Navy surplus outlets, comes in various weights and in 90-foot lengths called "shots." If each shot of chain is cut in half and a Navy master connector link is inserted, the chain may be lengthened or shortened by 45-foot increments. The flexibility thus obtained has made chaining more effective on some projects, because the chain length and weight could be adjusted to fit terrain, obstacles, and tractor size. The chain was also easier to handle. In general practice, various lengths of chain are used, depending on availability and the requirements of individual projects.

Chain modification

Chain modification with steel crossbars was carried out by the Bureau of Land Management in 1966 (*2*). Their "Ely" chain, used in Nevada and New Mexico, was the model for modified chains being used in California.

Best results with the modified chain appear to be gained when the bars are at 90° angles to each other on the chain (fig. 6), as they are when welded on every link or every third link. Bars are parallel if welded on alternate links. When the bars are at 90° angles with each other, they tend to "walk" and roll along, crushing, chopping, digging, and sometimes pulling out the brush. When they are parallel, they tend to slide along and over the brush.

The Ely chain used railroad iron, which is soft and wears away relatively fast, as crossbar material. A variety of harder steels have been used for crossbars; the best appears to be a material called Wear-alloy B. This steel wears as well or better than moldboard steel (the other type commonly used to modify chains) and has the great added advantage of being available in long bar lengths of the correct width and thickness. This eliminates much expensive cutting necessary with moldboard and other steel plate.

Ore car rail has sometimes been used for crossbars. This steel is much softer than the other types used. Bars of this kind must be replaced or have their worn ends rebuilt much sooner than bars of harder steels. Ore car rail does not permit as strong a weld as the harder steels; sometimes the bar is broken off completely. The softer steel has a possible advantage mentioned by two project leaders: it is less likely to produce sparks, and therefore decreases the chance for fire starts. No one has observed sparks to be troublesome with anchor chain, but tractor grousers throw sparks that reportedly have set fires.

The most frequently recommended crossbar dimensions are 1 inch thick, 3 to 4 inches wide, and up to 18 inches long, the length depending on the size of the chain. There should be an overlap of approximately 4 to 5 inches on both sides of the links.

To hold crossbars, a small strip of strap iron should be welded to one side of the web of each chain link that takes a crossbar (fig. 7), thus bringing the level up almost to the height of the outside of

F-522973

Figure 6.—Crossbars welded onto every link of a chain increase its effectiveness in crushing brush.

San Diego County Department of Agriculture

Figure 7.—Anchor chain modification usually includes welding a small bar to the link web, as shown here on the bottom link. This provides a flat surface across the entire width of the link. Crossbars are then "tacked" to the link, and a continuous weld is run around the contact between crossbar and chain link.

the link. This allows the bar to be welded the entire width of the link with an arc welder. Otherwise bars may break off.

Contract specifications for the modified chain from the Cleveland National Forest and San Diego County Department of Agriculture are presented in Appendix D.

It is possible that other types of modified chains may be useful. On one project, steel triangles were welded on the sides of the links (fig. 8). This proved to be more effective than the smooth chain but not as effective as the straight crossbars because the triangles slid off the brush more readily.

Lead chain and swivels

From 20 to 25 feet of smooth lead chain and then a swivel should be used between the tractor and the modified chain. The smooth lead chain allows the tractor to back up and turn around without running over the swivel and modified chain. The swivel allows the chain to roll and chop, rather than slide over the brush.

F-522974

Figure 8.—A chain modified with steel triangles welded to each side of links was more effective than smooth chain, but less effective than chain modified with crossbars.

Many large swivels are available commercially. Swivels are sometimes hard to acquire, however, even though many equipment companies handle them. Commercially manufactured swivels sometimes take 2 to 3 weeks to arrive, and their prices vary from $300 to $1,000, depending on the type and capacity. Because of these problems, swivels made from D-9 track rollers and 1 1/2-inch steel plate (fig. 9) appear to be used almost exclusively

F-522975

Figure 9.—An anchor chain swivel can be made from a D-9 track roller and 1 1/2-inch steel plate at a cost of approximately $350.

and serve the purpose well (*2*). The roller can be drilled and tapped to take a Zerk grease fitting protected by a raised welded ring. This allows the swivel to be lubricated, preferably as often as the tractor is lubricated. The cover plates should be left on the rollers to help keep out dust and dirt.

The swivel can be attached to the modified chain with Navy master connector links, with a 2-inch-diameter pin connecting it to the smooth lead chain. For safety, all swivel pins and clevis pins should be threaded and/or fastened in place with a heavy-duty cotter key or heavy bolt and nut with a cotter key. All pins and cotter keys should be checked every morning and evening and at least twice during a day's operation.

To avoid the danger of pins working out, one project manager had the pins tacked in a few places with spot welds in addition to the cotter keys. This appears to be a good safety precaution but frequent daily inspection is still needed.

On one project, a swivel hook was used to connect the chain to the cable. The swivel hook did not have a safety snap to prevent the chain from slipping off the hook if the chain became slack. Although no difficulties were encountered on this project, any open hook should have a safety snap installed as a safety feature.

Modified Chain Between Two Tractors

In general, the chains used between two tractors are modified. They are made from heavy anchor chain (destroyer or cruiser type), ranging from 40 to 90 pounds per linear foot. The length of chains in current use varies from 90 to 270 feet (1 to 3 shots), depending on size of tractor used, terrain, and number of large trees and boulders. The 180-foot chain has been found generally useful in mountainous terrain. The effective swath width averages about half the length of the chain.

The heavier chains, from 60 to 90 pounds per foot, not including the weight of the crossbars, appear to be the most effective; however, smaller chains have been used with generally satisfactory results. Ease in handling is an advantage of the lighter chains; they can be loaded onto a truck by one or two men, and smaller trucks can be used.

When the chain is used with two tractors, a swivel at each end allows the chain to turn and "walk" over rocks, and it effectively crushes and uproots brush. On a few projects, a third swivel was installed in the center of the chain, and this allowed each half to turn independently. This did not increase the effectivenesss appreciably, but did keep the chain from occasionally becoming twisted.

The smooth lead chain may be connected to the tractor at the drawbar on the rear of the tractor, or at the cable winch. The cable winch connection appears to have an advantage. In heavy fuels or in steep terrain where the tractors may bog down, operators found they could winch out 50 to 100 feet, stop the tractor, and winch the chain up to them. Wherever the tractors had difficulty getting traction, this proved very effective. Another advantage of the cable winch connection is greater safety. Sometimes, in extremely high brush or in rough terrain, operators lose sight of each other. If one tractor is hung up, the other operator may not know it and may keep pulling, thus twisting or tipping over the stalled tractor. With the chain hooked to the cable, the operator of the stalled tractor can let out cable until he or the swamper gets the other operator's attention.

Techniques. Since the modified chain is not very maneuverable, it is sometimes hard to pioneer the perimeter of the area to be cleared. With good terrain, flagging the route may be all that is needed, but on several projects, a tractor with brush rake (usually one of the tractors used to pull the chain) pioneered the perimeter for the chain. This appears to be a helpful step, especially in tall brush on difficult terrain. This method is also helpful in defining the buffer strips along stream bottoms.

Most project leaders reporting believe that pulling the chain in a broad "J" configuration, with a swath width equal to about half the length of chain, results in most effective uprooting, brush breakage, and crushing. Numerous pattern variations are used, however, depending on tractor size, terrain, and other conditions. With the "J" configuration, and a swivel near each end of the chain, there was a slow turning of the modified chain that seemed to work bars into the ground and uproot a maximum of brush plants. In San Diego County, an estimated three-fourths of the root burls of mature brush were uprooted from loose sandy soil.

There have been instances in summer, on hard ground, where the bars did not penetrate and did

not uproot brush. A heavy smooth chain might have accomplished as much as the modified chain under these conditions.

Communications techniques. Good communications are essential for most operations where heavy equipment is being used. With one tractor, visible hand signals generally suffice. When two tractors are working as a team with one swamper, however, hand signals are not adequate. Radio communications are strongly recommended for the modified chain, for both the operators and the swamper. It is easy for the tractors to move into areas where they should not be, especially in tall, heavy cover. If the swamper has radio communication, he can oversee and control the operation from vantage points. Radio communications are also essential when an operator gets his tractor in trouble.

On one project, small citizen band radios were used to good advantage. The radios were mounted on the tractors and the operators were provided with headphones. This allowed the swamper and both operators to be in constant contact even though they could not see each other. Occasional difficulties arose; antennas sometimes broke off and some operators refused to wear the headphones. There were also complaints about poor quality and high frequency of repair of citizen band radios. To remedy this, antennas could be made of more flexible material or spring mountings could be used; Forest Service net radios could be substituted for citizen band radios; and perhaps the contract could specify that the operators wear radio headphones. Recent improvements such as the bone-conducting microphone, and small earphones, both of which can be worn under the hard hat, have made this equipment more comfortable to wear.

Another communications technique used on a few projects was attaching dune buggy whips, with high visibility flags, to the top of the tractor canopies. This allowed each operator and the swamper to keep sight of the tractors in higher vegetation and in broken terrain. This inexpensive technique is recommended for all modified chain operations.

Tractor size required

On most projects using the modified chain, tractors in the D8-46A category (270 net hp at flywheel) were employed. A few smaller tractors, in the 200 to 230 category, were tried, but most users recommended the 270 range. For good traction, a minimum grouser height of 2 inches is recommended.

The tractors should be of about equal horsepower so they can switch positions as they make the return swath. They merely turn around in place and the tail tractor becomes lead tractor. On one project, a small tractor was used for the tail of the chain because the tail requires less pull. This arrangement proved awkward and inefficient because both tractors had to reposition themselves on the slope to make the return swath.

Capability

Number of passes. Most project leaders suggest that two passes with the chain, one in either direction, are needed to prepare brush for burning (figs. 10,11). We have seen two incidents, however, that suggest one may be enough. On a prescribed burn on the Palomar District, Cleveland National Forest, in mature chaparral, fire burned to the ridgetop a strip that had been crushed with one pass of the anchor chain. Brush could not be ignited on either side of the treated strip. Again, on the Los Padres National Forest, 16-year-old brush that had been compacted with one pass of a chain near the ridgetop burned, whereas fire could not be induced to run through the untreated brush below.

During chaining operations there is a tendency, particularly during the second pass, for a windrow of brush to build up near the bottom of the loop. The chain eventually rolls over it and starts to accumulate again. These windrows are easily burned, as are also the smaller scattered piles.

Vegetative types. The modified chain is highly effective in all mature chaparral types, except perhaps scrub oak. Young flexible brush may not be uprooted nor compacted.

Large trees, scattered or in groves, create difficulty. If some trees are to be preserved, narrower swaths and extra maneuvering are needed, and rate of production is reduced considerably. Islands for landscaping and wildlife purposes must be allowed for in the same way. Maneuvering for such reasons is easier if the "J" configuration is used rather than a broad "U".

Slope. The modified chain is highly effective in uniform slopes up to 30-35 percent. Where the winch has been used to pull the chain, slopes up to 45 percent have been chained successfully. The more rugged and broken the terrain, the less effective the chain.

Rocks. In most situations, rocks are only a slight hindrance to the modified chain. Smaller rocks are moved easily and the chain tends to walk or roll itself over them. Large boulders with perpendicular sides will catch the chain, requiring that one of the tractors back up and go around. This reduces pro-

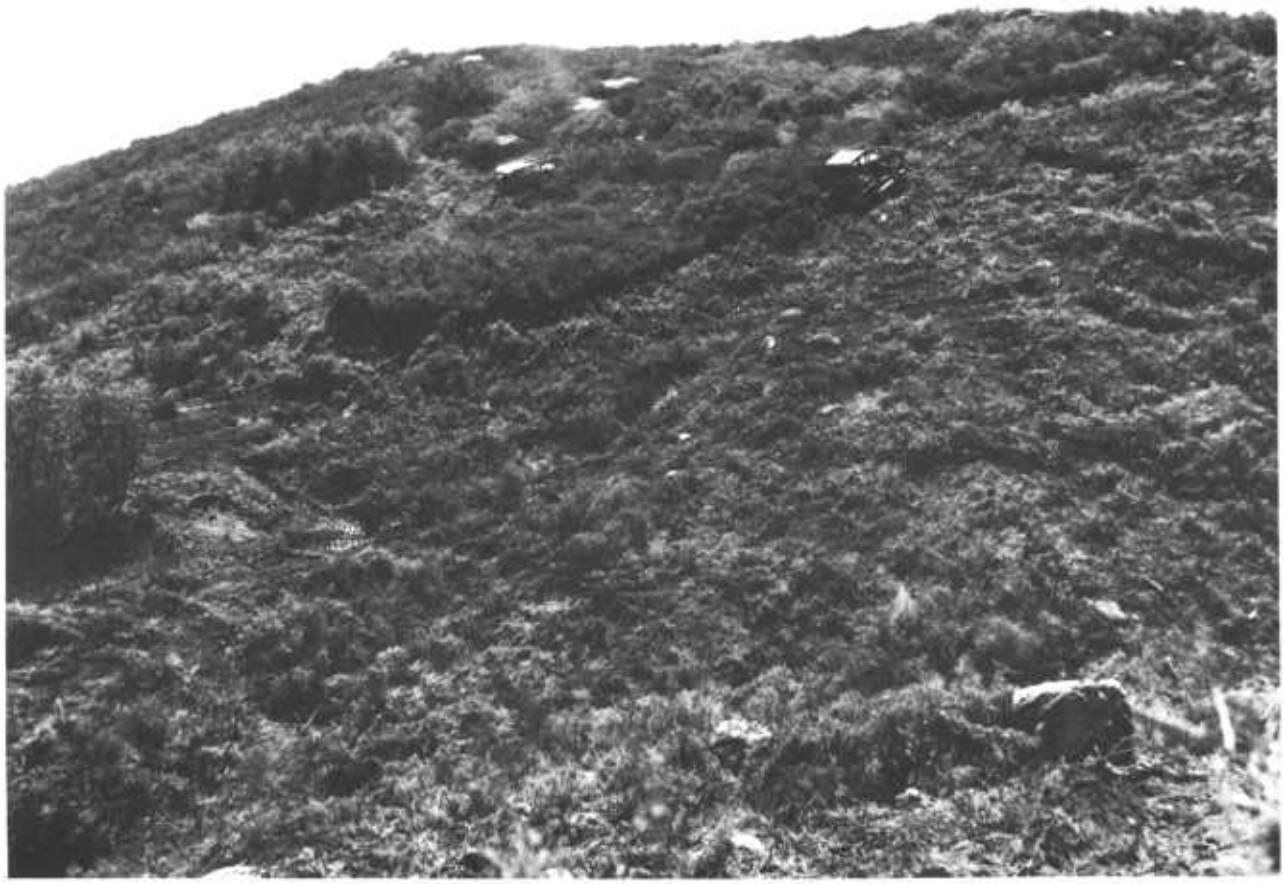

F-522976

Figure 10.—When two tractors pull an anchor chain through heavy chaparral, one such pass will usually compact and desiccate brush enough for later burning.

duction considerably. Most users were impressed, however, with the good performance of the modified chain in rocky country.

Roads. The modified chain can damage road berms, fills, and overside drain structures when roads are crossed by the chain. When roadcuts are not too high, it is possible to work above some roads by walking one tractor (usually the lead tractor) along the road. This technique was used quite successfully on slopes that were otherwise too steep (fig. 12).

Workers in San Diego County described how they crossed highways without dismantling their modified chain hookup. The two tractors approached the road with the modified chain stretched tightly between them in a shallow U-shape, as nearly a straight line as possible. Flagmen were stationed to stop traffic, and automobile tires were laid to keep tractor tracks off the road surface. The tractors were then driven across, keeping tension on the chain. The chain rolled on its swivels, "walking" across with little marking of the macadam. If the chain were allowed to assume a deeper "U" or "J" shape, it would cut up the roadbed. The smooth chain was taken across roads in a similar manner.

Production rates and costs

The rate of production generally varied from 1.5 to 6 acres per hour for two passes, one in each direction, in the lighter fuels, and from 1 to 5 acres

F-522977

Figure 11.—During the second pass of an anchor chain, the loosened brush tends to build up ahead of the chain until it is finally dumped as a rough windrow which can be readily burned.

per hour in the heavier fuels (table 2). In southeastern San Diego County, with gentle terrain, light fuel, and skilled operators, as much as 10 acres were double-chained per hour. A less capable contractor did considerably less. The average for about 2,000 acres was 6.5 acres per hour.

Costs varied from $15 to $50 per acre in the lighter fuels and from $20 to $75 per acre in the heavier fuels for two passes (table 2), except in eastern San Diego County, where direct costs averaged $12.67.

Comments

Safety. On the steeper slopes, the lead tractor should be on the downhill side. This puts him out ahead of rolling rocks knocked loose by the chain and tail tractor.

The swampers should be behind or above the tractors and chain and should not ride the tractors unless a seat is provided.

Use of contractor. Contracts should be written so that both tractors are provided by the same contractor. On one project, two separate contractors were used on the same chain, but this can cause difficulty. One contractor may think the other is not doing his share, and if one breaks down, the other one, of course, still wants to work. If he is unable to work, he may put in a claim against the agency or the other contractor. A clause has been used successfully

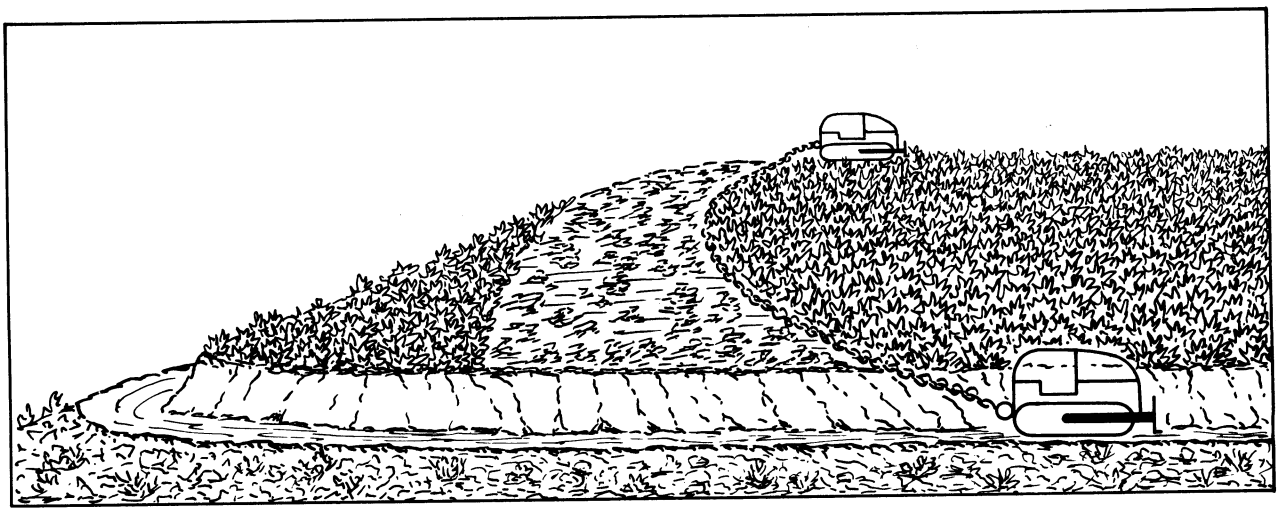

Figure 12.—Some steep slopes between road and ridgetop can be worked with the modified chain. The lower tractor, on the road, should be leading to be clear of rolling material knocked loose by chain.

TABLE 2.—Estimated production rates and on-site costs[1] for crushing brush with two passes of the modified chain between tractors, as used on two National Forests in various fuel types[2]

Project	Tractor and net horse-power at flywheel	Percent slope	Types 7, 8		Types 11, 12		Type 13		Type 14		Type 14 with large oaks	
			Acres per hour	Dollars per acre	Acres per hour	Dollars per acre	Acres per hour	Dollars per acre	Acres per hour	Dollars per acre	Acres per hour	Dollars per acre
Cleveland N.F.												
Descanso R.D.	Two D-8 235 hp	0-25	2.5	30			2.0	38	2.0	38	1.5	50
		25-35	2.0	38			1.5	50	1.5	50	1.0	75
		35+	1.5	50			1.0	75	1.0	75	.5	150
Palomar R.D.	One AC 21-P 268 hp, with one TD 30 285-300 hp	0-25	6.0	15			5.0	20	5.0	20		
		25-35	5.0	20			4.0	25	4.0	25		
		35+	2.0	35			2.0	35	2.0	35		
San Bernardino N.F.												
San Jacinto R.D.	Two Terex 82-30 230 hp	0-25			2.3	24	2.0	28	1.8	30	1.2	44
		25-35			2.0	28	1.8	30	1.5	37	1.0	55
		35+			1.8	30	1.5	37	1.3	42	.8	84
Average		0-25	4.3	23	2.3	24	3.0	29	2.9	29	1.4	47
		25-35	3.5	29	2.0	28	2.4	35	2.3	37	1.0	65
		35+	1.8	43	1.8	30	1.5	49	1.4	51	.7	117

[1]Costs include two large tractors, two operators, and a swamper. Mileage, cost of anchor chain, overhead, planning, etc., are not included; to estimate total project cost, add 40 to 50 percent.

[2]Fuel type designations are from USDA Forest Service, California Region, *Fireline Handbook* (*11*).

in some contracts that allows the agencies to shut down the other tractor until a damaged tractor is repaired.

Advantages and disadvantages

Advantages	Disadvantages
1. Low in cost per acre compared to alternatives.	1. Restricted in maneuverability, hence not very selective.
2. High in production rate, on suitable terrain, compared to alternatives.	2. Limited in application by slope, irregular terrain, and brush age and type.
3. Creates minimum soil disturbance.	3. Requires special communications techniques in heavy fuel and broken terrain.
4. Leaves enough debris on surface to help reduce erosion potential.	4. Removes few roots and shrub crowns, so that sprouting occurs and herbicides are usually needed.
5. Facilitates burning; treated brush burns when surrounding brushfields do not burn readily.	

Ball and Chain

Mechanical brush treatment with anchor chains between two tractors, or with a bulldozer or brush rake, is not usually feasible on steep side slopes. The "ball and chain" technique of crushing brush was developed to fill this gap.

The equipment usually used for a ball-and-chain operation is a light-to-heavy anchor chain and a steel marine net float (buoy), 5 feet in diameter. The buoys, like the chains, are available through Navy surplus outlets. The anchor chains are frequently modified as described earlier. Sometimes, to keep the chain light enough for the ball to pull it downslope adequately, a reduced number of crossbars are used.

The working chain usually forms an arc, caused by the drag of the chain on the ground, brush, and rock. The width of swath then becomes one-third to two-thirds the chain length, depending on such conditions as size of brush, steepness of slope, and weight of chain in relation to weight of ball.

Various lengths of chain have been used, from 50 to 200 feet. The California Division of Forestry suggested 120 to 150 feet as a result of their tests (*1*, *6*), and these lengths are typical of chains used on recent projects reported.

Chains used weigh from approximately 10 to 80 pounds per foot. Weight should be proportional to weight of ball and length of chain. On some projects, the weight of the chain was so great the ball would not drop down the slope far enough to work effectively, particularly on the more gentle slopes. Long chains should therefore be of fairly low weight per foot; short chains may be heavier.

A simple chart may help in determining the size and length of chain to be used with a 5-foot buoy filled with water:

Length of chain, ft	Recommended weight of chain, lb/ft
60- 90	50-60
90-130	35-50
130-180	20-35

Weights do not include the crossbars added to modify chains.

On two projects, a steel cable (7/8 to 1 1/8 inch) was tried instead of an anchor chain to drag the ball. This was not entirely successful; the cable was easily damaged and weakened, and the cable did not crush and uproot brush as well as the modified chain.

Ball. The buoy or ball is constructed of high-tensile-strength 3/16-inch steel plate and is 58 inches in diameter. On several projects the buoys tended to leak water after some use. To prevent leaking, a second buoy was cut up and welded over the first as an armor plating. Even so, at least one armor-plated buoy started leaking after a considerable amount of use. It is essential to check the buoys for leaks before use and before armor plating.

The empty buoys weigh about 600 pounds each. Armor plated and filled with water, they weigh about 5,000 pounds each. When filled with fine gravel, and then with water, they weigh about 6,700 pounds. Some balls have been filled with gravel or sand alone, and a few have been filled with concrete. A buoy filled with gravel, sand, or both, is more difficult to fill and to empty for transporting, but leakage is avoided. When filled with concrete, the buoys weigh approximately 9,000 to 10,000 pounds, depending on the density, but of course

they cannot be emptied for transportation. San Diego County Department of Agriculture plans to fill a buoy with concrete, using a 6-sack, 1-inch-mesh, Class A mix, vibrated into heavy density with a 2-inch vibrator. They expect the ball to weigh approximately 10,000 pounds. This weight will overcome the drag of the heavier chain, but transportation will be difficult.

A water-filled buoy must be *completely* filled to prevent severe denting, which increases the chance of leaks (fig. 13). Because water will not compress, filling the ball to capacity helps prolong its life.

Hitches. A number of hitching techniques for the ball and chain have been reported. Their effectiveness varies, depending on the viewpoint of individual land managers. Some users attach the chain directly to the rear drawbar on the tractor, whereas some prefer to attach it to the cable winch. On one project, a hitch was welded on the ripper bar; on another, hitches were welded on both sides of the tractor.

If the chain is attached to the rear drawbar, the center of gravity is kept low and the operator has good control. When the tractor is working from a road, however, the low chain can do considerable damage to berms, fills, revegetation on fills, and overside drains and aprons. With this hookup, the ball can be moved up and down the slope only by moving the tractor. The tractor can change directions without unhooking, however.

With the side hitches, the center of gravity is also low, and the likelihood of damage to roads is thus present. Again, the tractor must move up and down slope to move the ball. It is also necessary to hook and unhook the chain when changing direction.

F-522978

Figure 13.—Denting of this buoy, or ball, would have been much less severe had it been completely filled with water.

Attaching the chain to the cable winch allows the operator to extend the ball and chain various distances by letting out cable. Once some cable is out, the operator can adjust the ball up or down simply by using the winch. When the tractor is working from a road, the cable and chain are above the berm and also above some of the overside drains. This attachment raises the center of gravity, but most operators who have used the method do not consider this a serious difficulty. Attaching the ball and chain directly to the cable results in considerable wear on the sides of the winch drum case, because the weight of the ball and chain pulls the cable off the drum sideways. A possible remedy is to build a heavy roller guide on the sides of the drum, but again, operators do not consider the wear a serious difficulty. This method allows the tractor to change directions without unhooking, a definite advantage.

When using a hitch welded on the hydraulic ripper crossbar, the operator can raise and lower the center of gravity at will. When working from a road, he can prevent some damage to berms and fills by bringing the ripper bar up. He can also change the tractor direction without unhooking. With the hitch on the ripper bar, however, a winch cannot be used, and most users consider this a serious disadvantage.

Regardless of the method of hookup used, there is a definite need for a cable winch. Users reported that the ball or chain frequently caught on obstacles, and the winch proved helpful in getting it free.

Swivels. A single swivel at the end of the 20 to 25 feet of lead chain appears to be the most effective swivel arrangement. Then as the ball moves across the slope, it turns, and turns the chain also, causing the chain to roll and chop, removing and breaking more brush. When a second swivel was tried at the ball, the ball rolled but the chain slid along with less effectiveness.

Transportation problems. The bulkiness and extreme weight of the ball and chain pose special handling problems. Ideal equipment is a large flatbed truck with a hoist or A-frame. This allows one man to load, drive to the job site, and unload.

Frequently the ball was chained to a tractor blade and then lifted onto the truckbed (fig. 14). Unloading is not usually difficult when a tractor is on the site. The material used to fill the ball significantly affects ease of loading, unloading, and transportation. For short hauls, it is possible to drag the

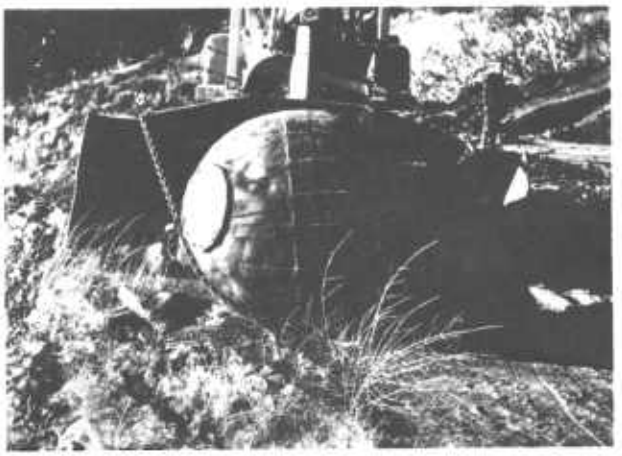

F-522979

Figure 14.—A ball may be chained to a tractor blade for lifting to a truck and transport to the next nearby work location. This ball has been armor plated.

ball and chain behind the tractor or to pick the ball up with the tractor blade and "walk" it along. Dragging usually causes damage to the road or ridgetop, and ball and chain tracks must be repaired to control erosion. On one project, the chain alone was dragged behind a tractor. It sawed 2 to 3 feet into the ground, leaving a straight-walled gully. Cutting each shot of chain into 45-foot sections, as described earlier, was found helpful on some projects.

Tractor size required

A variety of tractors were used for the ball and chain operations; the majority were in the D-8 category (270 net hp at flywheel). On one project, a D7-E (180 net hp) was tried. After some time, the operator and project leader agreed that it was too small, and a D8-46A was substituted. On another project, a D6-C (125 net hp) was used on several ball and chain operations, and its operators judged it to be adequate. They were using approximately 120 feet of chain weighing 20 to 30 pounds per foot. This tractor was the only one of its size we found being used with the ball and chain.

Observations from most field projects using the ball and chain indicate that a tractor in the D7-E category is the minimum size recommended, and one in the D-8 category would be the optimum size. For this use, most people agree that tractor weight is probably more important than horsepower, and that tractor weight must be in proportion to weight of ball and chain.

Capability

Vegetative types. If the chaparral modification objective is uprooting and mulching, the ball and chain is effective only in brush that is light (types 2, 7, and 8) or desiccated. Even in light brush, follow-up burning is usually considered necessary to reduce fuel concentrations to a safe level. In the medium-to-heavy fuels (types 11, 12, 13, and 14), the ball and chain appears highly effective as a crushing technique to prepare brush for burning.

Opinion varied widely as to the necessary number of passes and the desirable amount of flattening and breaking up of the brush. On some projects, six to eight passes were made in light fuels with the aim of eliminating the need for burning, but some users thought that burning the residue was still necessary (fig. 15). Elsewhere, three or four passes were being made and follow-up burning was planned. Where two passes, in opposite directions, were used, the crushing proved adequate for compacting and drying fuels for future burning (fig. 16). Appraisal was not always favorable at the time work was completed, but results appeared better after some weeks had passed.

One pass with a smooth or modified chain, between a tractor and ball or between two tractors, is apparently adequate to prepare mature brush for safe burning. The experience of the Palomar District, Cleveland National Forest and the Los Padres National Forest, described earlier, support this belief. Additional passes increase the costs per acre and do not appear to improve the burning conditions significantly.

The ball and chain appears to be much more effective when the green fuel moisture is lowest (usually summer and fall). The partially dry brush breaks up more readily than when moisture content is high, and treatment results in a higher percentage of dead and dry fuels for burning. Where the brush had been treated with herbicide, and brush was desiccated, the ball and chain did an excellent crushing job.

Although this method appears to be most effective during the summer and fall, it was also found useful when soil moisture was high. On several projects the ball and chain were used during late winter and early spring and appeared at first to have failed completely. The brush appeared to spring back almost unharmed after two or three passes. A few weeks later, it was evident that much of the brush was considerably drier than adjacent untreated brush, and that burning was feasible.

F-522980

Figure 15.—Several passes of the ball and chain may be required to crush brush to the extent shown here. Note the track created by the ball in this sandy granitic soil. Hand work is usually required to repair the surface and prevent erosion.

When soil was moist, but not too wet for efficient tractor operation, many plants were uprooted. Frequently, however, not all roots of a plant were pulled out of the ground or broken off, and such plants lived.

Slope. The optimum topographic condition for a ball and chain operation is a long straight ridge with side slopes greater than 30 percent (fig. 17). Production tends to increase as the side slope gradient increases, because the weight of the ball is then more effective.

Ridges perpendicular to the ridge being worked are undesirable. Frequent finger ridges, rocky points, draws, and small drainages cause the ball to trail up the slope behind the tractor. The chain does not adequately crush brush on the lateral ridge and the operator may have to push the ball back down the slope before he can proceed (fig. 18).

On a few occasions, the ball and chain was used on flat-to-gentle slopes (0-30 percent) as described by Gilbert and Schmidt (*6*). The ball was used as an anchor and the tractor was driven around the ball in a circular fashion. Gilbert and Schmidt (*6*) reported crushing of 8 to 12 acres per hour, but in our study, users reported that results were generally unsatisfactory, and that the disk or modified chain between two tractors should be used on gentle slopes. Best results in these trials were obtained in old, chamise

F-522981

Figure 16.—After the second pass of ball and chain, chamise chaparral may be adequately prepared for burning.

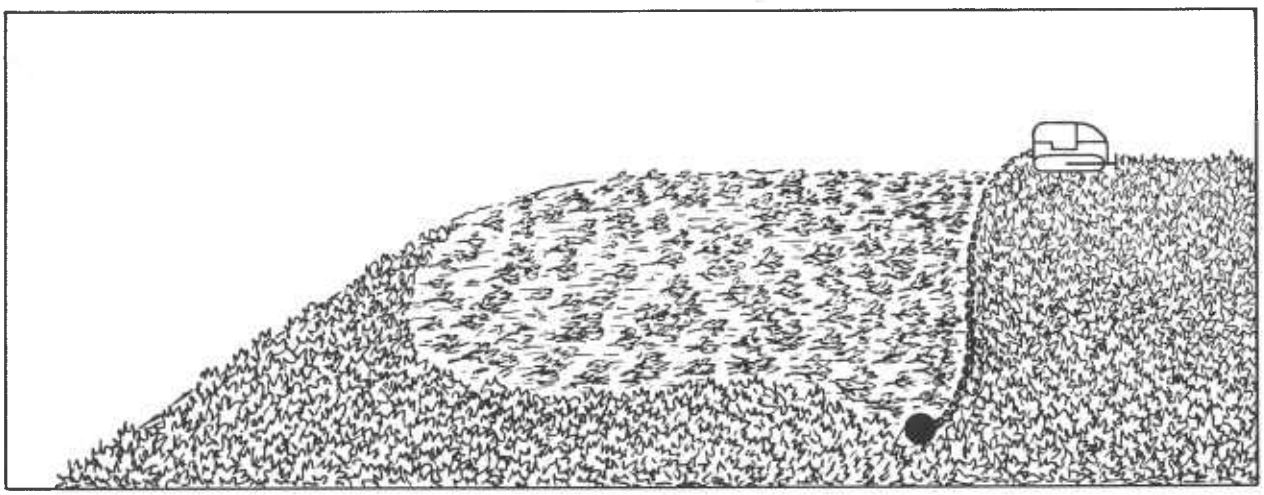

Figure 17.—The optimum terrain for a ball and chain operation is a long, straight ridge with steep uniform side slopes.

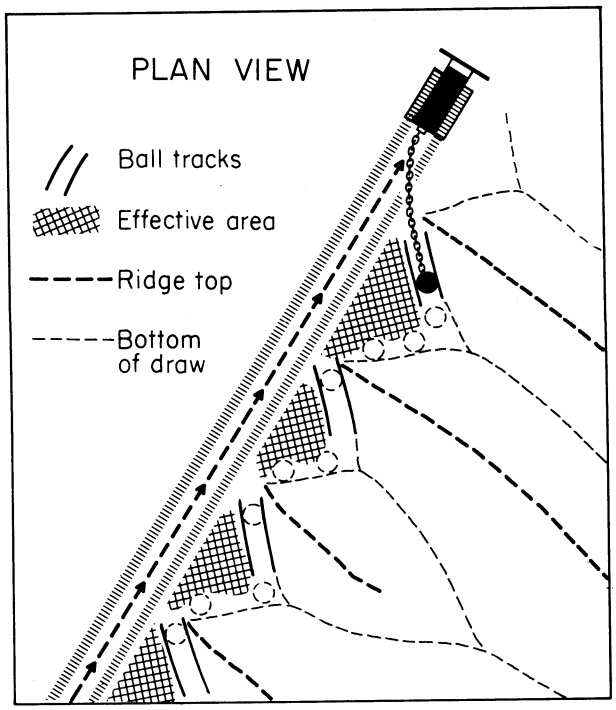

Figure 18.—Terrain with frequent small ridges, draws, etc., is undesirable for ball and chain.

chaparral. Heavy brush with tough species did not crush well.

Edging. The ball and chain in use tends to swing in pendulum fashion, then "snakes" upslope because of brush drag or terrain, and then swings loose again. A desirable irregular or scalloped edge on the crushed strip is thus created.

Rocks and trees. Large boulders and large trees are troublesome. Because the ball hangs up on such obstacles, it must be pulled up the slope until it is clear; then the tractor must move forward and let the ball roll on down the slope again. Where rocks and trees are numerous, a winch is very helpful.

Roads. Care must be taken when working from roads or working across them, and whenever possible, they should be avoided. The chain will damage berms, overside drains, and road fills. On a few projects, fills on which vegetation had become established only after a long period of time were stripped. This made the slopes again vulnerable to erosion, and repeated control work was necessary. When it is necessary to work from a road, it is advisable to remove drainage structures such as overside drains and downspouts. On one project, it was necessary for a small tractor to follow along behind the ball and chain to reconstruct the road and berms, and to restore drainage.

Production rates and costs

The production rates for the ball and chain on fuel-break sites varied from 1 to 2 acres per hour in the lighter fuels, and from 0.5 to 1.5 acres per hour in the heavier fuels. This was for two or more passes (table 3). Production was greatest on slopes averaging 50 percent or more, and least on gently sloping ridges.

The on-the-ground costs of operating the ball and chain varied from $22 per acre for three or four passes under good working conditions to $50 per acre in the lighter fuels, and from $40 to $70 per acre in the heavier fuels (table 3).

Comments

Soil disturbance. In general, the ball and chain cause less disturbance to the soil than other methods. An important exception is disturbance near the tractor where the chain digs relatively deep, especially on road berms, and on other small knobs and outcroppings. Also, ball tracks are created where the ball is pushed over the side and where the ball slides back up the ridge either by intent or accidentally.

This disturbance usually requires erosion control work. To repair the ball tracks, hand crews are usually needed to construct water bars and to plant or seed.

Special hazards. Several balls have been lost (down canyon) over the past few years. The clevis pin worked out or became unscrewed, or the swivel broke, or the clevis spread apart. Breaking of the chain or cable was not reported.

One project supervisor reported heavy wear on the pin to which the swivel was directly hooked. To remedy this, a heat-treated bushing was used around the pin.

Because there is a potential loose ball hazard, ball and chain operations above heavily used roads, trails, campgrounds, and residential areas are not recommended.

There is a hazard to the swamper or observer if he gets below the ball or chain, especially when the ball has become hung up in trees or rocks. It is not unusual for the ball to be pulled free very suddenly under pressure from a winch or other device, dislodging large rocks and trees as it does so.

There may also be a whipping action in a slack chain as the tractor moves forward suddenly (fig. 19). This has resulted in a few "close calls," and those nearly injured report that the chain can move much faster than a man.

TABLE 3.—Estimated production rates and on-site costs[1] of crushing brush with two or more passes[2] of the ball and chain as used on three National Forests in various fuel types[3]

Project	Percent slope	Ball and chain passes	Types 7, 8		Type 12		Type 13		Type 14	
			Acres per hour	Dollars per acre	Acres per hour	Dollars per acre	Acres per hour	Dollars per acre	Acres per hour	Dollars per acre
Angeles N.F.										
Mt. Baldy R.D.	20-30	7-8	1.0	50			0.8	70		
	30-50	7-8	1.3	45			1.0	65		
	50+	7-8	1.5	40			1.3	60		
Saugus R. D.	30-50	4-6	2.0	34						
	50+	4-6	2.0	34						
Cleveland N.F.										
Palomar R.D.	30-50	2					1.5	51		
	50+	2					1.5	51		
Trabuco R.D.	30-50	3-4	1.2	30						
	50+	3-4	1.6	22						
Los Padres N.F.										
Santa Barbara R.D.	30-50	2-4	.8	40	0.6	50	.50	60	0.50	60
	50+	2-4	1.0	30	.8	38	.80	40	.75	40
Average	20-30		1.0	50			.80	70		
	30-50		1.3	37	.6	50	1.0	59	.50	60
	50+		1.5	32	.8	38	1.17	50	.75	40

[1]Costs include tractor, operator, and swamper. For total project costs, including mileage, overhead, planning, etc., add 40 to 50 percent.

[2]Rates and costs cover total number of passes.

[3]Fuel type designations are from USDA Forest Service, California Region, *Fireline Handbook* (*11*).

When the ball and chain are attached to a winch line, the cable sometimes becomes twisted, building up torque in the line, even when there is a swivel. When the tractor moves the chain, sometimes just slightly, the cable suddenly untwists and can injure anyone standing close. This does not happen often, as the swivels usually prevent it.

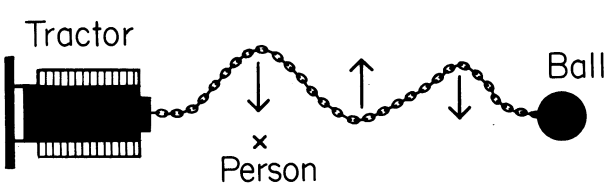

Figure 19.—A potential whiplash situation is diagrammed here. As the tractor moves forward suddenly, it snaps the slack chain in the direction of the arrows—sometimes very sharply.

Advantages and disadvantages.

Advantages

1. Allows work on steeper slopes, eliminating or reducing the need for more expensive hand labor.
2. Effective in creating irregular edge effect—scalloping, etc.
3. Allows varying degrees of cleanup, depending on number of passes.
4. Creates minimum soil disturbance, except near the tractor.
5. Facilitates burning; treated brush burns when surrounding brushfields do not burn readily.

Disadvantages

1. Not very maneuverable, especially among trees and boulders; leaving specimen trees or clumps is not easy.
2. Creates large ball tracks, usually requiring erosion control by hand labor.
3. Removes few roots and root crowns so that sprouting occurs, and herbicides are usually needed.
4. May damage road berms and fills, and small hills and knobs.
5. Difficult to handle in loading and unloading.
6. Liable to lose the ball, which would be hazardous, particularly near residential areas.

Chopping and Shredding Equipment

Where prescribed burning is not planned, equipment is needed to chop or shred the brush, reducing it to a mulch that can be at least partially incorporated into the soil. The brushland disk is widely used; the roller chopper is valuable in gentle terrain, and the Tritter shredder has also been tried. These are discussed below.

Other types of equipment to chop or shred brush have been tested by the Equipment Development Center and by manufacturers in cooperation with agencies in the field. Results have usually not been encouraging in the rough, rocky, often steep terrain where chaparral modification in California is generally attempted. Among the equipment tested is the Tree Eater, which shreds woody material by beating it with flails or hammers mounted on a drum. It was found to be high in initial cost, and maintenance was excessive during tests *(12)*; consequently it has not become part of California chaparral modification. The Trakmac TM-72 is a 4-tracked articulated platform supporting equipment which drives a cutter at the end of a boom. It has been tested by the Forest Service Pacific Northwest Region. Costs were about $45 to cut about 300 stems per acre in a thinning operation, and $70 per acre to thin and treat the thinning slash *(14)*. Large rotary mowers have been tested, but breakage was excessive in heavy chaparral. It appears that for the near future, equipment already in use will do most of the chaparral modification work in California.

Brushland Disks

A large variety of weights and sizes of offset harrows and disk tillers, commonly referred to as brushland disks, are available from manufacturers such as Rome and Towner. The disks most commonly used have two gangs of blades that can be opened to offset each other, thus causing a chopping and cutting action as the disk passes over the brush. This angle of opening can be adjusted by cable, hydraulic, or mechanical control. With the hydraulic and cable controls, the disks can be opened and closed while in operation. To adjust the mechanically operated disks, it is necessary to stop the tractor, remove some bolts, move the tractor forward or backward, and then replace the bolts.

Some disks are available with wheels and rubber tires that can be raised out of the way during operation and then can be dropped (either manually or hydraulically) when the disk is to be towed behind a truck to the next project. (Multiple-ply, puncture-proof tires should be specified if disks with wheels are ordered.)

Almost everyone interviewed was favorably impressed with the overall effectiveness of the large brushland disks in uprooting, cutting up, and mulching brush, even in the heavier fuels. Users were especially pleased by the number of roots and root burls brought to the surface. Nearly all felt this would reduce maintenance costs considerably by reducing the number of sprouts. Additional observation is needed to establish the range of sprout control, but results were particularly good on chamise chaparral.

The disk does not remove the topsoil, but does stir and loosen it to a depth of 8 to 16 inches, depending on the disk weight and the size of blades. This loosening may increase the infiltration and percolation rate of the soil temporarily, but may also leave it vulnerable to rain and runoff during storms of high intensity or long duration. Personnel on several projects maintained that rainfall on freshly disked land resulted in little erosion. Such estimates are relative, however. Possibly, the surface had been hard and crusted, with little vegetative cover, or had been made water repellent by hydrophobic substances from shrubby plants, the effect sometimes being intensified by earlier burns. Disking could improve both conditions.

Disks in use today weigh from 6,000 to 12,000 pounds and may be 8 to 12 feet wide. Blades vary from 28 to 38 inches in diameter. The most commonly used disks at present are the 9-foot 6-inch Towner (Model 801-144) and the 12-foot 2-inch Towner (Model 801-184), both with 36-inch blades (fig. 20).

The California Division of Forestry reported good results in using disks 8 to 9 feet wide and weighing only 5,100 to 5,300 pounds, with 28- to 32-inch blades, near San Luis Obispo, California. One pass of the disk prepared heavy brush for broadcast burning; a second pass produced a

F-522982

Figure 20.—This 9-foot 6-inch Towner disk with 36-inch blades is the most popular size brush disk presently used on southern California wildlands.

seedbed suitable for drilling with the rangeland drill, without burning*(5)*.

On one project, two disks of similar weight were used–one with 36-inch blades and the other 32-inch blades. The project supervisor and the operators could find little difference in the results. These disks were used in both light and heavy fuels. Other users felt the larger blades brought more roots and root burls to the surface, so that there was lower sprouting potential. Some users reporting felt the weight of the disk was more important than the size of the blades in achieving the desired results.

Control mechanisms

The hydraulic control mechanism appears to be much superior to both the cable and mechanical method. Many project supervisors and tractor operators were emphatic on this point. With the hydraulic control, the operator can adjust the cutting angle of the disk (open and close the gangs) while the tractor is working *and* while it is stopped. Many operators found that if the angle of cut was adjusted slightly, the disk would cut better under different conditions of soil and brush species and size. Also, when the tractors became stuck (wedged in or high centered), as they occasionally did, with the hydraulic control the operator could close the disk, and maneuver to free the tractor. With a cable or mechanical control, this would be impossible, as the tractor must be moving forward or backward for the disk to be opened or closed.

Operators also reported that sometimes, especially in heavy fuels, the brush "balled up" under the disk, even lifting it completely off the ground. When the gangs were opened and closed, the disk usually cleared itself and started cutting again.

Tractor size required

Opinion varies on optimum tractor size or horsepower rating for pulling each disk. Most users interviewed believe that for chaparral type conversion, the disk manufacturers' recommended horsepower ratings are low, by perhaps 15 percent.

The following horsepower ratings (fig. 21) were recommended for the various disk sizes:

Weight of disk (lb)	Net horsepower at flywheel
8,000-9,000	125-145
9,000-10,000	150-180
10,000-11,000	185-270

Rough terrain and tough heavy brush require more horsepower than light brush on gentle terrain. Therefore, under such adverse conditions, equipment at the upper horsepower range should be chosen. (For comparative tractor specifications, see Appendix A.)

Capability

The brushland disks have proved effective in all chaparral fuel types. Effectiveness depends on the weight of the disk and the number of passes, as well as on the density and composition of the brush stand.

F-522983

Figure 21.—This 12-foot, 10,500-pound disk requires a tractor of 185 to 270 net flywheel horsepower such as this HD-21. The disk has made two passes.

Brush should be disked on the contour and not parallel with the slope. Parallel disking can result in severe erosion. Efficient contour disking is limited to approximately 30 to 35 percent side slopes, and some environmental analysis statements have limited work to lesser gradients.

A few scattered rocks do not greatly affect the disk operation. Large numbers of scattered rocks will prevent the disk from penetrating and thus decrease the amount of cutting and mixing with the soil.

The disk can be worked around scattered large boulders or trees. In areas where the large boulders and outcroppings of trees are close together, it is impossible, of course, to use the disk. In general, the disk is considered highly selective and maneuverable.

In its open, working position, the disk should only be turned to the left, because of the angle of the gangs when open. If the disk is turned to the right while working, there is increased strain on the tongue and drawbar and other parts. Several drawbars and tongues have been bent and broken as a result of turning in the wrong direction.

The disk can be operated under a variety of soil texture and moisture conditions, as long as the soil is not wet. During wet weather, if the tractor tends to bog down at all, work should be stopped. Some soils become extremely hard when dry and penetration of the disk blades is poor.

When soil is moist, or sandy, the disk blades penetrate readily, uprooting shrub root crowns. Also, the disk incorporates twigs and branches deeply into the soil. Some operators pointed out, however, that under moist soil or sandy conditions not all roots are severed, and such uprooted plants frequently survive. In contrast, if disking is done when soil is nearly dry, plant crowns are apt to be broken loose from all roots, and these shrubs die. Also, moisture content of the brush is lower when soil is dry, and brush is more readily broken and mulched.

It is sometimes convenient to attach a seeder to the disk. Results with various types of seeders are described in a later section.

Production rates and costs

Rates of production varied from 0.5 to 2.0 acres per hour in the lighter fuels and from 0.2 to 0.6 acre per hour in the heavier fuels (table 4). They are representative of the rates for the 9-foot 6-inch Towner disk with 36-inch blades (Model 801-144). For the smaller disks, the rate is slightly lower and for the larger disks, slightly higher. The rates apply for *more than one pass* of the disk in most fuel types; repeated passes are necessary to uproot most brush plants, mulch the small stems into the soil, and reduce fuel continuity for fire control. The site can be seeded with the rangeland drill without additional preparation after such disking.

In fuel type 7 (chamise), one or two passes of the disk incorporated 85 to 95 percent of the brush into the soil (fig. 22). In fuel type 14 (heaviest brush), an average of four passes was required to do an adequate job. The first pass of the disk was generally at the rate of about an acre per hour, which was considerably more time—up to three times as much—as second, third, or fourth passes required. This economy on second to fourth passes sometimes encouraged unnecessary passes of the disk in an effort to leave the disked brushfield "clean."

On-site costs varied from $26 to $70 per acre in the lighter fuels, and from $60 to $175 per acre in the heavier fuels (table 4).

Comments

Mechanical failures. On several projects, the tongues and drawbars on the Towner disks failed; tongues required rewelding, reinforcement, or replacement. The most frequent failures were breaking of the main weld near the back of the tongue, and bending of the tongue or swivel. Some of these failures were probably due to equipment abuse (turning wrong direction under stress, too much horsepower, etc.) but there appears to be a definite weakness in the design of the tongue assembly. Until the manufacturer improves the tongue design, we recommend that these points be watched closely during operation or preferably reinforced before the equipment is taken into the field.

A few instances of failure of the hydraulic ram cylinder on the Towner disk were reported. These were attributed to metal fatigue. Many times, during more than a year of use, the hydraulic ram forcibly struck the end of the cylinder when the gangs were opened or closed suddenly. The cylinder wall eventually cracked, leaking the hydraulic fluid. On some projects, this problem was overcome by attaching a heavy safety chain between the ends of each gang. The chain was adjusted so that when the disk snapped open, the strain was on the chain and not on the hydraulic ram. When the gangs were closed, the swamper had to drape the slack chain over the frame to prevent it from getting tangled in the blades. The Saugus Ranger District solved this by adding an upright bracket and garage door spring to keep the chain slack out of the disk.

TABLE 4.—Estimated production rates and on-site costs for one or more passes[1] of the brushland disk, as used on four National Forests in various fuel types[2]

Project	Percent slope	Types 7, 8 (1 pass)		Types 11, 12 (1-3 passes)		Type 13 (2-4 passes)		Type 14 (3-5 passes)	
		Acres per hour	Dollars per acre	Acres per hour	Dollars per acre	Acres per hour	Dollars per acre	Acres per hour	Dollars per acre
Angeles N.F.									
Tujunga R.D.	0-25	2.0	50						
Saugus R.D.	0-25	1.0	30						
	25-35	.8	45						
	35+	.5	60						
Cleveland N.F.									
Descanso R.D.	25-35	1.0	40			0.5	70		
Palomar R.D.	0-25	1.0	26			.5	52	0.3	78
	25-35	.5	52			.2	156	.2	156
Trabuco R.D.	0-25			0.7	53				
Los Padres N.F.									
Ojai R.D.	0-25	1.0	35			.7	50	.6	60
	25-35	.8	45			.6	60	.3	117
	35+	.5	70			.3	117	.2	175
Santa Lucia R.D.	0-25					1.5	40		
	25-35					1.0	45		
	35+					.5	50		
Santa Barbara R.D.	0-25			.8	43	.7	50	.5	68
	25-35			.7	50	.5	68	.3	113
	35+			.5	68	.3	113	.2	170
San Bernardino N.F.									
San Gorgonio R.D.	0-25					1.0	35		
	25-35					.8	45		
Average	0-25	1.3	35	.8	48	.9	45	.5	69
	25-35	.8	46	.7	50	.6	74	.3	129
	35+	.5	65	.5	68	.4	93	.2	173

[1]The rate for the first pass was generally about 1 acre/hr. Rate of subsequent passes was 2 or 3 acres/hr. Rate and cost data cited were for the total number of passes made, and are direct costs of tractor, operator, and swamper. Total costs were about 40 to 50 percent more than on-site costs.

[2]Fuel type designations are from USDA Forest Service, California Region, *Fireline Handbook* (*11*).

Occasionally the hydraulic hose caught in brush or trees and broke. This difficulty was overcome for the most part by running the hydraulic lines through old cotton-jacket firehose and threading it through the eye of a 3- to 4-foot-long rod welded vertically from the disk tongue. This kept the hose up out of the way and still provided enough slack in the hose.

There was only one report of a disk blade breaking. A large section of a blade broke out after hitting a large rock at considerable speed. Breaking of blades does not appear to be a difficulty, even in rocky country, if reasonable care is taken by the operator.

Safety precautions.—A canopy over and around the operator is essential for all tractor work in irregular mountainous terrain, and it is especially needed with the brushland disk. Because the disk has a double-action swivel hitch, it can tip over forward as well as sideways. On one project, a 10,000-pound disk rode up onto "balled" brush, and tipped over,

F-522984, 522985, 522986

Figure 22.—In light chamise chaparral, one pass of the disk incorporated most brush into the soil (top). In moderately heavy *Ceanothus* with scattered manzanita, two passes left more fuel on the ground than desirable for fire control (left). Three passes (right) in similar brush incorporated most of the brush into the soil.

forward. It put a large dent in the canopy about the level of the operator's head. Obviously this operator strongly recommends the use of canopies in towing brushland disks (fig. 23).

F-522987

Figure 23.—During chaparral modification, the tractor operator needs to be protected from whipping branches, and from the disk itself. It rode up over a brush pile, then tipped forward, leaving the dent on the canopy post.

On several occasions disks tipped over sideways. Nearly always this was after the disk rode up off the ground on the balled brush. The narrower 8-foot 2-inch disk appeared to be quite topheavy compared to the wider 10- and 12-foot models and was more prone to tip. Swampers should be conscious of the danger that the disks may suddenly roll over sideways, and should stay clear, especially of the downhill side.

Care should also be taken when repairs are made on these large pieces of equipment. The disk should always be on as nearly level ground as possible, and should be securely chocked in place while repairs are made.

Advantages and disadvantages

Advantages

1. Maneuverable around trees and boulders, in drainages, etc.
2. Effective for creating irregular edge effect—scalloping, feathering, etc.
3. Allows varying degrees of cleanup according to desired esthetic effects.
4. Incorporates debris into the soil, allowing nutrient recycling.
5. Digs out many roots and root crowns, reducing or eliminating need for herbicides.
6. May increase percolation and reduce runoff.

Disadvantages

1. Limited in use by slopes, soil, and rock conditions.
2. Disturbs and loosens soil, making it more vulnerable to detachment and transport by high-intensity or long-duration rainfall and running water.

Roller Chopper

The roller chopper is basically a large drum, lying on its side, around which a dozen or more steel blades have been bolted or welded parallel to the long axis. It is similar to the large sheepsfoot rollers used to compact road fills, but has blades rather than "feet." An axle through the drum, and a drawbar attachment, enable it to be towed, either singly or double in tandem (fig. 24). Several models are available from manufacturers such as Fleco, Marden, and Rockland.

Widths range from 4 to 16 feet, and weight, when roller is filled with water, ranges from 1,350 to 50,000 pounds. Most practical for our work and conditions are 8- to 10-foot-wide models. The single-drum models weigh 18,000 to 28,000 pounds when filled with water, and the tandem (double-drum) models weigh 37,000 pounds or more.

In use, the roller tends to lift itself up onto a blade, then fall forward onto the next blade. This lifting and falling is responsible for part of the cutting action, and efficiency increases as the speed increases. The drums are aligned so that each drum cuts or shears the brush from a slightly different angle.

Models with replaceable and reversible blades appear to be most desirable. With permanent blades, it is necessary to build up the edge by welding, or to cut off the blades with a torch and weld new ones on. Replaceable blades can be changed in 3 to 4 hours.

Like the offset brushland disk, the double-drum offset roller chopper must be turned to the left only. Its design makes turning to the right difficult and subjects the equipment to structural strain and pos-

San Diego County Department of Agriculture

Figure 24.—The offset tandem roller chopper appears to be useful in most vegetation types provided slopes are gentle and the chopper is pulled as rapidly as conditions allow. In medium-to-heavy brush, follow-up burning is usually considered necessary.

sible damage. The single-drum roller choppers can be turned in either direction.

Tractor size required

Generally, a tractor in the D-8 range is recommended, but a small roller chopper or favorable terrain may allow use of a smaller tractor. For roller choppers 10 feet wide, weighing 27,000 pounds empty, and 48,500 pounds filled with water, a tractor of at least 270 hp (net at flywheel) is needed. Manufacturers' recommended horsepower ratings appeared to be low for most mountainous terrain.

Capability

The only recent brushland experience with the roller choppers was reported by the San Diego County Department of Agriculture. A Marden Duplex brush cutter 8 was used in light-to-medium brush with stems up to 2 inches in diameter. The roller chopper made one pass over the chamise-coastal sage brush, and burning was not considered necessary. Observers felt the roller chopper could handle denser brush, provided stem size did not increase much, or could handle larger stems provided the stand was sparse. In denser brush, burning would probably be necessary as a follow-up treatment to reduce fuel volume. Also, in the dense fuels with larger stems, two passes might be necessary.

California Division of Forestry tests reported by Ritchie and Dodge *(10)* indicated that a Marden Duplex brush cutter chopped about 70 percent of medium-density chamise chaparral, 4 to 8 feet tall, into the ground in one pass. In dense, heavy *Ceanothus*, two passes chopped about 80 percent into the soil. In manzanita-chinkapin-snowbrush, the Marden readily crushed the brush satisfactorily for prescribed burning, but not for drill seeding without burning. In San Diego County, the roller chopper effectively cut and broke up willows up to 5 inches in diameter around a large reservoir.

Because the roller chopper tends to slide sideways in a skiing fashion, the maximum side slope appears to be approximately 20 percent. It is possible, however, to work it up and down slopes estimated up to 35-40 percent. A single drum can be lowered and raised, in yo-yo fashion, on much steeper slopes, where large rocks or trees are not a hindrance. This technique would be similar to using a sheepsfoot roller for compacting long fill slopes.

The roller chopper makes depressions the length of the blades. Therefore working it up and down slope instead of on the contour, when slope exceeds 10 or 15 percent, may be desirable. On the contour, the blades leave depressions up and down slope and encourage rivulets and gullies. If the tractor works up and down, the trenches on the contour act as water bars and small check dams.

A few rocks are easily avoided, as reported by San Diego County personnel, but this leaves uncut brush. Large numbers of rocks also result in uncut brush because they hold the blades above the brush. The roller chopper is considered maneuverable and selective, the single drum more so than the double-drum models.

Production rates and costs

Little information is available on the production rates of the different-size roller choppers. We estimate, however, that an 8-foot roller chopper, working under average conditions in medium brush, could make two passes over 1.25 to 1.75 acres in an hour.

Assuming a tractor with swamper rental rate of $40 per hour, on-site costs in medium fuels would be approximately $23 to $32 per acre for the two passes. Some workers suggested the swamper is unnecessary in light brush or on good terrain.

Comments

The advantages and disadvantages of the roller chopper are as follows:

Advantages	Disadvantages
1. Maneuverable around trees and rocks, in drainages, etc.	1. Limited in use by slope gradient, and by excessive rockiness.

Advantages	Disadvantages	Advantages	Disadvantages
2. Effective for creating irregular edge effect (scalloping, etc.).	2. When worked on contour, creates small trenches up and down slope, increasing erosion potential.	sion potential and allowing nutrient recycling.	3. Removes few roots and shrub crowns, so that sprouting occurs.
3. Leaves debris on or near the surface, reducing erosion potential and allowing nutrient recycling.		4. Creates water bars across slope when worked up and down slope, reducing erosion potential.	

Tritter Brush Shredder

Several types of brush shredder have been used in the past, but these generally have not proved practical for California conditions, primarily because they were not sturdy enough. The Yeomans Tritter land conditioner, manufactured and used in Australia for many years for range type conversion, has recently been introduced to our West Coast. It appears to have some application in chaparral conversion.

The Tritter Model 260 weighs approximately 3,300 pounds. It uses 28 hammers or flails, each weighing 6 pounds. rotating at 1500 r/min on a heavy-duty shaft in the direction of travel to clear a swath 5 feet wide (fig. 25). The hammers can be adjusted to cut from 1/2 inch to 8 inches above the ground.

The machine is available with a power-takeoff drive shaft, or an independently mounted diesel engine to drive the hammers may be purchased. The power-takeoff unit does not appear satisfactory in chaparral. On the Saugus Ranger District, Angeles National Forest, there were four universal joint failures during shredding of half an acre of chamise of relatively flat, uniform slope. A power-takeoff unit was used behind a rubber-tired tractor on the Groveland Ranger District, Stanislaus National Forest, to clear manzanita from pine plantations. The old and new growth 2 feet to 4 feet high was shredded in one pass. Larger manzanita required two passes; however, the rubber-tired tractor bogged down in the larger fuels. The operator felt a crawler tractor would have had no problems pulling it through the heavier brush, but there are very few, if any, crawler tractors available with a live power takeoff that is independent of the tractor drive. The Tritter is designed to run at a constant speed, feasible only with an independent drive system.

The optional independently mounted diesel power source is expensive and adds considerable weight to the Tritter. Rear visibility is impaired, making backing difficult. The most practical power source appears to be a hydraulic motor, 60 hp at 2500 r/min, mounted on the Tritter. The Groveland Ranger District, with the help of the San Dimas Equipment Development Center, has converted a Tritter with such a hydraulic motor. The land-clearing contractor was required to provide and mount on his tractor the pump, heat exchanger, filter, control valve and hydraulic fluid storage which met the specifications to drive the motor. When interviewed, Groveland District people were still making minor changes and adjustments, but were sure that the right combination of pumps,motors, and pressures will make the Tritter fully effective for their needs. Costs of the Groveland conversion were approximately $1,500 to purchase and install the hydraulic motor on the Tritter, and from $1,500 to $2,000 to set up the pumping system on the tractor.

The Tritter leaves an evenly distributed cover of finely shredded material over the soil, thus providing soil protection and nutrient recycling. Brush

F-522988

Figure 25.—One pass of the Yeomans Tritter land conditioner reduced medium manzanita brush to shreds on the Stanislaus National Forest. Heavy chaparral required two passes.

species that sprout will do so vigorously following use of the Tritter shredder, because the crowns and sometimes the lower stems of the plants are not damaged. Nonsprouting brush must be shredded below the lowest green branches, or growth will continue.

Tractor size required

Because of the light equipment weight and narrow swath, tractors delivering from 90 to 125 net engine horsepower should be adequate.

Capability

The Tritter appears to perform well in all fuel types, but the rate of production is considerably lower in the heavier fuels.

Small rocks do not appear to interfere with performance; they are pulverized by the hammers. In larger numbers, however, rocks, particularly igneous rocks, shorten the life of the hammers by excessive wear. Large rocks and boulders must be avoided. Because it makes a narrow swath, the Tritter is considered maneuverable and very selective. It will perform on side slopes of up to 30-35 percent.

The Tritter comes equipped with rubber tires which are liable to puncture, and steel wheels or multiple-ply puncture-proof tires should be substituted. A foam is available from some rubber manufacturers for use in conventional tires. Inside the tire, the foam sets up into a solid that will not leak when the tire is punctured. If much highway travel is required, the steel wheels are not practical.

Production rates and costs

An estimate, based on limited use from the Groveland District, is 0.5 to 0.75 acre per hour in medium manzanita on slopes up to 30 percent gradient. The drier and more brittle the vegetation, the more efficient the Tritter appears to be.

The Groveland District estimates, again on limited information, the direct, on-site costs to be approximately $35 to $40 per acre in medium manzanita on slopes where the tractor can operate efficiently.

Comments

The advantages and disadvantages of the Tritter are as follows:

Advantages	Disadvantages
1. Selective and maneuverable.	1. Limited in application by slope, soil, and rocky conditions.
2. Provides a uniform protective cover over the soil, reducing erosion and providing for adequate nutrient recycling.	2. Incorporates little debris into soil.
	3. Does not remove any roots or shrub crowns, so that sprouting occurs.
	4. Low in production rate compared to other alternatives.

Hand Tools For Brush Clearing and Stump Sprout Control

Hand labor is the most costly method of clearing brush, but it may be the only way under some conditions. When steep slopes, loose soil, or rock outcrops make clearing by mechanical methods impractical, and when prescribed burning is not suitable, hand clearing is the only alternative. Hand labor is also desirable for clearing around or through special interest areas such as archeological or historical sites, areas containing distinctive plants, or areas where visual effect is of critical importance.

Size of hand crews varies from a few men to 20 to 25. The crew most commonly used, and apparently most practical, consists of 15 to 20 men. Such a crew is productive and easily transported, and a good foreman can provide the necessary supervision for efficiency and safety.

Cutting and Piling

The tools most commonly used are the chain saw, brush hook, and Pulaski, and sometimes the double-bit axe. On occasion, long- and short-handled pruning saws and pruning shears are used. These pruning tools have been very useful on shaded fuelbreaks for removing the lower twigs and branches from trees.

The Homelite brush cutter was used in place of or in conjunction with chain saws on several projects. A motor carried on the operator's back drives a flexible drive shaft that runs through a 3 1/2 to 4-foot-long metal tube and turns a circular saw. The operator controls the saw on the end of the tube with handlebars. Some users felt this saw in-

creased their production rate several times over the chain saw.

In hand clearing, the brush is placed in piles or windrows for later burning. The piles should not be placed too close to vegetation that is not to be removed, to avoid scorching when piles are burned. If the piles are covered with heavy construction paper, it is possible to burn them under very wet conditions.

While working extremely steep slopes, the crews of one project found that as they worked up the slope they could allow the brush to roll downhill, where it formed a windrow against uncut brush. This technique eliminated some of the strenuous effort required to drag the brush to a pile or windrow.

Stump Treatment

On many projects, the freshly cut brush stumps were treated with herbicide to prevent future sprouting. Generally, undiluted 2,4-D amine (4 pounds per gallon, acid equivalent) was applied to the fresh cuts. Occasionally 2,4-D ester at the same concentration was used.

Among the tools used to apply herbicides to the cut brush stumps are paint brushes, plastic spray bottles, large (1- to 2- quart) oil squirt cans, Hudson sprayers, and drip torches (the type used to burn out and backfire). All these have been used effectively, but the Hudson sprayer appears to be the least desirable method because it encourages application of more herbicide than necessary.

Perhaps the safest and most efficient method of applying herbicides to the stumps is the drip torch technique developed on the Cajon District, San Bernardino National Forest (fig. 26). A floor flange of a thread size matching that on the end of the drip torch (usually 3/8-inch iron pipe), was attached to the end of the looped tube. Next, one half of a coarse-textured sponge (GSA No. 7920-884-1115), approximately 3 by 4 by 2 inches, was attached to the flange with from two to four 3-inch bolts with wing nuts. The sponge absorbed the herbicide, and when it was pressed against the surface of the stump, the herbicide was squeezed out, covering the surface very well. The flow to the sponge can be regulated with the air adjustment on the tank of the drip torch, and dripping prevented. There is little waste and no chance of drift. If the torch is dropped, it will not spill. Where large stumps were treated, the uncut sponge (6 1/4 by 4 1/4 by 2 1/2 inches) was used to advantage. Personnel of the Cajon District estimate they can cover an acre with approximately 1 to 1 1/2 gallons of herbicide, depending on the number of stems per acre.

F-522989

Figure 26.—The best tool for applying herbicides to freshly cut chaparral stumps was a drip torch with a heavy sponge attached.

A coloring agent in the herbicide temporarily dyes the stumps and helps keep track of those that have been sprayed. Tujunga District personnel found 1/2 to 1 teaspoon of Rhodamine B liquid dye sufficient for 5 gallons of amine solution. The liquid dye in plastic squeeze bottles is much cleaner and easier to use than the powder form. Eight ounces of Rhodamine B dye for 250 gallons of foliage spray solution has proved effective. Food coloring at a rate of 1 to 2 ounces per 5 gallons of amine solution was used to good advantage on the Ojai District. Green was considered more visible than red. Either dye will last for a few days or more depending on the weather conditions.

Although good sprout control has been achieved with both amine and ester solutions, the water soluble amine solution has given the most consistent stump kill. In virtually all instances, the effectiveness of the herbicide increased as the time lag between cutting and treating decreased. All stumps should be treated as soon after cutting as possible, and always the same day they are cut.

On some projects, the stump treatment method was not used, but new sprouts were later sprayed

with a solution of 2,4-D ester (4 pounds per gallon, acid equivalent), 1 gallon of diesel oil, and about 100 gallons of water. The cut stump method appeared to be superior to the foliage spray treatment. Foliage spraying becomes necessary if the stump treatment is not successful. If properly and promptly applied, the 2,4-D amine stump treatment frequently resulted in more than 90 percent kill. This was true even of scrub oak on Los Padres National Forest test plots. The stump treatment method also eliminated the need to drag awkward hoses or make frequent trips with portable sprayers, as required for the foliage spray method. To eliminate the few sprouts that resulted from successful stump treatment, one man can cover several acres a day using a Hudson or similar-type sprayer.

It is reportedly common for stumps to sprout shortly after treatment. The sprouts sometimes reach a height of 1 to 2 feet before the plant dies. On some Los Padres test plots, in scrub oak treated with 2,4-D amine, sprouting continued for 2 years before plants died.

Production rates and costs

The rate of production for hand cutting, piling, and stump treatment varied from 70 to 178 man-hours per acre in the lighter fuels (5 to 15 tons per acre), and from 215 to 370 man-hours per acre in the heavier fuels (20 to 40 tons per acre) (table 5).

TABLE 5.—Estimated production rates and on-site costs[1] of hand cutting and piling brush for burning, and treating cut stumps with herbicide, on four National Forests, in various fuel types[2]

Project	Percent slope	Types 7, 8		Types 11, 12		Type 13		Type 14	
		Man-hours per acre	Dollars per acre	Man-hours per acre	Dollars per acre	Man-hours per acre	Dollars per acre	Man-hours per acre	Dollars per acre
Angeles N.F.									
Arroyo Seco R.D.	0-50	150	[3]550			205	[3]750	220	[3]800
	50+	178	[3]650			240	[3]875	275	[3]1,000
Mt. Baldy R.D.	0-50	88	350			250	1,000	275	1,100
	50+	100	400			275	1,100	300	1,200
Tujunga R. D.	0-50					150	600		
	50+					175	700		
Cleveland N.F.[4]									
Descanso R.D.	0-50			201	775	227	875	234	900
	50+			215	825	234	900	252	970
Palomar R.D.	0-50	70	280			200	800	225	900
	50+	80	320			225	900	250	1,000
Trabuco R.D.	50+	70	280						
Los Padres N.F.									
Ojai R.D.	0-50	85	350			250	1,000	275	1,100
	50+	95	390			275	1,100	300	1,200
San Bernardino N.F.									
San Jacinto R.D.	0-50	160	632	200	800	240	960	300	1,200
	50+	175	700	220	880	290	1,160	370	1,480
Cajon R.D.	50+					180	720		
San Gorgonio R.D.	0-50	70	280			180	720	215	860
	50+	80	320			190	760	225	900
Average	0-50	104	407	200	788	213	838	249	980
	50+	111	437	218	853	232	913	282	1,107

[1]For total project costs, add 40 to 50 percent to cover mileage, small equipment, planning, and overhead.
[2]Fuel type designations are from USDA Forest Service, California Region, *Fireline Handbook* (*11*).
[3]Includes an estimated $20 per acre cost of burning piled brush.
[4]No herbicide treatment costs are included for projects on this forest.

On-site costs varied from $280 to $700 per acre in the lighter fuels and from $800 to $1,480 per acre in the heavier fuels. The overall average crewman salary is estimated at approximately $3.85 per hour, and ranged from $3.45 to $4.00 per hour.

Comments

Advantages and disadvantages of hand clearing are as follows:

Advantages	Disadvantages
1. Usually not limited by slope.	1. Very costly.
2. Highly selective.	2. Removes no roots or shrub crowns, so that sprouting occurs.
3. Effective for creating irregular edge effect—scalloping,feathering, etc.	3. Little or no debris is incorporated into the soil.
4. Allows varying degrees of cleanup according to desired esthetic effects.	
5. Does not disturb topsoil.	
6. Effective in very rocky areas.	
7. Does not leave soil in burn piles and windrows.	
8. Produces piles or windrows for burning.	
9. Leaves roots in ground where needed to help hold soil in place while new cover is established.	

Grass Seeding Equipment

Chaparral modification may or may not include seeding of desirable grasses, once the brush has been cleared. The equipment most commonly used for seeding is the rangeland drill. Hand methods are frequently practical, and aerial seeding is sometimes economical for large areas.

Seeding attachments have occasionally been tried. Use of an attachment called the Holt Seeder, installed on the back of the brushland disk, was reported, but it was not considered satisfactory in any trial. The squirrel-cage-type blower did not supply sufficient air velocity to disperse the seed. Attempts made to modify the equipment for better seeding were not successful, and unmodified seeders were being returned to the manufacturer for refund.

The Cyclone Company makes several types of electric seeders that can be attached at the front or rear of a vehicle. The San Diego County Department of Agriculture has used an electric Cyclone seeder on an all-terrain vehicle and has been well satisfied with the results (fig. 27). On one Forest Service project, a battery-powered Cyclone seeder was mounted on the frame behind the disk. Seed was broadcast, and covered by dragging a smooth light anchor chain. With the seeder mounted about 3 feet above the ground, wind was not a serious problem; at greater elevations it was. Distribution was not satisfactory if the seed was broadcast from less than 3 feet.

San Diego County Department of Agriculture

Figure 27.—The San Diego County Department of Agriculture has used to good advantage an electric Cyclone seeder on an all-terrain vehicle. Chaining preceded the seeding. Goggles are essential equipment for the operator.

Rangeland Drill

Over the years, a drill has consistently been the best method of getting seed established. Several types of seed drills are available, but the one most commonly used, and found most rugged and dependable, is the rangeland drill designed for the Rangleland Seeding Committee (*9*) by the Forest Service Equipment Development Center at San Dimas, California. This drill is available in full and half sizes. The full-size drill has a 10-foot planting swath.

The rangeland drill can be adjusted to apply a variety of seed mixtures at desired rates per acre, or can be modified with a small-seed attachment. It can also be equipped to apply commercial fertilizer.

The drill is effective on slopes from 0 to 30 percent and should only be used on the contour. The drill rows then act as small water bars and check dams, slowing down the flow of surface water. The drill is capable of being used effectively on ground strewn with considerable debris and rocks. Because the disk arms are independently suspended, they are free to ride separately over rocks and debris. The drill can be transported from one area to another by suspending it in the rangeland drill carrier designed for it, and towing with a 3/4- to 1-ton truck. Travel routes should be scouted because the carrier width is greater than some truck trails and gates.

Tractor size required

Tractors with 60 to 90 net flywheel horsepower are adequate to pull the rangeland drill, and larger tractors should not be used except to carry a wide bulldozer blade if clearing ahead of the drill is needed. Probably more damage to the rangeland drill results from the use of excessive horsepower than from any other cause (fig. 28).

F-522990

Figure 28.—A 10-foot rangeland drill is towed here by a tractor with a horsepower rating of only 42 (net flywheel). Large tractors are not necessary nor recommended for pulling the drill.

Production Rates and Costs

The rate of production of the rangeland drill varies from 1 to 3 acres per hour depending on gradient, irregularity of terrain, rockiness, and brushiness. If drilling is done after wildfire, clearing of stiff unburned brush stems with a dozer blade ahead of the drill results in only 50 to 60 percent of production on previously cleared, gentle terrain. The Mendocino National Forest averaged 20 acres per day on good terrain, including down time.

Assuming a cost per hour for tractor and swamper of $25, the direct drilling costs range from as low as $8 to $10 per acre, not including seed, to as much as $25 per acre under adverse conditions.

Hand Seeding

When steep terrain, small areas, or other conditions prevent the use of the rangeland drill, seeding by hand is a commonly used practical alternative. Several hand seeders are available, but the Cyclone seeder is used most frequently. These seeders can be calibrated to broadcast seed at approximately the prescribed rate. Fertilizer can also be applied. The Cyclone seeder is available with either a metal or a cloth hopper to hold the seed. The metal hopper appears to be superior and is preferred by most workers. One man can seed from 1 to 2 acres per hour with a hand seeder, depending on the terrain.

Aerial Seeding

Seeding is done by both rotary-wing (helicopter) and fixed-wing aircraft. For large areas close to airports, or areas of uniform terrain, seeding with fixed-wing aircraft is usually cheaper. Helicopters are usually better for seeding small or remote or irregularly shaped areas, such as some fuel breaks, especially if terrain is rough and irregular.

For conditions common to most fuel breaks, the estimated cost range for seeding with rotary-wing aircraft is from $2 to $2.50 per acre. The cost range for fixed-wing is estimated at $1 to $2.50 per acre. The size of the project strongly affects the cost.

Contract Recommendations

A high percentage of fuel break construction and other chaparral modification work is done by contract, and most project leaders feel that contracts could be made more effective. The following recommendations are based on suggestions received.

1. Include a clause to limit the amount of down time without penalty for contract equipment. Excessive down time was detrimental to the accomplishment of several projects because in working under strict seasonal, fiscal year, or other time restrictions, only a short period was available for work. A limitation of 10 to 15 percent down time was suggested, with down time in excess of this resulting in a penalty assessment on the contractor. This would encourage speedy repair, and would discourage contractors from bidding on jobs with rundown or wornout equipment.

The clause allowing the contractor 48 hours to either repair or replace the equipment was generally considered too generous, as a breakdown might recur a day or two later and the contractor would again be covered for 48 hours.

2. Require a minimum of 2 inches grouser height on tractors. Traction is important with all the types of equipment and techniques described in this handbook. Most contracts now used specify horsepower, but even if a tractor has adequate horsepower, wornout grousers will result in poor performance.

3. Specify maximum horsepower requirements. Most contracts specify horsepower minimums, but not maximum horsepower requirements. Sometimes equipment such as the disk and rangeland drill has been damaged because the tractor used was too powerful. It is not uncommon for a contractor to be

the low bidder with a piece of equipment that greatly exceeds the minimum.

4. Write into the contract sufficient flexibility to allow a tractor, and other equipment as far as possible, to be kept busy even if plans change somewhat because of breakdown, weather, or managerial decision. For example, if a tractor is hired to pull a brushland disk, and the disk breaks down, the contractor might be required to switch the tractor to the ball and chain or to a brush rake clearing and piling job. Anticipating such a situation might require the contractor to have the brush rake available. This kind of planning helped several projects.

5. Specify that tractors which must work as a team, as in chaining, should be of approximately the same size, horsepower, gear ratio, and physical condition, because production will be limited to that of the least efficient unit.

Literature Cited

1. Brown, Robert D.
   1973. Pre-burn treatment of oaks with the ball and chain. Calif. Div. For. Range Improv. Stud. 21, 6 p.
2. Cain, Don.
   1971. The Ely chain. USDI Bur. Land Manage. Ely, Nev. 32 p.
3. Dell, John D., and Franklin R. Ward.
   1969. Reducing fire hazard in ponderosa pine thinning slash by mechanical crushing. USDA Forest Serv. Res. Paper PSW-57, 9 p. Pacific Southwest Forest and Range Exp. Stn. Berkeley, Calif.
4. Dodge, Marvin, and Cecil Pierce.
   1962. Anchor chain improves brush range land. Calif. Div. For. Range Improv. Stud. 7, 8 p.
5. Frank, Franklin F., Richard H. Bawcom, and W. James Clausen.
   1970. The brush disc–an effective tool for brushland range improvement. Calif. Div. For. Range Improv. Stud. 20, 6 p.
6. Gilbert, Richard, and Jef Schmidt.
   1970. Ball and chain brush crushing. Calif. Div. For. Range Improv. Stud. 19, 8 p.
7. Green, L. R., V. E. White, and T. R. Plumb.
   1963. Some brush conversion costs on southern California fuel-breaks. Fuel-Break Rep. 12, 18 p. Pacific Southwest Forest and Range Exp. Stn. Berkeley, Calif.
8. Lind, Carl.
   1960. Anchor chain, new conservation tool. USDI. Our Public Lands 9(3): 7-9.
9. Rangeland Seeding Committee.
   1970. Range seeding equipment handbook, 156p. Washington, D.C.
10. Ritchie, Roy W., and Marvin Dodge.
    1962. Marden brush cutter trials. Calif. Div. For. State For. Notes 11, 6 p.
11. USDA Forest Service, California Region.
    1971. Fireline handbook. San Francisco, Calif.
12. USDA Forest Service, Equipment Development Center.
    1970. Results of field trials of the Tree Eater–a tree and brush masticator. Equip. Dev. and Test Rep. 7120-1, 26 p. San Dimas, Calif.
13. USDA Forest Service, Equipment Development Center
    1971. Tractor attachments for brush, slash, and root removal. Equip. Dev. and Test Rep. 7120-3, 78 p. San Dimas, Calif.
14. USDA Forest Service, Pacific Northwest Region.
    1973. Trakmac tested for thinning and slash treatment on Eastside. R-6 Fuels Manage. Notes 1(5): 3. Portland, Ore.

Appendix A

Comparative Specifications of Industrial Track-Laying Tractors

Make and model	Approx. bare weight (lb)	Net engine horsepower at flywheel	Maximum speed (mi/h)			
			1st gear	2d gear	3d gear	4th gear
Allis-Chalmers:						
H-3	7,100	48	1.2	2.1	3.1	5.2
HD-3	7,300	43	1.2	2.1	3.1	5.2
HD-4	8,800	59	1.8	2.8	4.9	—
HD-6B	12,600	69	1.5	2.7	3.5	4.2
HD-6E	13,500	69	1.5	2.6	3.5	4.2
HD-6EP	14,100	75	3.0	5.9	—	—
HD-11B-DD	23,650	125	1.4	2.1	2.9	3.7
HD-11B-PS	24,500	140	2.8	5.2	—	—
HD-11E	22,000	123	—	—	—	—
HD-11EP	23,000	140	—	—	—	—
HD-16B-DD	36,100	172	1.4	2.1	3.0	3.9
HD-16B-PS	37,200	195	3.0	6.3	—	—
HD-19	—	163	—	—	—	—
HD-21-A	47,900	252	—	—	—	—
HD-21-B	57,100	273	2.5	4.2	6.4	—
HD-21-P	50,000	268	—	—	—	—
HD-41	104,000	524	2.6	4.5	6.5	—
J. I. Case:						
350	5,905	39	2.0	3.2	5.4	—
450	8,850	51	1.6	2.8	3.2	5.8
750	11,720	70	—	—	—	—
850	13,000	72	2.1	3.0	4.1	5.7
1000D	13,450	93	—	—	—	—
1150	15,357	85	1.7	2.9	3.4	6.0
Caterpillar:						
D4-D	13,100	65	2.0	3.6	5.8	—
D4D-DD	13,100	75	1.7	2.5	3.4	4.5
D4D-PS	13,700	75	2.0	3.6	5.8	—
D4-SA	15,100	—	2.5	2.9	3.5	4.0
D5	18,600	93	1.7	2.6	3.6	5.0
D5-DD	18,500	105	1.7	2.6	3.6	5.0
D5-PS	19,100	105	2.2	3.8	6.3	—
D5-SA	20,400	—	2.5	2.9	3.5	4.0
D6-8U	17,195	93	1.7	2.6	3.6	5.0
D6-B	18,300	93	1.7	2.6	3.7	5.2
D6-C	23,000	120	1.5	2.1	3.0	4.2
D6C-DD	23,000	140	1.7	2.5	3.5	4.9
D6C-PS	23,500	140	2.3	4.1	6.4	—
D6C-SA	26,100	—	2.5	3.0	3.5	4.0
D7-3T	25,130	93	1.4	2.2	3.2	4.6
D7-C	26,355	128	1.5	2.2	3.2	4.6
D7D-17A	26,555	140	1.5	2.2	3.2	4.6
D7-DD	30,400	180	1.5	2.2	3.1	4.6
D7E-47A	32,590	160	1.5	2.2	3.1	4.6
D7-PS	31,300	180	2.2	3.9	6.0	—

Comparative Specifications of Industrial Track-Laying Tractors—Continued

Make and model	Approx. bare weight (lb)	Net engine horsepower at flywheel	Maximum speed (mi/h)			
			1st gear	2d gear	3d gear	4th gear
Caterpillar (con.):						
D8-2U	34,160	144	1.7	2.3	2.7	3.1
D8-DD	49,000	270	1.6	2.1	2.9	3.7
D8-H35A	46,032	235	3.0	5.1	7.6	—
D8-H36A	47,180	235	1.5	1.9	2.7	3.5
D8-H46A	48,210	235	2.4	4.2	6.5	—
D8-PS	49,900	270	2.4	4.2	6.5	—
D9D-19A	57,990	320	4.1	5.6	7.8	—
D9E-50A	59,506	335	4.2	6.0	8.2	—
D9-PS	68,000	385	2.4	4.2	6.5	—
John Deere:						
JD350-B	8,163	42	1.4	1.9	3.3	6.5
JD450-B	11,600	65	1.8	2.8	4.3	6.7
International Harvester:						
TD-6 (62)	8,872	50	—	—	—	—
TD-7C-GD	12,410	50	1.4	1.9	2.0	2.6
TD-7C-PS	12,510	56	1.9	3.2	5.5	—
TD-8C-GD	15,400	63	1.4	1.9	2.0	2.6
TD-8C-PS	15,500	69	1.9	3.2	5.5	—
TD-9B-GD	12,540	66	1.7	2.5	3.4	4.4
TD-9B-PS	12,765	75	2.6	4.2	—	—
TD-9B-CA	12,481	—	1.9	2.7	3.7	4.5
TD-15B-GD	23,093	125	—	—	—	—
TD-15B-PS	23,217	125	—	—	—	—
TD-15C-GD	24,507	140	1.6	2.1	2.8	3.9
TD-15C-PS	24,163	140	2.7	3.5	4.6	6.0
TD-15C-CA	24,762	—	2.1	2.9	3.7	4.4
TD-20B-PS	30,876	160	—	—	—	—
TD-20C-PS	32,191	170	2.4	3.2	4.7	6.1
TD-20C-CA	32,024	—	2.2	2.7	3.2	3.7
TD-25B-PS	50,000	230	2.6	3.3	5.0	6.3
TD-25B-GD	49,565	230	1.7	2.1	2.6	3.3
TD-25C-GD	52,095	285	1.5	1.9	2.2	2.9
TD-25C-PS	52,495	285	2.6	3.3	5.0	6.3
Komatsu:						
D50-15	20,280	90	1.6	2.2	3.4	5.8
D50P-15	27,120	90	1.6	2.2	3.4	5.8
D50PL-15	27,340	90	1.6	2.2	3.4	5.8
D60-6	27,670	140	1.6	2.2	3.1	4.3
D60E-6	28,620	155	1.6	2.3	3.3	4.6
D60P-6	36,160	140	1.6	2.2	3.1	4.3
D60PL-6	35,050	140	1.6	2.2	3.1	4.3
D65-6	28,110	140	2.2	4.0	6.4	—
D65E-6	29,060	155	2.3	4.0	6.6	—
D80-12	37,920	180	1.5	2.1	3.2	4.6
D85-12	38,360	180	2.0	2.8	4.2	5.9
D150-1	57,300	300	1.6	2.2	3.0	4.7
D155-1	57,300	300	2.3	4.2	7.3	—
Massey-Ferguson:						
MF 200	7,715	44	1.7	2.3	3.4	5.7
MF 300	14,700	65	2.2	4.0	—	—
MF 400	20,585	85	2.2	4.0	—	—
MF 2244	6,600	44	—	—	—	—

Comparative Specifications of Industrial Track-Laying Tractors—Continued

Make and model	Approx. bare weight (lb)	Net engine horsepower at flywheel	Maximum speed (mi/h)			
			1st gear	2d gear	3d gear	4th gear
Massey-Ferguson (con.):						
MF 3366	18,464	75	2.1	4.0	—	—
MF 500	25,800	136	2.4	4.1	—	—
Terex:						
82-30	44,500	225	1.9	3.8	7.3	—
82-30T	44,500	225	1.9	3.8	7.3	—
82-40	53,170	275	2.1	3.7	6.1	—
82-40T	54,200	290	2.1	3.7	6.1	—
82-80	73,000	440	1.7	3.5	6.9	—

Appendix B

Suggested Form for Summarizing Costs of Chaparral Modification

APPROXIMATE RATES AND COSTS OF FUEL MODIFICATION OPERATIONS

Project Name _____ Location _____ Agency _____

Name and Title _____ Fuel Type _____ Tons per Acre _____

Type and size of equipment	Tractor model, horsepower rating	Number of acres treated	Slope percent	Acres per hour	Direct cost: dollars per acre	OTHER PER ACRE COSTS				
						Mileage	Planning	Environmental statement	Supervision	Other
			0-20							
			20-35							
			35+							
			0-20							
			20-35							
			35+							
			0-20							
			20-35							
			35+							

Remarks: (Include any helpful information such as soil types, plant species composition, rockiness, rental rates of equipment, use of swampers, etc.)

Appendix C

Relation of Production Rate to Swath Width and Speed of Implement

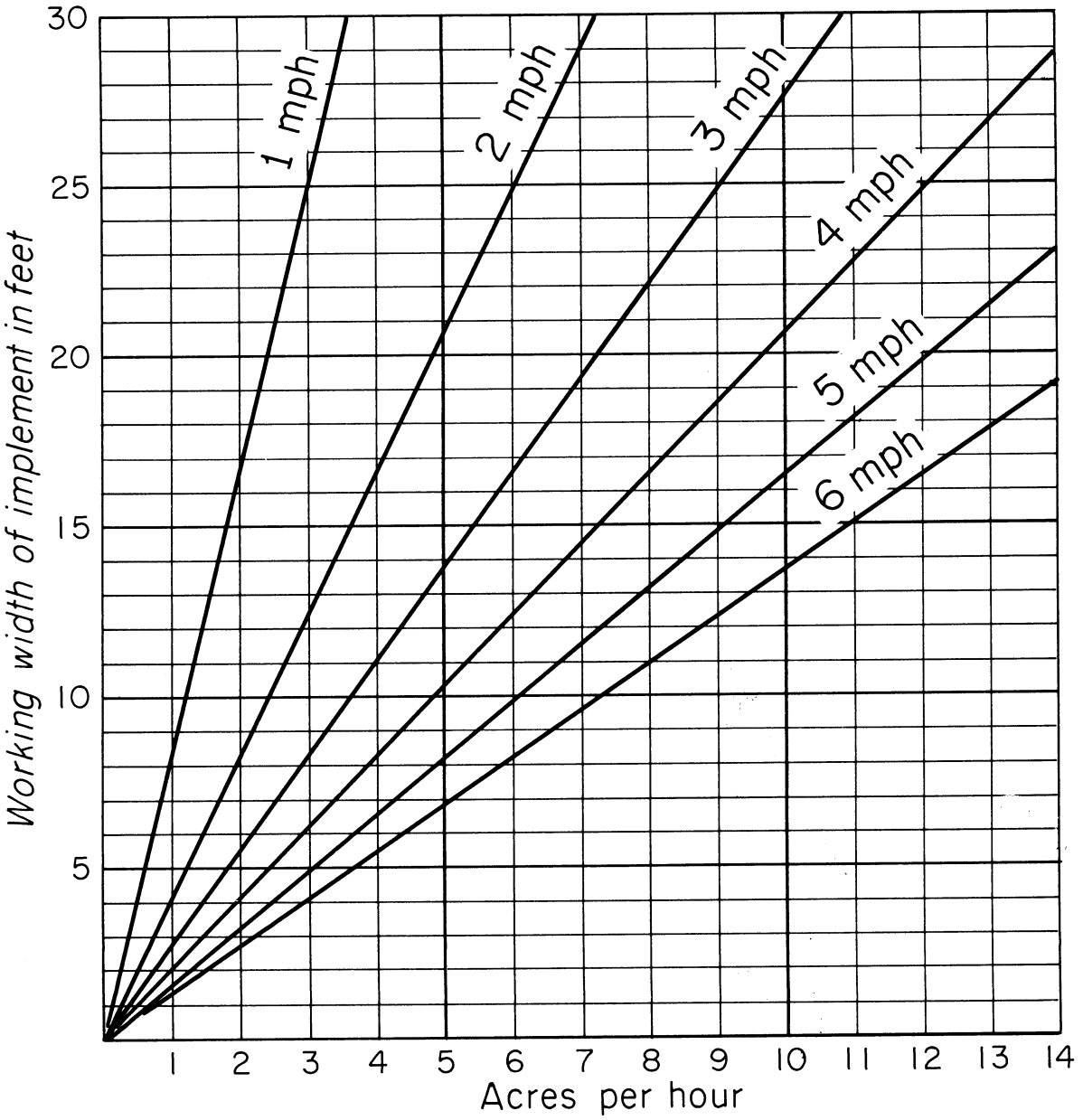

Source: Rangeland Seeding Comm. (*9*).

Appendix D

Contract Specifications for the Modified Chain[1]

Technical Specifications

Material Specifications

Cross bar: 1 by 4 by 18 inches

Hardness (B.H.N.)	350/380
Yield strength	170,000 P.s.i.
Tensile strength	180,000 P.s.i.
Reduction in area	40 percent
Elongation in 2 inches	15 percent

Spacer: 1/4 by 1 by 4 inches; hot rolled steel or better

Welding rod: 7018 or better

Welding

Each spacer and cross bar must be welded to a chain link in a professional manner.

The objective is to weld the cross bars to the anchor chain in such a manner as to take severe use without breaking the weld.

All areas of contact between cross bar, spacer, and chain link must be welded. All areas of close proximity between cross bar, spacer, and chain link must be welded. Exhibits 1, 2, and 3 show relationship of cross bar and spacer to chain link with weld areas. All welds are to be 3/4 inch 7018 fillet welds.

Cutting Specifications

Remove the center link on each shot of chain. This will result in eight sections approximately 45 feet long.

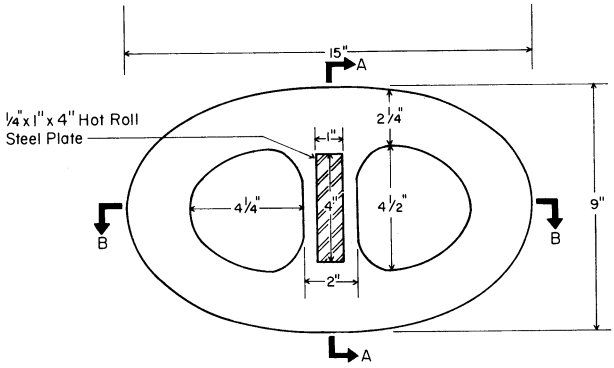

Typical Chain Link

EXHIBIT 1

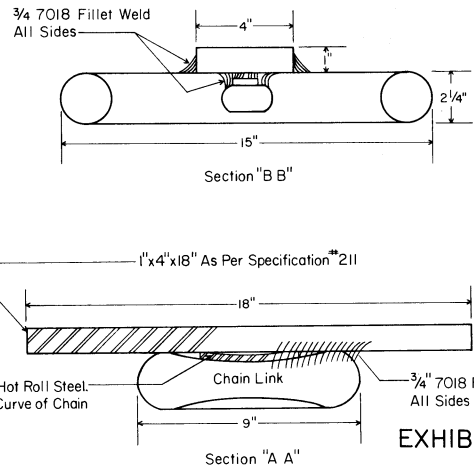

EXHIBIT 2

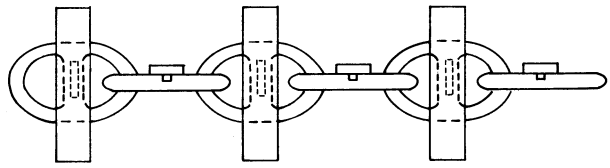

Multiple Chain Unit

EXHIBIT 3

Inspection and Acceptance

The Government may make periodic inspections to insure that specifications are being met.

Final inspection and acceptance will be performed after chain is returned to the F.O.B. point.

Measurement and Payment

Method of Measurement

The actual number of bars accepted by the Government.

Basis of Payment

Payment at the unit price for the number of bars accepted.

[1]Adapted from specifications drawn up by the Cleveland National Forest, based on suggestions from the San Diego County Department of Agriculture. Material specifications are those of Wearalloy B heat-treated bars manufactured by Ford Steel Co., Maryland Heights, Mo.

This publication reports research involving pesticides. It does not contain recommendations for their use, nor does it imply that the uses discussed here have been registered. All uses of pesticides must be registered by appropriate State and/or Federal agencies before they can be recommended.

CAUTION: Pesticides can be injurious to humans, domestic animals, desirable plants, and fish or other wildlife—if they are not handled or applied properly. Use all pesticides selectively and carefully. Follow recommended practices for the disposal of surplus pesticides and pesticide containers.

PROTECT

Use Pesticides Safely

FOLLOW THE LABEL

U.S. DEPARTMENT OF AGRICULTURE

U.S. GOVERNMENT PRINTING OFFICE: 1976 O—579-942