EFFECTS OF GRAIN-RECEIVING SYSTEM ON COMMINGLING IN A COUNTRY ELEVATOR

M. E. A. Ingles, M. E. Casada, R. G. Maghirang, T. J. Herrman, J.P. Harner III

ABSTRACT. *The shift to quality-based marketing has challenged the grain-handling industry to meet desired purity levels as part of identity-preservation programs. Very few resources are available for the development of management strategies. This study measured commingling during grain transfer as influenced by the receiving configuration of an elevator. The facility, located at Manhattan, Kansas, has three receiving pits and one bucket elevator with a handling capacity of 190 t/h (metric ton per hour). The experiments involved moving soybeans through one of the receiving pits, followed by corn through the same flow path, without special cleaning between the two operations. Corn samples, collected at specific time intervals, were used to calculate commingling, the percentage by mass of soybean kernels mixed in corn. Commingling was greater than 1% only during the first 135 s (first 2 t, 2 metric ton, received), except for the gravity-type pit configuration where commingling remained in excess of 1% for the duration of the test (840 s or 7.3 t of grain). Measured mean cumulative commingling at the end of operation was 1.25%, 0.30%, and 0.23% for the combined effect of gravity-type pit and elevator leg, combined effect of elevator leg and pit with a drag conveyor, and effect of elevator leg, respectively. ARENA simulation was used to predict commingling using different levels of initial impurities of incoming grain. The model predicted that a 10-t load through a pit with drag conveyor would result in a cumulative commingling of 0.28%, of which 0.27% would be from the effect of the elevator leg.*

Keywords. *Grain receiving, Commingling, IP system, ARENA simulation, Grain elevator, Identity preservation.*

The grain-handling industry is changing from a commodity-based to a quality-based marketing system because of competition, advances in technology, and ever-increasing demand from consumers. Previously, commodity grains were subjected to limited quality considerations; now, in a quality-based marketing system, new, specific quality traits may be required while other traits are not accepted or must be at very low levels in the grain. Such change emphasizes the importance of grain elevators, the first collection point, in meeting market-driven purity levels and ensuring preservation of crop identity. Existing elevator facilities in the United States are characterized by high-volume, high-speed operations, posing a challenge in implementation of identity preservation (IP) programs. In 1997, country elevators in Kansas were found to be limited by the receiving configuration and added costs that come with the inclusion of segregation and adoption of the IP system in handling operations (Baker et al., 1997). A survey conducted in 1999 indicated that nearly 18% of 100 Midwestern grain elevators segregate different grains, especially those that have been altered using genetic engineering (Pesticide Education Resources, 1999). A similar survey in 2000 indicated that nearly 44% of 1200 U.S. elevators have plans to segregate bio-engineered grains and oilseeds (Lin et al., 2002).

Previous studies (Hurburgh, 1994; Wheeler, 1998; Herrman et al., 1999; Maltsbarger and Kalaitzandonakes, 2000; Hurburgh, 2003) have estimated the opportunities, revenues, benefits, and costs associated with segregation and IP. Other studies (King, 1995; Bullock et al., 2000; Herrman et al., 2001; Krueger et al., 2000; Herrman et al., 2002) have investigated the impact of design configuration on the flexibility of elevator facilities in handling specialty crops and on their ability to maintain product identity. Nielsen and Maier (2001) identified key areas in an elevator that provide challenges for IP: receiving pits, storage bins, legs, and other conveyors.

Available information on grain commingling is limited. Ingles et al. (2003) quantified the commingling effects of handling equipment during transfer of corn with different varieties in a research elevator with a nominal capacity of 76 t/h (3000 bu/h). Results showed average cumulative commingling values (percent of undesirable grain by mass in the total grain mass) of 0.24% for the grain cleaner, 0.22% for the inline weighing scale, 0.01% for the inline grain scalper, and 0.18% for the combined effect of the pit with a belt conveyor and the elevator boot. Information on possible commingling of handling different types of grain and possible effects of facility design is not available. Data on these would supplement existing information available for

Submitted for review in February 2005 as manuscript number FPE 5783; approved for publication by the Food & Process Engineering Institute Division of ASABE in May 2006.

Contribution No. 04-352-A of the Kansas Agricultural Experiment Station, Manhattan, Kansas.

The authors are **Maria Elena A. Ingles,** Graduate Student, Kansas State University, Manhattan, Kansas; **Mark E. Casada, ASABE Member Engineer,** Agricultural Engineer, Lead Scientist, Grain Marketing and Production Research Center, USDA-ARS, Manhattan, Kansas; **Ronaldo G. Maghirang, ASABE Member Engineer,** Professor, Department of Biological and Agricultural Engineering, Kansas State University, Manhattan, Kansas; **Timothy J. Herrman, ASABE Member,** Texas State Chemist and Director, Office of the Texas State Chemist, Texas A&M University, College Station, Texas; and **Joseph P. Harner III, ASABE Member Engineer,** Professor, Department of Biological and Agricultural Engineering, Kansas State University, Manhattan, Kansas. **Corresponding author:** Mark E. Casada, Grain Marketing and Production Research Center, USDA-ARS, 1515 College Ave., Manhattan, KS 66502; phone: 785-776-2758; fax: 786-537-5550; e-mail: casada@gmprc.ksu.edu.

U.S. grain handlers in the assessment of segregation feasibilities and development of management strategies for implementation of IP systems in elevators. No data on commingling in a commercial elevator has been reported.

Field tests are always useful for validation purposes, but most processes generally require investment of time and money. Simulation models are widely used in manufacturing and handling operations in generating similar system flow and providing close estimates of desired outputs with minimum costs and risks of disrupting activities and production schedules. In the grain-handling industry, Berruto and Maier (2001) created models to simulate receiving operations and predict delay times.

Herrman et al. (2001) reported the following operating characteristics from 50 Kansas grain elevators during wheat harvest: elevator number and storage size distribution, elevator configuration and capacity (receiving pits and elevator legs), time of sampling and receiving activities, and capacity utilization during harvest. Using this data, Herrman et al. (2002) generated three models corresponding to typical small, medium, and large elevators; to assess elevator capabilities to segregate material during peak harvest seasons. These models were validated with data from three additional grain elevators, one each of small, medium, and large size. Verification and validation of the models used two techniques, historical data verification (Law and Kelton, 1991) and a degenerate test for model validation (Sargent, 1999).

Of the simulation packages available on the market, Extend (Imagine That, Inc., San Jose, Calif.) and SIMAN/ARENA (Systems Modeling Corporation, Sewickley, Penn.) are commonly used in grain-handling operations. These packages can model continuous and discrete operations and have built-in tools and pre-built components that facilitate building, analysis, verification, and validation of models. Given the high cost of field tests, our approach was to work with an existing model for country elevators from Herrman et al. (2002), conduct additional field tests on grain commingling in one facility, and modify the existing simulation model using the commingling data from field tests. Commingled grain accumulates as grain moves through the system (e.g., see Ingles et al., 2003); thus, the data from these tests that show the amount of commingling added by the grain receiving process, can be used to examine other scenarios with different initial amounts of commingling.

Objectives

The objective of this study was to evaluate commingling in a country elevator, specifically to (1) determine the effects of different types of receiving configuration on commingling, and (2) develop prediction curves describing possible commingling of grains with different initial purities.

Materials and Methods

Receiving Configuration and Handling Operations

A large percentage of the facilities operating in the central region of the United States are designed to handle high-volume homogeneous commodity grains and oilseeds with handling capacities ranging from 3 t/h to more than 600 t/h (Kansas Grain and Feed Association, 2002). Most country elevators in Kansas are equipped with two or three receiving pits and two or more elevator legs (Herrman et al., 2001). Facilities with multiple pits and elevator legs have more flexibility in segregating and handling crops with specialized traits. Not only are elevators different in the arrangement of handling equipment, facilities also differ in receiving capabilities, including volume of grain the pit can handle, and design and type of grates. There are also variations in the methods of conveying grain from the bottom of the pit to the storage bins. Some facilities are equipped with gravity-type pits, whereas others have conveyors, such as drag, screw, or belt conveyors, to transfer grain from the bottom of the pit to the boot of bucket elevators.

In this study, the elevator of the Farmer's Cooperative Association, in Manhattan, Kansas, was selected. It has a storage capability of 22,181 t (815,000 bu), one bucket elevator, and three receiving pits, two of which are gravity-type and the other a pit with a drag conveyor at the bottom (fig. 1). Each of the three pits holds 23 to 27 t (843 to 990 bu) of grain. Maximum handling capacity of the elevator leg (hereafter referred to as the "leg") is 191 t/h (7000 bu/h). Like most country elevators, this facility is not equipped with inline cleaning equipment or an inline weighing scale.

Corn, soybeans, wheat, and millet are the top four grains and oilseeds received at this facility. The current segregation program used is mainly based on grain type, and grain is handled as a commodity crop. Almost no specialty grain is delivered to this facility. Sampling of inbound trucks is done at the truck scale area using probes, a few meters away from the driveway of the receiving station. Samples are analyzed for grain type, moisture, percentage of dockage, and test

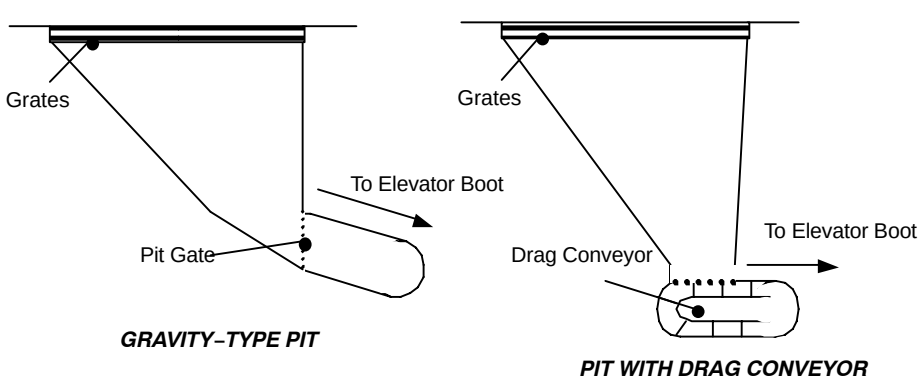

Figure 1. Schematic diagram of pits in the elevator facility of the Farmer's Cooperative Association, Manhattan, Kan.

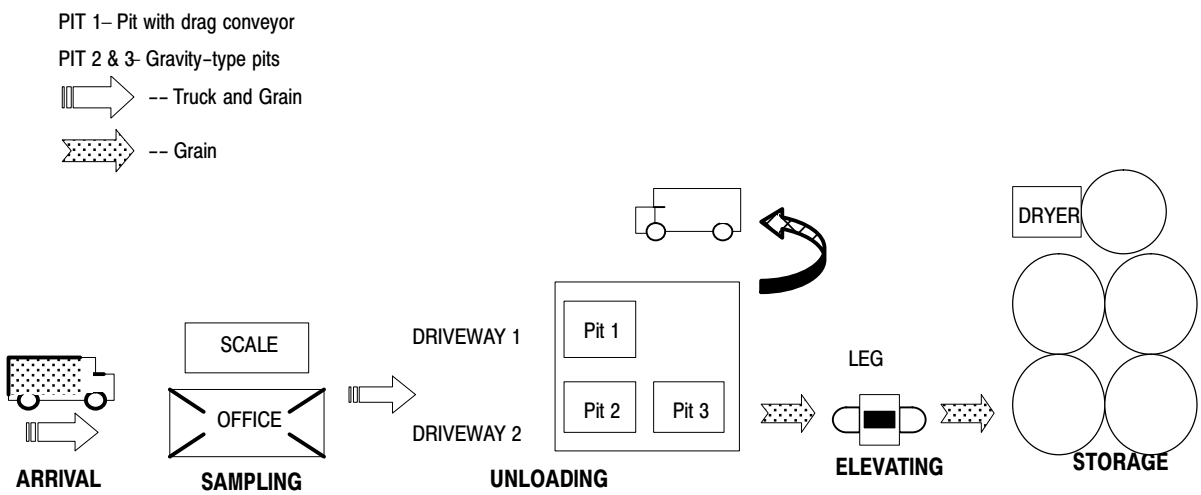

Figure 2. Grain receiving flow in Farmer's Cooperative Association's elevator facility.

weight. Based on results, trucks are directed to a specific driveway. Foreign material is measured when grain is graded but other analyses for grain purity are not normally carried out. Figure 2 illustrates the schematic diagram of the facility and the direction of grain flow.

Grain Quality and Physical Characteristics

Soybeans and yellow corn, obtained from farms within a 30-km radius of the elevator facility, were used in the experiment. The grain and oilseed studied had been previously delivered to the facility and stored in bins. Although some data on the quality of grain had been previously collected when it arrived, data for amounts of impurities were not available; hence, re-sampling was done during experiments to quantify the quality and initial amounts of impurity. The average initial impurity of the tested grain was about 0.18% with broken corn and foreign material (BCFM) content ranging from 3.7% to 4.2% (table 1). Moisture content and the test-weight readings showed a significant difference ($p < 0.05$) between the corn loads used for the three tests.

A flat-bottom truck with a capacity of 9.5 t (350 bu) was used as the transport vehicle. A nine-point probe sampling was done based on industry guidelines (USDA-GIPSA, 2001) for trucks containing grain less than 1.2 m (4 ft) deep. For times when the truck was unavailable, a mechanical diverter sampler (Gamet DT sampler, Seedburo Equipment Co., Chicago, Ill.) was installed at the load out spout to collect representative samples at intervals of 30 s. Samples were analyzed for moisture content, test weight, impurity, and percentage of foreign materials (table 1).

Grain Transfer Process

Three types of tests were conducted to determine the effect of facility configuration on commingling: combined leg and gravity-type pit, combined leg and pit with a drag conveyor, and leg alone. Three replications were done for each test; a replicate consisted of one load of soybeans followed by a load of corn with no special cleaning between the two loads. This was done to simulate the usual handling practice during receiving operations. However, before each replication, the pits and truck were thoroughly cleaned using an air blower to remove grain left from the previous run.

In Test 1 (combined leg and gravity pit) the truck containing soybeans was weighed and representative samples were collected to establish initial grain quality and impurity. With the pit gate closed, the grain was dumped into the previously cleaned gravity-type pit. The gate was only opened when the truck was emptied and had left the receiving area to be weighed again.

After cleaning, the truck was filled with yellow corn, weighed, and sampled. Unloading of corn took place when the reading of the ammeter at the leg decreased to 40 amp, indicating the soybeans had been moved to a specific storage bin and the bucket elevator was empty and ready to handle the next grain load. At the same time, the pit gate was closed during the unloading process. An average waiting time of 3 min was used between the end of moving soybeans and the unloading of corn. This allowed time for adjusting diverters and changing bins. The facility design made it almost impossible to physically check for residual grain in conveyors and spouts; as such, the elevator was left running for at least 5 min between replications and at least 10 min

Table 1. Initial grain quality and characteristics of incoming corn.

Test	Initial Impurity[a][b] (S.D.), %	Initial BCFM (S.D.), %	Moisture Content (S.D.), %	Test Weight (S.D.), kg/hL
1 – Combined leg and gravity pit	0.18^a (0.10)	4.2^a (1.8)	13.62^c (0.22)	77.2^a (1.5)
2 – Combined leg and pit with drag conveyor	0.17^a (0.08)	3.7^a (0.6)	14.17^a (0.24)	74.9^b (2.5)
3 – Bucket elevator	0.19^a (0.10)	3.7^a (1.0)	13.95^b (0.22)	77.4^a (1.4)

[a] Means in the same column with the same superscript are not significantly different at the $p = 0.05$.
[b] Impurity: soybeans in yellow corn.

between tests, allowing cleaning time for the pits and truck. During the transfer of corn, samples were collected at specific time intervals to determine the combined commingling effects of the gravity pit and bucket elevator.

Test 2 (combined leg and pit with a drag conveyor) followed the same methods used in Test 1 of weighing the truck and collecting representative samples; except grain was dumped into the pit with a drag conveyor at the bottom. Three (3) min after the ammeter reading dropped back to 40 amp, the pit was closed and corn was dumped into the same pit, the diverter was adjusted, and bins were changed. Samples to determine the commingling of soybeans in corn as influenced by the leg and the pit with a drag conveyor were collected during the transfer of corn.

Two pits were used in Test 3 (bucket elevator): one for soybeans and another for corn. This was done to eliminate the possible mixing of different grains at the pit and to quantify the effect of the bucket elevator on final commingling values. After probe sampling at the scale area, soybeans were dumped into the pit with a drag conveyor, elevated, and stored in a separate storage bin. While soybeans were transferred, the same truck was checked for residual soybeans, filled with corn, sampled, and the corn unloaded into the gravity-type pit. Previous waiting times of 3 min between grain loads and 5 min between replications were followed in this test. The same sampling procedure was also used in the collection of samples during the transfer of corn.

Grain Sampling, Analysis, and Sorting

To facilitate collection of samples at specific intervals, a mechanical diverter-type sampler (Gamet Diverter-type, Seedburo Equipment Co., Chicago, Ill.) was used. Limited by design of the facility, the sampler could not be positioned immediately after the bucket elevator; the grain flow was modified by moving corn through a storage bin with a loading spout located right above a dump pit. The mechanical sampler was placed on the grates of a pit, directly below the loading spout (fig. 3). The opening of the spout was adjusted to facilitate continuous grain flow and prevent the possibility of choking at the sampler. Samples were collected at 15-s intervals for the first 3 min, 30 s for the next 2.5 min, 45 s for the following 3 min, and 60 s for the rest of the loading process. Samples were kept in individually sealed plastic bags, labeled, and stored at 4°C for later analysis.

Grain samples were analyzed using a moisture-content analyzer (Motomco 919® Automatic Moisture Meter, Seedburo Equipment Co., Chicago, Ill.), a test-weight scale (USDA-GIPSA, 1997), and dockage tester (Carter Day Dockage Tester, Seedburo Equipment Co., Chicago, Ill.). Mechanically cleaned samples were manually separated to determine percentages of soybeans mixed in the corn samples during grain transfer. Based on the mass of separated soybeans, instantaneous and cumulative commingling were calculated. Instantaneous commingling is the amount of soybeans from the first load mixed into the collected corn samples (eq. 1), whereas cumulative commingling was the weighted average of instantaneous commingling for the whole load of corn (eq. 2) (Ingles et al., 2003). Means and standard deviations of collected data were analyzed by using statistical techniques, while comparison of effects influenced by the different receiving configuration was done using Fisher's least-square difference (LSD).

$$\begin{matrix}\text{Instantaneous}\\ \text{Commingling}\end{matrix} = \frac{\text{mass of soybeans}}{\text{total sample mass}} \tag{1}$$

$$\begin{matrix}\text{Cumulative}\\ \text{Commingling}\end{matrix} = \frac{\sum\left(\begin{matrix}\text{feed}\\ \text{rate}\end{matrix} \times \begin{matrix}\text{sampling}\\ \text{interval}\end{matrix} \times \begin{matrix}\text{Instantaneous}\\ \text{Commingling}\end{matrix}\right)}{\text{total mass of load}} - \left\{\begin{matrix}\text{Initial}\\ \text{Impurity}\end{matrix}\right\} \tag{2}$$

where the mass quantities are in kg, the feed rate in kg/s, the sampling interval in s, and the initial impurity and all commingling values are dimensionless (kg of soybeans per kg total).

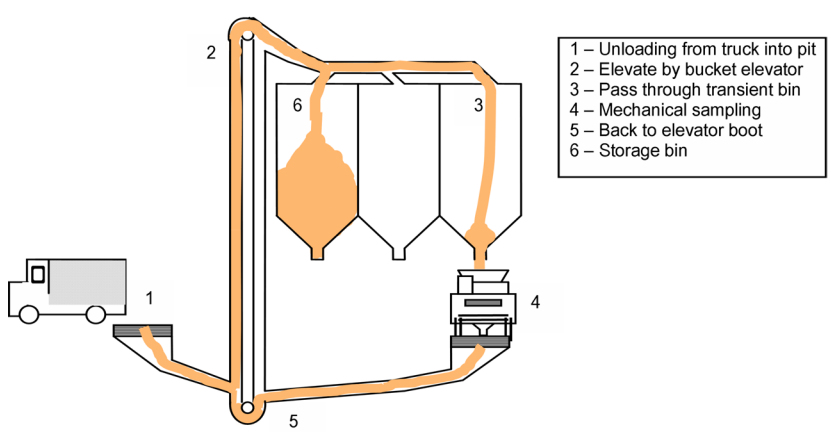

Figure 3. Grain flow for sampling process.

Model Development and Simulation

The ARENA (Systems Modeling Corporation, Sewickley, Penn.) simulation program developed by Herrman et al. (2002) for segregating wheat was modified to model the grain-receiving system. New components were incorporated into the revised program, including a bucket elevator as part of the receiving system and the initial impurity of incoming grain as integral information to predict the commingling at the end of the grain-transfer process. The different activities in grain handling were divided into three modules: arrival and sampling, unloading, and elevating and storage. The system was represented using the object-oriented features of ARENA and data collected from previous tests (fig. 4). The model, simulating consecutive loading of grain with different levels of impurity, was applied to two facilities with different receiving configurations. The first simulated facility was equipped with one receiving pit with a drag conveyor and a bucket elevator; the second had two dump pits and a common elevator leg.

In Module 1 (Arrival and Sampling), the inbound truck and grain details were determined. Samples to determine the type of grain and initial impurity were collected after the truck had been weighed. Collected information was kept in a database and later used in the calculation of commingling. The truck then entered the driveway of a pit, which may have been assigned to a specific type of grain or may have been empty and available (Module 2: Unloading). When a pit was unavailable, grain was not unloaded until the pit was emptied and ready, the diverter had been adjusted, and the bins had been changed. The influence of pit design on commingling was then determined at this point if the potential effect of the leg had not been considered. Otherwise, leg effect was incorporated in the calculation (Module 3: Elevating and Storage). For facilities equipped with other handling

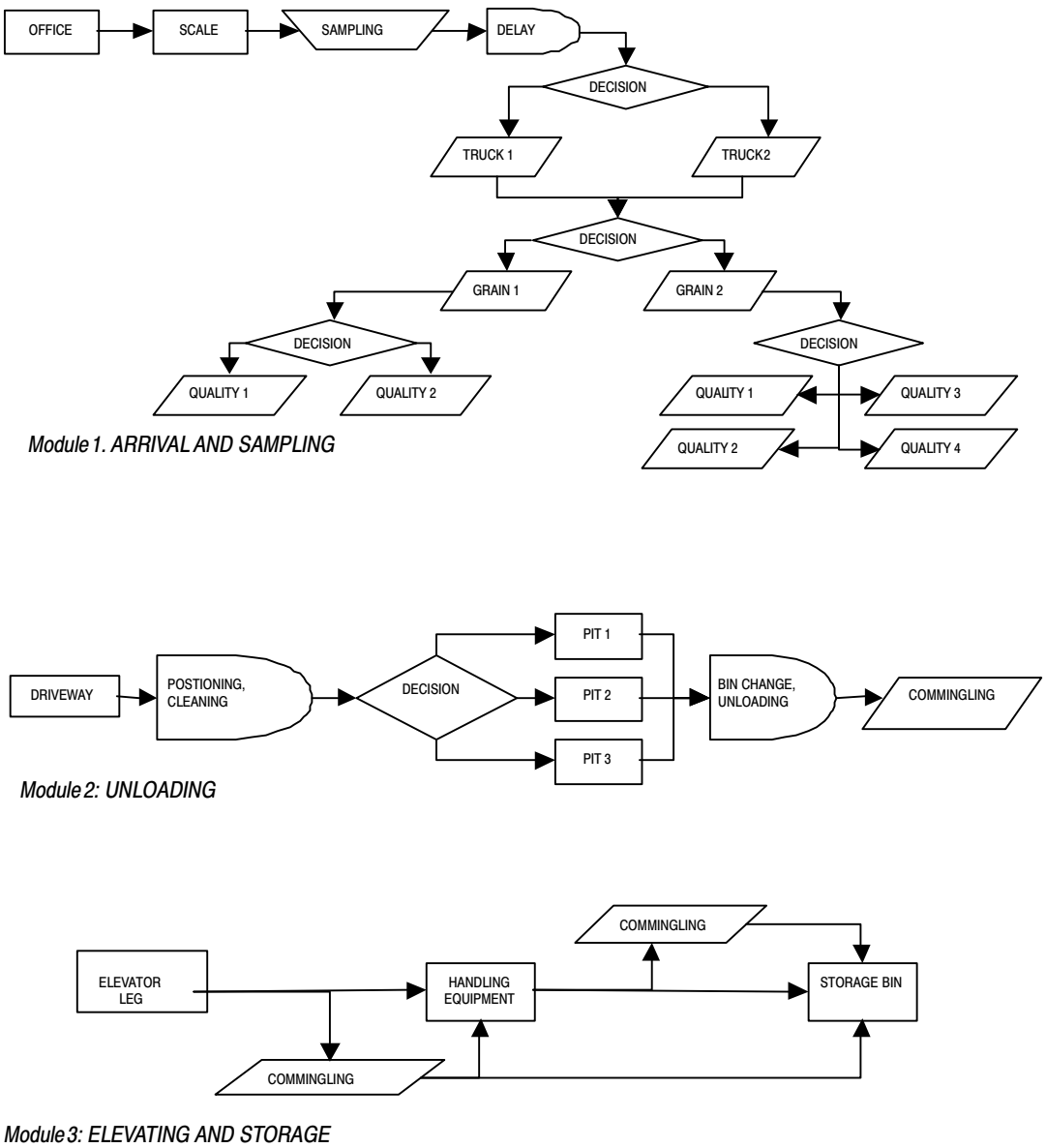

Figure 4. Model details for simulation using ARENA package.

equipment like garner, scale, and cleaners, commingling effects were included in the computation.

The simulation evaluated the influence of configuration and initial impurity by using different combinations of load ratios representing the likelihood of receiving soybeans and corn. Four loading combinations were used to simulate typical loading schedules in grain receiving (table 2). A 50:50 combination (handling corn right after a load of soybeans) is most likely practiced in single-pit, single-leg facilities where grain loads are handled one after the other with limited room for grain segregation. A 33:67 combination simulated a loading schedule where two loads of corn were received after soybeans. Facilities with two or more pits and/or legs usually incorporate this handling practice to prevent mixing of different grains with minimum equipment cleaning in between loads of different grain varieties. To represent receiving three and four loads of corn after loading soybeans, 25:75 and 20:80 load combinations were used, respectively. During peak harvest seasons, handling two or more load combinations is likely to happen; hence, the combinations were doubled and effects of commingling were determined.

The mass of incoming grain varied based on the size of delivery trucks. Herrman et al. (2002) classified the truck sizes as small (<11 t or <400 bu), medium (12-22 t or 450-800 bu), and large (>22 t or 800 bu). In this model, small truck size with an average hauling capacity of 7.8 t (285 bu), similar to the truck used in the experiment, was used. Incoming grain was assumed to have an initial impurity level between 0.0% and 1.0%; these values were used in the simulation to predict the final commingling. The simple additive characteristic assumed for commingled grain at each handling step made it possible to apply the commingling results from the field tests to other levels of initial commingling and calculate the increase in commingling.

Results and Discussion

Grain Sampling and Physical Characteristics

There were no significant differences ($p > 0.05$) in the initial impurity and BCFM content of incoming grain. Although significant differences ($p < 0.05$) were observed in the moisture content and test weight, variation between loads was less than 1 percentage point for the amount of moisture in the grain and kg/hL for test weight (table 1). The minimal difference in sample averages for these initial values was normal for corn coming from a single bin.

The mass of collected samples differed significantly ($p < 0.05$). Samples from Test 1 (combined leg and gravity-type pit) had the least mean mass at 0.35 kg, while samples from Test 2 (combined leg and pit with a drag conveyor) and Test 3 (bucket elevator) had mean masses of 0.53 kg. Variation in sample masses could be due to the variation in the average feeding rates of grain through the diverter sampler (table 3).

Grain Transfer Process

Commingling at Receiving

The variation in the receiving configuration resulted in some differences, both in instantaneous (fig. 5) and cumulative commingling (table 3). Variations in the possible amount of soybeans mixed into the corn load as the loading process progressed are shown in figure 5. Test 1 (combined leg and gravity pit) had the greatest commingling, although average initial impurities were low (less than 0.2%) for all three tests. Commingling in Tests 2 and 3 followed the same decreasing pattern with comparable amounts of soybeans in the corn samples. The data indicated that type of receiving pit can influence the amount of commingling that occurs in an elevator.

Test 1 - Combined Effect of the Leg and a Gravity-Type Pit

For a total load of 5.8 t (228 bu), instantaneous commingling was about 2.6% (fig. 5). The percentage dropped within the first ton of load to about 1.8%, but leveled off at 1.5%, contrary to the expectation that flushing would decrease instantaneous commingling to a level close to the initial impurity after the first few tons of load. Results might be influenced by the receiving configuration and/or rerouting of the grain to accommodate the mechanical DT sampler. Although we made sure the opening of the load-out bin was large enough that no residual grain should gather at the bottom, this could still potentially happen as it was not possible to visually check the bottom of the bin. The 5.8-t load might not be enough to see the effect of flushing for this particular design of receiving. Variation in the feeding rate and average sample mass may have contributed to the commingling values (table 3). For an elevator facility with the same receiving configuration, an average load of 5.8 t would result in a final commingling of 1.31%, significantly more than in the other tests ($p < 0.05$) (table 3).

Test 2 - Combined Effect of the Leg and Pit with a Drag Conveyor

In terms of capacity and clean-out efficiency, drag conveyors are preferred by many grain handlers over belt and screw conveyors (Misra, 1986). The instantaneous

Table 3. Average mass of samples and final commingling effect of receiving configuration.

Test	Total Load[a] (S.D.), t	Feeding Rate (S.D.), t/h	Sample Mass (S.D.), kg	Final Commingling (S.D.), %
1 – Combined leg and gravity–type pit	5.80^b (1.7)	39.9^a (10.3)	0.35^b (0.21)	1.31^a (0.58)
2 – Combined leg and pit with drag conveyor	8.10^a (0.5)	50.7^a (9.3)	0.53^a (0.10)	0.30^b (0.08)
3 – Bucket elevator	8.22^a (0.1)	52.4^a (5.4)	0.53^a (0.07)	0.23^b (0.10)

[a] Means in the same column with the same superscript are not significantly different at $p = 0.05$.

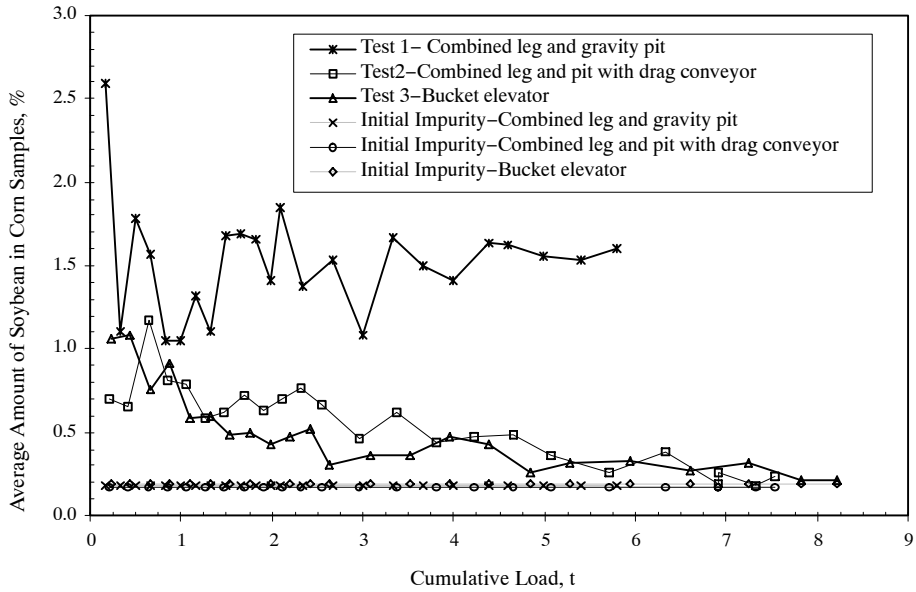

Figure 5. Commingling effects of receiving pit and elevator leg.

commingling never reached 1%, except in the sample collected 45 s (1.4 t or 51.3 bu) from the start of loading (fig. 5). This indicated that very little residual grain was left in the pit and conveying system after the 3-min interval allowed for adjusting the diverter and changing the bin. The amount of soybeans in corn continued to decrease as the loading process progressed until it reached the initial impurity level 8 min from the start of loading (6.4 t or 234.7 bu). This result was consistent with previous work on the combined commingling effect of an elevator leg and pit with a belt conveyor (Ingles et al., 2003). Both tests showed that instantaneous commingling approached a negligible level after loading 6 t. Although the elevator facilities used for the two studies are different in design, it can be inferred that the difference in design of the pit (fig. 1) can affect subsequent mixing of grain. At the end of the grain-transfer operation, the total amount of soybeans was 0.30%.

Test 3 - Commingling Effects of the Bucket Elevator

A comparable trend was observed between the effect of the leg and the combined effect of the leg and pit with a drag conveyor. For the first t of load, instantaneous commingling was about 1%, but decreased to half of a percent within the next half t of load (55 bu) (fig. 5). The amount of soybeans further decreased and approached the initial impurity level of 0.2% after 7.9 t (289.7 bu). After the loading process, final commingling was calculated at 0.23%, comparable to, but slightly less than in the test made on the combined effect of the leg and the pit with a drag conveyor (table 3). Results of the three tests showed that the receiving pit influenced the amount of commingling. In this facility, receiving grain using a gravity-type pit resulted in a higher commingling value than handling using a pit with a drag conveyor. However, this is counter intuitive because, theoretically, a gravity pit could be designed to be extremely smooth. Apparently some quirk of construction caused grain to hang up, resulting in these high commingling values.

Simulation Model Performance and Predictions

Major components in the grain-receiving operation of a country elevator -- stations, equipment, storage, and transport devices -- were graphically represented using the different simulation modules that come with the SIMAN/ARENA modeling package. Results gathered from the experiments were used to label and define each component of the modules. Data on the combined commingling effect of the leg and gravity pit were not used due to the possibility that flushing may have been incomplete and may have resulted to unrealistic projections. Only data obtained from the tests with the bucket elevator and the pit with a drag conveyor showed decreasing levels of commingling, and hence were used in development of the simulation.

The simulation was run to obtain the expected commingling of a 10-t (367-bu) load in an elevator with a receiving configuration similar to the tested facility (fig. 6). Grain with an initial impurity of 0% coming into a facility equipped with a pit with a drag conveyor at the bottom and bucket elevator may generate a commingling of at least 0.28% (fig. 6a). The simulation predicted that in facilities where two pits are available, different grains can be unloaded separately, thus eliminating the effect of dump pits and leaving the bucket elevator as the main contributing factor to final commingling. For facilities with this receiving configuration, the model predicts that loading different grain varieties with the same bucket elevator may result in a final commingling of about 0.27% (fig. 6b). For both configurations, cumulative commingling at the end of a 10-t load increased relative to the amount of initial impurity. These results were generated from a simulation of handling different types of grain with minimal cleaning between loads. Potential human errors that may happen during operations were not considered.

Of the different combinations, the 50:50-ratio showed the greatest potential of grain mixing during the transfer process, while the other combinations resulted in commingling values very close to the initial impurity level of the grain. The effects of having two or more combinations of the same ratio resulted in no observed differences. The predicted values generated indicated that combining the same grains in the

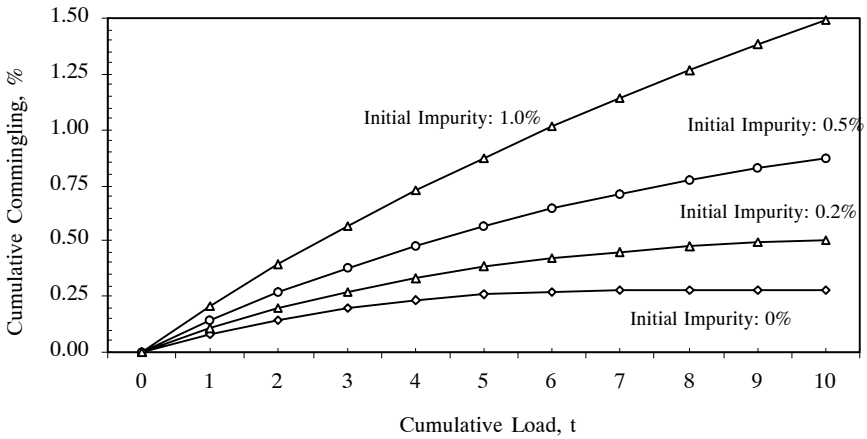

(a) Application 1: Facility with one pit with drag conveyor and one leg.

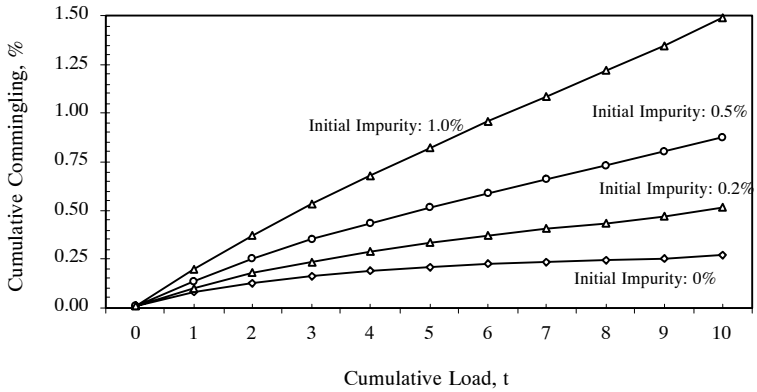

(b) Application 2: Facility with two pits and one leg.

Figure 6. Predicted cumulative commingling values of grain with different initial impurities at 50:50 load-ratio combination.

same receiving path would significantly reduce the level of grain mixing. Different grain types should not be handled consecutively with the same grain path. Facilities equipped with two or more pits and legs have more flexibility in segregating two or more grain types and in dedicating grain paths for specific grain types. For facilities with limited receiving configurations, appropriate scheduling of incoming grain and thorough facility cleaning between loads are strongly recommended. Although cleaning downtimes may compromise elevator efficiency (Krueger et al., 2000), cleaning is an integral operation in maintaining product integrity. It is also crucial for facilities handling specialty crops with stringent requirements for purity. Flushing to minimize grain mixing is commonly practiced in the feed industry (FAO/WHO, 2001).

Conclusions

This study quantified the amount of commingling during grain transfer operations at a country elevator equipped with two gravity-type receiving pits, one dump pit with a drag conveyor at the bottom, and one bucket elevator with a storage capacity of 22,181 t. In this facility, the following conclusions were drawn:

- At the end the loading process, final values of commingling were 1.31%, 0.30%, and 0.23% for the combined effect of the gravity-type pit and bucket elevator, combined effect of the leg and pit with a drag conveyor, and effect of the bucket elevator, respectively.
- Instantaneous commingling approached initial impurity levels after 7 t of load.
- A flushing time longer than 8 min was needed for this receiving operation using the gravity pit and leg, which reflected an apparent quirk of construction that caused grain to hang up and produced high commingling values.
- The simulation model predicted that an elevator equipped with a bucket elevator and receiving pit with a drag conveyor may produce a final commingling at the end of a 10-t load of at least 0.28%, of which 0.27% is generated at the bucket elevator.
- Simulating a process of loading different grain types one after the other in a 50:50 load ratio with no special cleaning between loads generated the greatest commingling compared with other load combinations.

Acknowledgements

Technical assistance provided by Duane E. Walker, Dennis Tilley, Reynaldo Billate, and the staff of Farmer's

Cooperative Association in Manhattan, Kansas, in setting up the experiments and collecting data was greatly appreciated.

Thanks and appreciation to Dr. Frank Arthur of USDA-ARS, Manhattan, Kansas, and Dr. Donghai Wang of Kansas State University for their valuable comments and criticisms, and Srilaxmi Molugu for technical support in developing the simulation program.

References

Baker, S., T. Herrman, and F. Fairchild. 1997. Capability of Kansas grain elevators to segregate wheat during harvest. Progress Report No. 781. Manhattan, Kans: Kansas Agricultural Experiment Station and Cooperative Extension Service.

Berruto, R., and D. E. Maier. 2001. Analyzing the receiving operation of different types of grain in a commercial elevator with a single pit. *Transactions of the ASAE* 44(3): 631-638.

Bullock, D. S., M. Desquilbet, and E. I. Nitsi. 2000. The economics of non-GMO segregation and identity preservation. Urbana, Ill.: Department of Agricultural and Consumer Economics, University of Illinois.

Food and Agriculture Organization/World Health Organization (FAO/WHO). 2001. Code of practice on good animal feeding. CL 2001/36-AF. Rome, Italy: Codex Alimentarius Commission.

Herrman, T. J., M. Boland, and A. Heishman. 1999. Economic feasibility of wheat segregation at country elevators. In *Proc. 2nd Annu. Natl. Wheat Industry Res. Forum*, 13-16. Washington, D.C.: National Association of Wheat Growers.

Herrman, T. J., S. Baker, and F. J. Fairchild. 2001. Characterization of receiving systems and operating performance of Kansas grain elevators during wheat harvest. *Applied Engineering in Agriculture* 17(1): 77-82.

Herrman, T. J., M. A. Boland, K. Agrawal, and S. R. Baker. 2002. Use of simulation model to evaluate wheat segregation strategies for country elevators. *Applied Engineering in Agriculture* 18(1): 105-112.

Hurburgh, C. R., Jr. 1994. Identification and segregation of high-value soybeans at a country elevator. *J. Am. Oil Chem. Soc.* 71(10): 1073-1078.

Hurburgh, C. R., Jr. 2003. Certification and source verification in the grain-handling industry. Paper presented at the symposium on "Product Differentiation and Market Segmentation in Grain and Oilseeds: Implications for Industry in Transition." Washington, D.C.: Economic Research Service, U.S. Dept. of Agriculture and Farm Foundation.

Ingles, M. E., M. E. Casada, and R. G. Maghirang. 2003. Handling effects on commingling and residual grain in an elevator. *Transactions of the ASAE* 46(6): 1625-1631.

Kansas Grain and Feed Association. 2002. *Kansas Official Directory.* Topeka, Kans.: Kansas Grain and Feed Association.

King, H. 1995. Re-engineering yesterday's country elevator to meet today's needs. Paper presented at the 66th Annual International Technical Conference and Exposition of the Grain Elevator and Processing Society. March. Seattle, Wash.

Krueger, A., F. Dooley, R. Berruto, and D. Maier. 2000. Risk-management strategies for grain elevators handling identity-preserved grains. Paper presented at the International Food and Agribusiness Management Association (IAMA) World Food and Agribusiness Congress. June. Chicago, Ill. Available at: www.ifama.org. Accessed 30 October 2004.

Law, A. M., and W. D. Kelton. 1991. *Simulation Modeling & Analysis.* New York: McGraw-Hill, Inc.

Lin, W., W. Chambers, and J. Harwood. 2002. Biotechnology: U.S. grain handlers look ahead. *Agricultural Outlook* AGO-270: 29-34.

Maltsbarger, R., and N. Kalaitzandonakes. 2000. Direct and hidden costs in identity-preserved supply chains. *AgBioForum* 3(4): 236-242.

Misra, M. K. 1986. Conveyors for bulk handling of seed. Pm-1026. Ames, Iowa: Iowa State University Cooperative Extension.

Nielsen, R. L., and D. E. Maier. 2001. GMO issues facing Indiana farmers in 2001. Grain Quality Task Force Fact Sheet #46. 4 April. West Lafayette, Ind.: Purdue University. Available at: http://www.agcom.purdue.edu/AgCom/Pubs/grain.htm. Accessed 30 October 2004.

Pesticide Education Resources. 1999. U.S. elevators not segregating grain now, but eye future. *The Label* 11(10): 30 Sept. Lincoln, Nebr.: Cooperative Extension, University of Nebraska. Available at: http://pested.unl.edu/thelabel/tloct99.htm. Accessed 30 October 2004.

Sargent, R. G. 1999. *Validation and Verification of Simulation Models, Proc. of the 1999 Winter Simulation Conference.* New York: Institute of Electrical and Electronics Engineers.

USDA-GIPSA. 1997. *Grain Inspection Handbook, Book II.* Washington, D.C.: USDA – Grain Inspection, Packers, and Stockyards Administration.

USDA-GIPSA. 2001. Grain sampling procedures. Kansas City, Mo.: USDA – Grain Inspection, Packers, and Stockyards Administration, Technical Services Division.

Wheeler, J. 1998. An overview of grain segregation issues. Agriculture and Agri-Food Canada, Policy Development and Program Services, November. Available at: www.agr.gc.ca/mad-dam/e/winne/segre1e.pdf. Accessed 30 October 2004.